MOTION TECHNOLOGIES PTY LTD

SERVO COUPLINGS

A coupling is a mechanical device linking two co-axial shafts to allow for forward and reverse drive with a safe torque rating. Typically coupling devices can be classified into 2 types, flexible and rigid coupling devices. When shafts are driven it is difficult or impossible for both axis to be perfectly aligned so use of a flexible coupling allows the assembly of both axis to be quite simple, such a situation fits to the flexible coupling device.

Flexible coupling devices provide impact buffering, parallel stress absorption, compensation for deviating angles and axial phase difference. Thus, with assembly deviation between two shafts, the shaft will not be preloaded beyond the shaft or bearings stress allowance.

For rigid coupling devices there is no compensation for eccentric movement or deviating angles because the coupling and the shafts become a solid one piece unit. Therefore, the concentricity and mounting accuracy needs to be extremely high for a practical application.

FLEXIBLE COUPLING

Model	SCT	SCT-C	SCTS	SCTS-C	SCP	SWS	SWS-C	SWSS	SWSS-C	SRJ	SRJ-C
Material	Aluminium	Aluminium	S/Steel	S/Steel	Plastic	Aluminium	Aluminium	S/Steel	S/Steel	Aluminium	Aluminium
Locking Style	Set Screw	Clamp	Set Screw	Clamp	Set Screw	Set Screw	Clamp	Set Screw	Clamp	Set Screw	Clamp
High Torque	√	√	√	√		√	√	√	√	√	√
Low Inertia	√	√	√	√	√	√	√	√	√	√	√
Zero Backlash	√	√	√	√	√	√	√	√	√		
High Rigidity			√	√				√	√	√	√
High Insulation					√					√	√
Corrosion Resistance			√	√	√			√	√		
Anti Vibration										√	√
High Eccentric											
High Deflection	√	√			√	√	√	√		√	√
Page	6	8	6	8	10	11	12	11	12	13	14

Model	SRJS	SMT	SMT-C	SGH-C	SGS-C	SGL-C	SGB-C	SGM-C	SGW-C	SOT	SOT-C
Material	Steel	Aluminium	Aluminium	Aluminium	Aluminium	Aluminium	Aluminium	Aluminium	Aluminium	Aluminium	Aluminium
Locking Style	Set Screw	Set Screw	Clamp	Clamp	Clamp	Clamp	Clamp	Clamp	Clamp	Set Screw	Clamp
High Torque	√			√	√	√	√	√	√	√	√
Low Inertia	√	√	√	√	√	√	√	√	√	√	√
Zero Backlash		√	√	√	√	√	√	√	√		
High Rigidity	√			√	√	√	√	√	√	√	√
High Insulation	√									√	√
Corrosion Resistance											
Anti Vibration	√									√	√
High Eccentric		√	√							√	√
High Deflection		√	√	√	√	√	√	√	√	√	√
Page	15	16	17	18	19	20	21	22	23	24	25

RIGID COUPLING

Model	SCG	SCG-C	SCGS	SCGS-C	CP-A	CP-C
Material	Aluminium	Aluminium	S/Steel	S/Steel	Steel	
Locking Style	Set Screw	Clamp	Set Screw	Clamp	Set Screw	Keyless
High Torque	√	√	√	√	√	√
Low Inertia	√	√	√	√	√	√
Zero Backlash	√	√	√	√	√	√
High Rigidity	√	√	√	√	√	√
High Insulation						
Corrosion Resistance						
Anti Vibration					√	√
High Eccentric						
High Deflection					√	√
Page	26	27	26	27	28	29

Features

The Option Requirement of Coupling Devices:

According to the mechanic featrues and system atic operation, we can select the fitting types of coupling devices:

1. Torque Value:The coupling torque value shall be two times as many as that of driven torque. For example, if the driven torque is trated at 5N.m , the option for coupling torque must be rated at 10 N.m. As for the materials, the steel will fits to this device much better.

2. Flex / Rigidity: The flexible coupling devices is featured with the capability of parallel stress absorption, deviating angles, and axial phase difference, while the rigid type doest come with the foresaid features, and thus,the later one shall be designed with the extreme high accuracy on the axial ends.

3. Applicable Condition(High & Low Temperature, Acid and Alkali Conditions...): It is required to carefully inspect if the material of coupling devices is resistible from the conditions of low/hing temperature and acid/ alkali attack.

4. If there is any back gap left ?
5. Insulation
6. Vibration Resistance
7. The Allowable Maxim RPM

Linkage of Coupling Devices:

1. Fastened Bolts(Figure 1) : It is fastened with 4 bolts respectively at the angles of 120°or 90° to be set on the axial core. The design is handy but the surface of axial core will be left with the stressing traces of bolts; it will easily cause the bolt loosen off under long-time gyration and mechanic impact. But, it is merited with space consuming and affordable prices.

2. Clipped (Figure 2) : Both rims of coupling devices are designed with the grooves for mechanic flexibility ; also, both sides of clipped axes are inserted with 3 or 6 hexagon-head bolts. It is quite handy to dismantle without the worry to damage the axial core but assuring the better stability and grip.

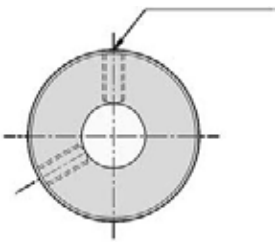

Set screw type

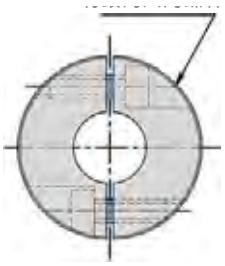

Clamp type

Coupling guide

- Each type of coupling device is designed with the aperture diameters of various criteria.
- The transferring with strong horsepower can be designed with the coupling devices or specially processed key grooves toprevent from any sliding. In coordination with the demand of axialcore, it fits to the coupling devices of 32mm outer diameter above.
- As for the allowance, please refer to the specification.
- Installation Precaution : Under installation , the abnormally large vibration, disorder operation, deviating cores or overload deviating angles(refer to the load values of each specification) are frequently caused by improper coupling and it will subsequently cause damages to motors and coupling devices. It is highly recommended that the special attention must be paid to the mechanical assemblies with the focus onto calibration for accuracy and balance, so as to elongate the service expectancy of machinery.

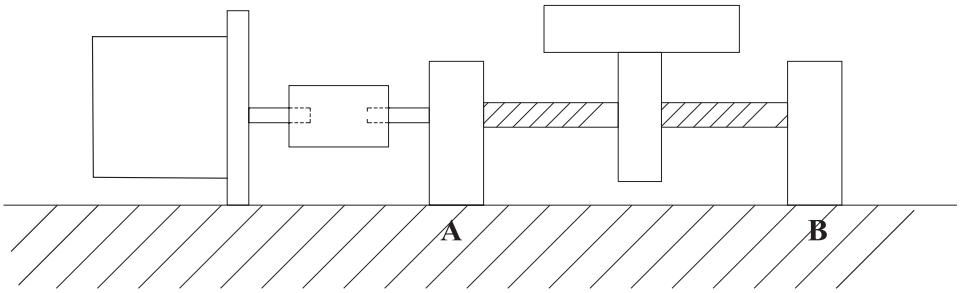

Glossary :

Parallel Deviation: The deviation distance on the midst caused when two couplings are linked.

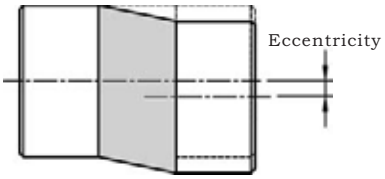

Angle Deviation: The deviation between axes caused when two couplings are linked.

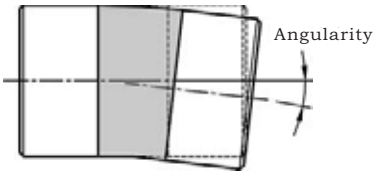

Axial Displacement: The axial direction displacement caused when two couplings are linked.

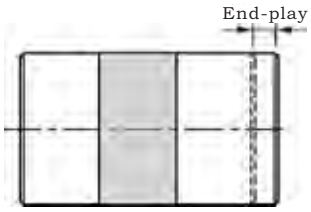

SCT

SCT SCTS

Material

SCT	Aluminum alloy
SCTS	Stainless steel

Features

- One-body shape
- Zero backlash
- High rigid
- Light and landy zero contamination
- Suitable to ENCODER，transfer of low horsepower
- High deflection
- Fixed mode:Set screw type

ProductNO:

SCT-20-ø5xø5

Type — Inside dia

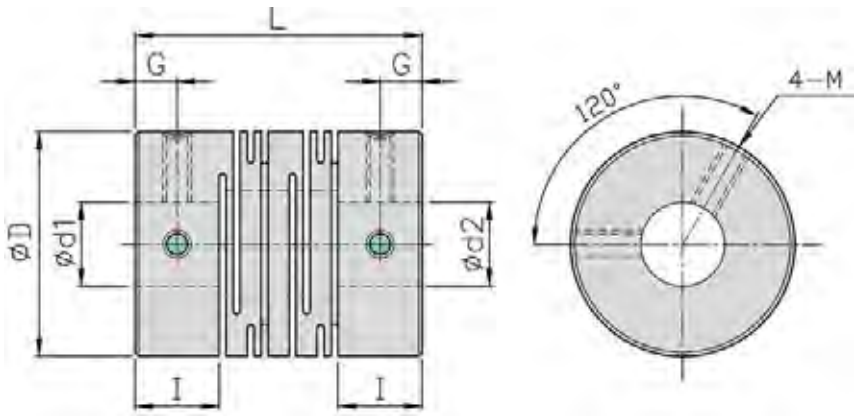

Dimension

Unit:mm

Catalog Number 型號	D	I	L	G	M	d1xd2 標準孔徑 公差(H7) Min	Max	Mass** 重量 (g)
SCT-8	8	3.5	14.0	1.7	M2	2	4	1.3
SCT-12	12	5.0	18.5	2.5	M2.5	3	6	4.5
SCT-16	16	6.5	23.0	3.0	M3	4	8	9.5
SCT-20	20	7.5	26.0	3.0	M4	5	10	16.0
SCT-25	25	8.5	31.0	4.0	M4	5	12	30.0
SCT-32	32	12.0	41.0	6.0	M5	6	14	65.0
SCT-40	40	15	56.0	8.5	M5	8	20	120.0
SCT-50	50	18	71.0	10.5	M6	12	25	230.0
SCT-63	63	22	90.0	13.0	M8	15	35	470.0
SCTS-12	12	5	18.5	2.5	M2.5	3	6	14.0
SCTS-16	16	6.5	23.0	3.0	M3	4	8	28.0
SCTS-20	20	7.5	26.0	3.0	M4	5	10	45.0
SCTS-25	25	8.5	31.0	4.0	M4	6	12	95.0
SCTS-32	32	12	41.0	6.0	M5	6	14	220.0
SCTS-40	40	15	56.0	8.5	M5	8	20	350.0
SCTS-50	50	18	71.0	10.5	M6	12	25	700.0
SCTS-63	63	22	90.0	13.0	M8	15	35	1300.0

Specifications

Catalog Number 型號	Rated Torque 一般扭力 (N.m)	Max. Torque 最大扭力 (N.m)	Max Rotational Frequency 最高回轉速 (Rpm/min)	Moment* of Inertia 慣性 (Kg・m²)	Static Tortional Stiffness 剛性靜扭力值 (N.m/rad)	Errors of Eccentricity 容許偏心 (mm)	Errors of Angularity 容許偏角 (°)	Errors of Shaft End-Play 容許軸向位差 (mm)
SCT-8	0.1	0.2	48000	$1.2x10^{-8}$	25	0.10	2	±0.2
SCT-12	0.2	0.4	32000	$8.3x10^{-8}$	35	0.10	2	±0.3
SCT-16	0.3	0.6	24000	$3.3x10^{-7}$	47	0.10	2	±0.4
SCT-20	0.5	1.0	19000	$9.0x10^{-7}$	120	0.10	2	±0.4
SCT-25	1.0	2.0	15000	$2.6x10^{-6}$	170	0.15	2	±0.5
SCT-32	2.0	4.0	12000	$9.6x10^{-6}$	280	0.15	2	±0.5
SCT-40	5.0	10.0	9600	$3.2x10^{-5}$	350	0.20	2	±0.5
SCT-50	10.0	20.0	7700	$1.0x10^{-4}$	590	0.20	2	±0.5
SCT-63	20.0	40.0	6100	$3.2x10^{-4}$	850	0.20	2	±0.5
SCTS-12	0.3	0.6	32000	$2.1x10^{-7}$	64	0.10	2	±0.3
SCTS-16	0.5	1.0	24000	$8.4x10^{-7}$	85	0.10	2	±0.3
SCTS-20	1.0	2.0	19000	$2.4x10^{-6}$	250	0.10	2	±0.3
SCTS-25	2.0	4.0	15000	$6.8x10^{-6}$	330	0.15	2	±0.4
SCTS-32	3.5	7.0	12000	$2.6x10^{-5}$	850	0.15	2	±0.5
SCTS-40	8.0	16.0	9600	$8.7x10^{-5}$	1000	0.20	2	±0.5
SCTS-50	15.0	30.0	7700	$2.7x10^{-4}$	1400	0.20	2	±0.5
SCTS-63	35.0	70.0	6100	$8.4x10^{-4}$	1800	0.20	2	±0.5

Stock Bores

/Unit:mm

Catalog Number	Stock Bores d1xd2(H7)													
	2	3	4	5	6	6.35	8	9.525	10	12	14	15	16	18
SCT-8	●	●	●											
SCTS-8														
SCT-12		●	●	●	●									
SCTS-12		●	●	●	●									
SCT-16			●	●	●	●	●							
SCTS-16				●	●	●	●							
SCT-20				●	●	●	●	●	●					
SCTS-20				●	●	●	●	●	●					
SCT-25				●	●	●	●	●	●	●				
SCTS-25					●	●	●	●	●	●				
SCT-32					●	●	●	●	●	●	●			
SCTS-32					●	●	●	●	●	●	●			
SCT-40							●		●	●	●	●	●	
SCTS-40							●		●	●	●	●	●	●
SCT-50										●	●	●	●	●
SCTS-50										●	●	●	●	●
SCT-63											●	●	●	●
SCTS-63											●	●	●	●

SCT-C SCTS-C

SCT

Material

SCT	Aluminum alloy
SCTS	Stainless steel

Features

- One-body shape
- Zero backlash
- High rigid
- Light and landy zero contamination
- Suitable to ENCODER，transfer of low horsepower
- High deflection
- Fixed mode:Clamp type

ProductNO:

SCT-20C -⌀5x⌀5

Type — Inside dia

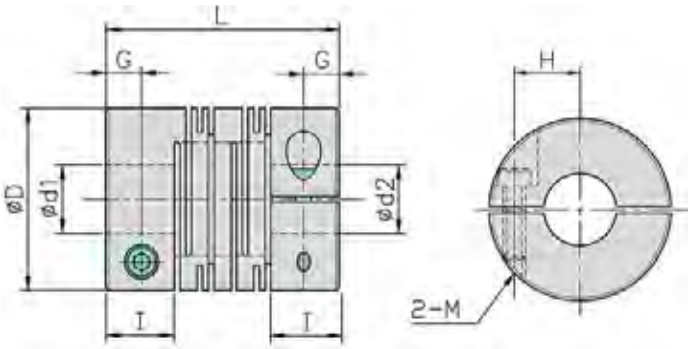

⌀D12~⌀D32

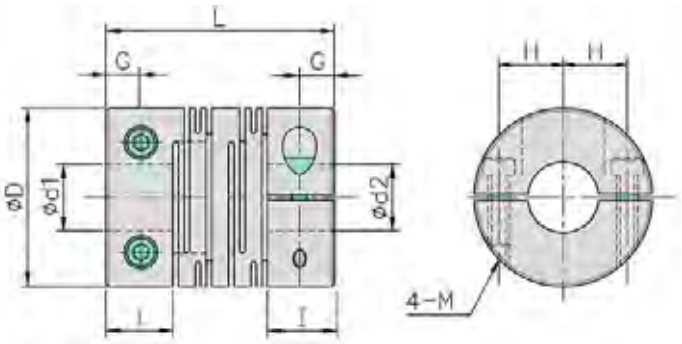

⌀D40~⌀D63

Dimension /Unit:mm

Catalog Number 型號	D	I	L	G	H	M	d1xd2 標準孔徑 公差(H7) Min	Max	Mass** 重 量 (g)
SCT-12C	12	5.0	18.5	2.5	4.0	M2	3	5	3.6
SCT-16C	16	6.5	23.0	3.25	5.0	M2.5	4	6	9.2
SCT-20C	20	7.5	26.0	3.75	6.5	M3	4	8	16.0
SCT-25C	25	8.5	31.0	4.25	9.0	M3	5	10	28.0
SCT-32C	32	12.0	41.0	6.0	11.0	M4	6	14	64.0
SCT-40C	40	15.0	56.0	8.5	14.0	M5	8	16	140.0
SCT-50C	50	18.0	71.0	10.5	18.0	M6	12	22	270.0
SCT-63C	63	22.0	90.0	13.0	24.0	M8	14	35	530.0
SCTS-12C	12	5.0	18.5	2.5	4.0	M2	3	5	10.0
SCTS-16C	16	6.5	23.0	3.25	5.0	M2.5	4	6	25.0
SCTS-20C	20	7.5	26.0	3.75	6.5	M3	5	8	43.0
SCTS-25C	25	8.5	31.0	4.25	9.0	M3	6	10	78.0
SCTS-32C	32	12.0	41.0	6.0	11.0	M4	8	14	170.0
SCTS-40C	40	15.0	56.0	8.5	14.0	M5	8	16	370.0
SCTS-50C	50	18.0	71.0	10.5	18.0	M6	12	22	750.0
SCTS-63C	63	22.0	90.0	13.0	24.0	M8	14	35	1400.0

Specifications

Catalog Number 型號	Rated Torque 一般扭力 (N.m)	Max. Torque 最大扭力 (N.m)	Max Rotational Frequency 最高回轉速 (Rpm/min)	Moment* of Inertia 慣性 (Kg・m^2)	Static Tortional Stiffness 剛性靜扭力值 (N.m/rad)	Errors of Eccentricity 容許偏心 (mm)	Errors of Angularity 容許偏角 (°)	Errors of Shaft End-Play 容許軸向位差 (mm)
SCT-12C	0.2	0.4	12000	7.8×10^{-8}	35	0.10	2	±0.3
SCT-16C	0.3	0.6	9500	3.4×10^{-7}	47	0.10	2	±0.4
SCT-20C	0.5	1.0	7600	9.1×10^{-7}	120	0.10	2	±0.4
SCT-25C	1.0	2.0	6100	2.6×10^{-6}	170	0.15	2	±0.5
SCT-32C	2.0	4.0	4800	9.7×10^{-6}	280	0.15	2	±0.5
SCT-40C	5.0	10.0	3800	3.3×10^{-5}	350	0.20	2	±0.5
SCT-50C	10.0	20.0	3100	1.0×10^{-4}	590	0.20	2	±0.5
SCT-63C	20.0	40.0	2400	3.2×10^{-4}	850	0.20	2	±0.5
SCTS-12C	0.3	0.6	12000	2.2×10^{-7}	64	0.10	2	±0.2
SCTS-16C	0.5	1.0	9500	9.0×10^{-7}	85	0.10	2	±0.3
SCTS-20C	1.0	2.0	7600	2.5×10^{-6}	250	0.10	2	±0.3
SCTS-25C	2.0	4.0	6100	7.1×10^{-6}	330	0.15	2	±0.4
SCTS-32C	3.5	7.0	4800	2.7×10^{-5}	850	0.15	2	±0.5
SCTS-40C	8.0	16.0	3800	9.0×10^{-5}	1000	0.20	2	±0.5
SCTS-50C	15.0	30.0	3100	2.8×10^{-4}	1400	0.20	2	±0.5
SCTS-63C	35.0	70.0	2400	8.8×10^{-4}	1800	0.20	2	±0.5

Stock Bores

/Unit:mm

Catalog Number 型號	Stock Bores d1xd2(H7)													
	2	3	4	5	6	6.35	8	9.525	10	12	14	15	16	18
SCT-12C		●	●	●										
SCTS-12C		●	●	●										
SCT-16C			●	●	●	●								
SCTS-16C			●	●	●	●								
SCT-20C			●	●	●	●	●							
SCTS-20C				●	●	●	●							
SCT-25C				●	●	●	●	●	●					
SCTS-25C					●	●	●	●	●					
SCT-32C							●	●	●	●	●			
SCTS-32C							●	●	●	●	●			
SCT-40C							●	●	●	●	●	●	●	
SCTS-40C							●	●	●	●	●	●	●	
SCT-50C										●	●	●	●	●
SCTS-50C										●	●	●	●	●
SCT-63C											●	●	●	●
SCTS-63C											●	●	●	●

SCP

SCP

Material

Plastic /black&white

Features

- One-body shape
- Zero backlash
- Resistion acid and basic
- High insulation
- High deflection
- Suitable to Encoder
- The workable temperatures within 70℃
- Fixed mode:Set screw type

ProductNO:

SCP-20 - ø6xø6

/ Type / Inside dia

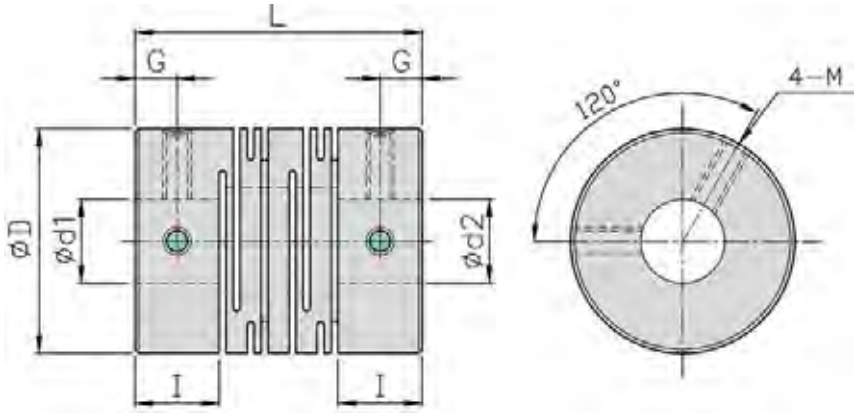

Dimension

/Unit:mm

Catalog Number 型號	D	I	L	G	M	d1xd2 標準孔徑 公差(H7) Min	Max	Mass** 重 量 (g)
SCP-16	16	6.5	23	3	M3	5	8	5
SCP-20	20	7.5	26	3.5	M4	6	8	8
SCP-25	25	8.5	31	4	M4	6	12	15

Specifications

Catalog Number 型號	Rated Torque 一般扭力 (N.m)	Max. Torque 最大扭力 (N.m)	Max Rotational Frequency 最高回轉速 (Rpm/min)	Moment* of Inertia 慣性 (Kg・m²)	Static Tortional Stiffness 剛性靜扭力值 (N.m/rad)	Errors of Eccentricity 容許偏心 (mm)	Errors of Angularity 容許偏角 (°)	Errors of Shaft End-Play 容許軸向位差 (mm)
SCP-16	0.15	0.3	6000	$1.3x10^{-7}$	16	0.2	2.5	±0.3
SCP-20	0.25	0.5	8000	$4.0x10^{-7}$	28	0.2	2.5	±0.3
SCP-25	0.5	1.0	10000	$10.0x10^{-7}$	35	0.2	2.5	±0.3

SWS SWSS

ProductNO:

SWS-20 -ø6xø6

/Type /Inside dia

Material

SWS	Aluminum alloy
SWS	Stainless steel

Features

- One-body shape
- Zero backlash
- High rigid
- High deflection
- Suitable to Encoder，transfer of low hor sepower
- Fixed mode:Set screw type

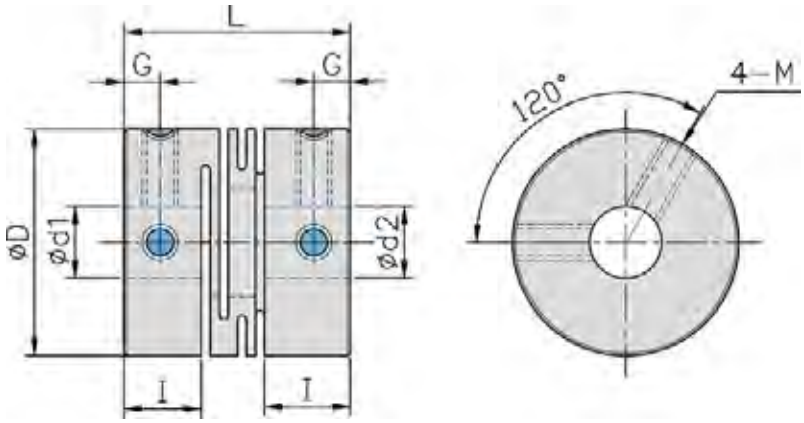

Dimension

/Unit:mm

Catalog Number 型號	D	I	L	G	M	d1xd2 標準孔徑 公差(H7) Min	Max	Mass** 重量 (g)
SWS-16	16	6.8	18	3	M3	5	6	7.4
SWS-20	20	7.65	20	3	M4	5	10	12
SWS-25	25	9.6	25	4	M4	6	12	24
SWS-32	32	12.6	32	6	M5	6	14	50
SWSS-16	16	6.8	18	3	M3	5	6	18
SWSS-20	20	7.65	20	3	M4	5	10	32
SWSS-25	25	9.6	25	4	M4	6	12	63
SWSS-32	32	12.6	32	6	M5	6	14	130

Specifications

Catalog Number 型號	Rated Torque 一般扭力 (N.m)	Max. Torque 最大扭力 (N.m)	Max Rotational Frequency 最高回轉速 (Rpm/min)	Moment* of Inertia 慣性 (Kg・m²)	Static Tortional Stiffness 剛性靜扭力值 (N.m/rad)	Errors of Angularity 容許偏角 (°)	Errors of Shaft End-Play 容許軸向位差 (mm)
SWS-16	0.3	0.6	24000	$2.8x10^{-7}$	110	1	±0.2
SWS-20	0.5	1	19000	$7.5x10^{-7}$	130	1	±0.2
SWS-25	1	2	15000	$2.3x10^{-6}$	350	1	±0.2
SWS-32	2	4	12000	$8.0x10^{-6}$	650	1	±0.2
SWSS-16	0.5	1	24000	$7.2x10^{-7}$	240	1	±0.1
SWSS-20	1	2	19000	$2.0x10^{-6}$	330	1	±0.1
SWSS-25	2	4	15000	$6.1x10^{-6}$	720	1	±0.2
SWSS-32	3.5	7	12000	$2.1x10^{-5}$	1300	1	±0.2

SWS-C SWSS-C

SWS

Material

SWS	Aluminum alloy
SWSS	Stainless steel

Features

- One-body shape
- Zero backlash
- High rigid
- High deflection
- Suitable to Encoder，transfer of low hor sepower
- Fixed mode:Clamp type

ProductNO:

SWS-20C -ø6xø6

/ Type / Inside dia

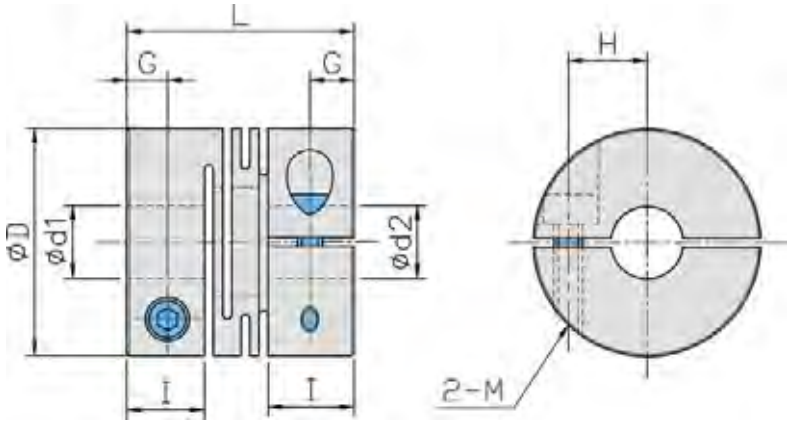

Dimension

/Unit:mm

Catalog Number 型號	D	l	L	G	H	M	d1xd2 標準孔徑 公差(H7) Min	Max	Mass** 重量 (g)
SWS-16C	16	6.8	18	3.4	5	M2.5	5	6	8
SWS-20C	20	7.65	20	3.8	6.5	M3	5	8	13
SWS-25C	25	9.	25	4.8	9	M3	6	10	25
SWS-32C	32	12.6	32	6.3	11	M4	6	14	53
SWSS-16C	16	6.8	18	3.4	5	M2.5	5	6	21
SWSS-20C	20	7.65	20	3.8	6.5	M2.5	5	8	36
SWSS-25C	25	9.6	25	4.8	9	M3	6	10	69
SWSS-32C	32	12.6	32	6.3	11	M4	8	14	150

Specifications

Catalog Number 型號	Rated Torque 一般扭力 (N.m)	Max. Torque 最大扭力 (N.m)	Max Rotational Frequency 最高回轉速 (Rpm/min)	Moment* of Inertia 慣性 (Kg・m^2)	Static Tortional Stiffness 剛性靜扭力值 (N.m/rad)	Errors of Angularity 容許偏角 (°)	Errors of Shaft End-Play 容許軸向位差 (mm)
SWS-16C	0.3	0.6	9500	$2.9x10^{-7}$	110	1	±0.2
SWS-20C	0.5	1.0	7600	$7.5x10^{-7}$	130	1	±0.2
SWS-25C	1.0	2.0	6100	$2.3x10^{-6}$	350	1	±0.2
SWS-32C	2.0	4.0	4800	$8.1x10^{-6}$	650	1	±0.2
SWSS-16C	0.5	1.0	9500	$7.8x10^{-7}$	240	1	±0.2
SWSS-20C	1.0	2.0	7600	$2.1x10^{-6}$	330	1	±0.2
SWSS-25C	2.0	4.0	6100	$6.3x10^{-6}$	720	1	±0.2
SWSS-32C	3.5	7.0	4800	$2.2x10^{-5}$	1300	1	±0.2

SRJ

Material

Aluminum alloy

Features

- High torque
- High rigid
- High vibration resistance
- Suitable to ordinary transferring and cutting demand
- Buffer Material：Engineer class plastic 〈Red〉
- Fixed mode:Set screw type

Product NO:

SRJ-20 -RD-⌀6x⌀6

/ Type / Inside dia

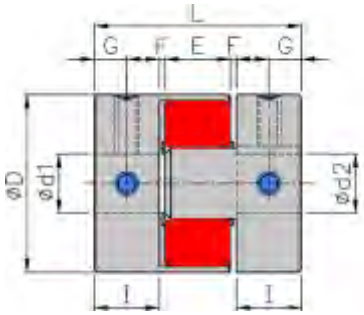

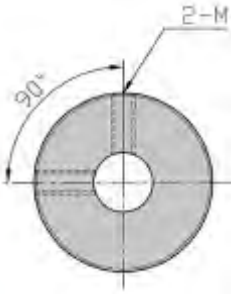

⌀D20~⌀D30

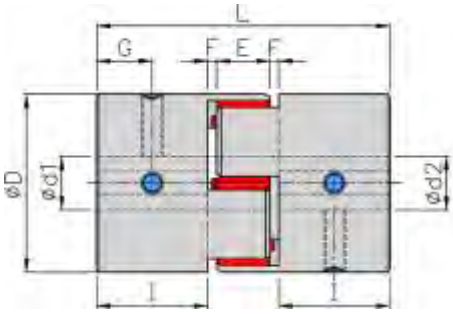

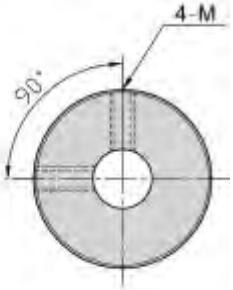

⌀D40~⌀D65

Dimension

/Unit:mm

Catalog Number 型號	D	I	L	E	F	G	M	d1xd2 標準孔徑 公差(H7) Min	Max	Mass** 重量 (g)
SRJ-20-RD	20	10	30	8	1.0	5	M3	5	9.525	18
SRJ-30-RD	30	11	35	10	1.5	5.5	M4	6	14	46
SRJ-40-RD	40	25	66	12	2.0	12.5	M5	8	19	180
SRJ-40S-RD	40	14	42	12	2.0	7.0	M5	8	19	150
SRJ-55-RD	55	30	78	14	2.0	10.0	M6	15	25	350
SRJ-65-RD	65	35	90	15	2.0	17.5	M8	15	35	570

Specifications

Catalog Number 型號	Rated Torque 一般扭力 (N.m)	Max. Torque 最大扭力 (N.m)	Max Rotational Frequency 最高回轉速 (Rpm/min)	Moment* of Inertia 慣性 (Kg・m²)	Static Tortional Stiffness 剛性靜扭力值 (N.m/rad)	Errors of Eccentricity 容許偏心 (mm)	Errors of Angularity 容許偏角 (°)	Errors of Shaft End-Play 容許軸向位差 (mm)
SRJ-20-RD	5	10	19000	$1.0x10^{-6}$	55	0.10	1.0	±0.4
SRJ-30-RD	12.5	25	13000	$5.9x10^{-6}$	130	0.10	1.0	±0.5
SRJ-40-RD	17	34	9600	$4.0x10^{-5}$	1200	0.10	1.0	±0.6
SRJ-40S-RD	17	34	9600	$4.0x10^{-5}$	1200	0.10	1.0	±0.6
SRJ-55-RD	60	120	7000	$1.7x10^{-4}$	2600	0.10	1.0	±0.7
SRJ-65-RD	160	320	5900	$3.9x10^{-4}$	4900	0.10	1.0	±0.75

SRJ-C

SRJ

Material

Aluminum alloy

Features

- High torque
- High rigid
- High vibration resistance
- Suitable to ordinary transferring and cutting demand
- Buffer Material：Engineer class plastic
- Fixed mode:Clamp type

ProductNO:

SRJ-20C - ø6xø6

/ Type / Inside dia

ø D20~ø D30

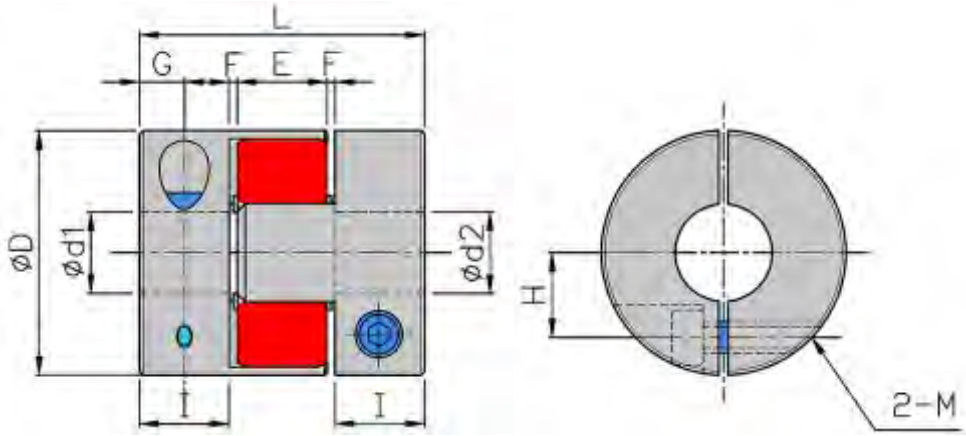

ø D40~ø D65

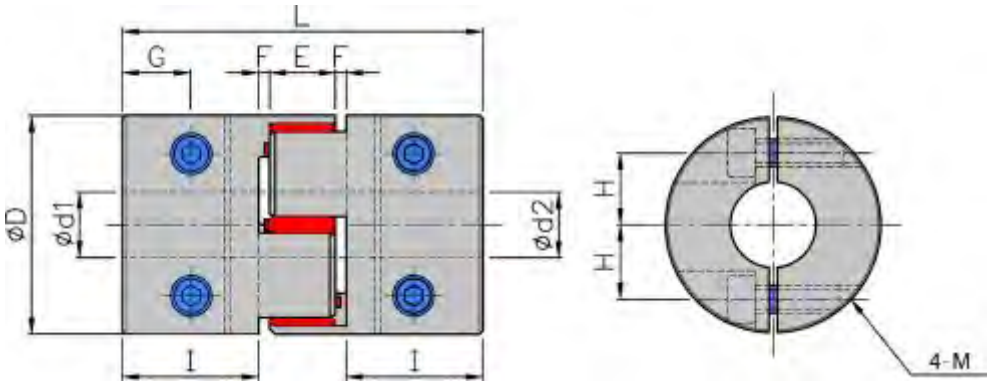

Dimension

/Unit:mm

Catalog Number 型號	D	I	L	E	F	G	H	M	d1xd2 標準孔徑 公差(H7) Min	Max	Mass** 質量 (g)
SRJ-20C-RD	20	10	29	8	1.0	5.0	6.5	M2.5	5	8	19
SRJ-30C-RD	30	11	34	10	1.5	5.5	10.0	M4	6	14	50
SRJ-40C-RD	40	25	66	12	2.0	8.5	14.0	M5	10	19	160
SRJ-55C-RD	55	30	78	14	2.0	10.5	20.0	M6	15	25	330
SRJ-65C-RD	65	35	90	15	2.5	13.0	24.0	M8	15	35	560

Specifications

Catalog Number 型號	Rated Torque 一般扭力 (N.m)	Max. Torque 最大扭力 (N.m)	Max Rotational Frequency 最高回轉速 (Rpm/min)	Moment* of Inertia 慣性 (Kg・m²)	Static Tortional Stiffness 剛性靜扭力值 (N.m/rad)	Errors of Eccentricity 容許偏心 (mm)	Errors of Angularity 容許偏角 (°)	Errors of Shaft End-Play 容許軸向位差 (mm)
SRJ-20C-RD	5.0	10	7600	$1.1x10^{-6}$	55	0.10	1.0	±0.4
SRJ-30C-RD	12.5	25	5100	$6.2x10^{-6}$	130	0.10	1.0	±0.5
SRJ-40C-RD	17.0	34	3800	$3.9x10^{-5}$	1200	0.10	1.0	±0.6
SRJ-55C-RD	60.0	120	2800	$1.6x10^{-4}$	2600	0.10	1.0	±0.7
SRJ-65C-RD	160.0	320	2350	$3.8x10^{-4}$	4900	0.10	1.0	±0.75

SRJS

Material

S45C

Features

- High torque
- High rigid
- High vibration resistance
- Applicable for the ordinary transferring and cutting demand
- Buffer Material :Engineering class Plastic
- Fixed mode:Set screw type

Product NO:

SRJS-80-ø30xø30

/ Type / Inside dia

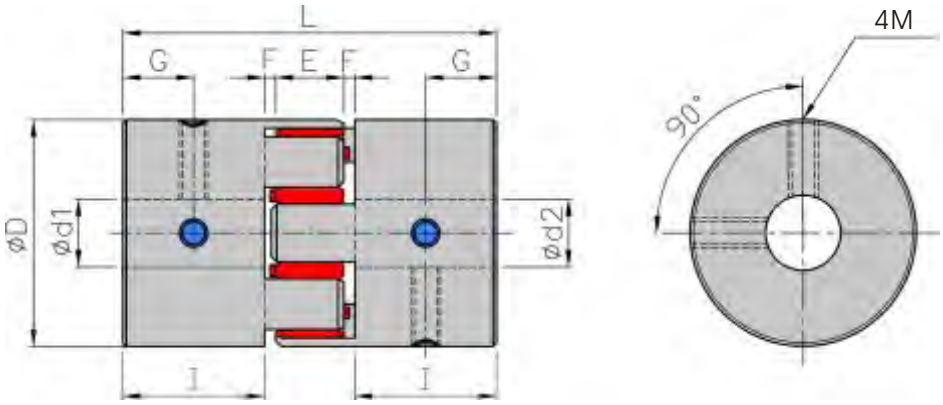

Dimension

/Unit:mm

Catalog Number 型號	D	I	L	E		G	M	d1xd2 標準孔徑 公差(H7) Min	Max	Mass** 重量 (g)
SRJS-80RD	80	45	114	18	3	15	M8	38	45	3800

Specifications

Catalog Number 型號	Rated Torque 一般扭力 (N.m)	Max. Torque 最大扭力 (N.m)	Max Rotational Frequency 最高回轉速 (Rpm/min)	Moment* of Inertia 慣性 (Kg・m²)	Errors of Eccentricity 容許偏心 (mm)	Errors of Angularity 容許偏角 (°)
SRJS-80RD	325	650	470	48.57x10	0.10	3

SMT

SMT

Material

Aluminum alloy

Features

- One-body shape
- Zero backlash
- The groves are shaped spirally with its excellent flexibility
- Suitable to ENCODER
- Fixed mode:Set screw type

ProductNO:

SMT-20 - ⌀6x⌀6

/ Type / Inside dia

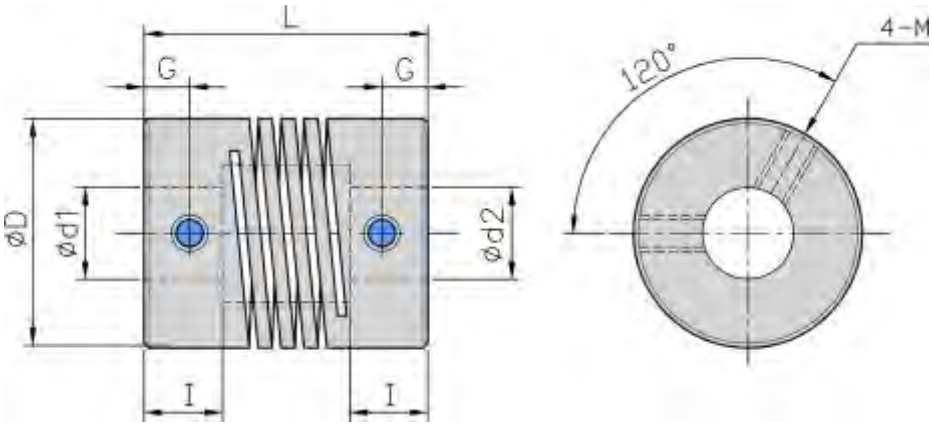

Dimension

/Unit:mm

Catalog Number 型號	D	I	L	G	M	d1xd2 標準孔徑 公差(H7) Min	Max	Mass** 重量 (g)
SMT-16	16	7.6	23	3.5	M3	4	8	10
SMT-16S	16	4.3	16	2.5	M3	4	8	8
SMT-19	19	7	23	3	M3	5	8	13
SMT-19S	19	5	19	3	M3	5	8	11
SMT-20	20	8.6	26	3	M4	6	10	15
SMT-25	25	10.6	31	4	M4	6	12	31
SMT-25S	25	7.5	25	4	M4	6	12	29

Specifications

Catalog Number 型號	Rated Torque 一般扭力 (N.m)	Max. Torque 最大扭力 (N.m)	Max Rotational Frequency 最高回轉速 (Rpm/min)	Errors of Shaft End-Play 容許軸向位差 (mm)	Errors of Eccentricity 容許偏心 (mm)	Errors of Angularity 容許偏角 (°)
SMT-16	0.5	1.0	25000	±0.25	0.25	5
SMT-16S	0.5	1.0	25000	±0.25	0.25	5
SMT-19	1.0	2.0	25000	±0.25	0.25	5
SMT-19S	1.0	2.0	25000	±0.25	0.25	5
SMT-20	1.1	2.2	25000	±0.25	0.25	5
SMT-25	1.6	3.2	25000	±0.25	0.25	5
SMT-25S	1.6	3.2	25000	±0.25	0.25	5

SMT-C

Material

Aluminum alloy

Features

- One-body shape
- Zero backlash
- The groves are shaped spirally with its excellent flexibility
- Suitable to ENCODER
- Fixed mode:Clamp type

Product NO:

SMT-20C - ⌀6x⌀6

/ Type / Inside dia

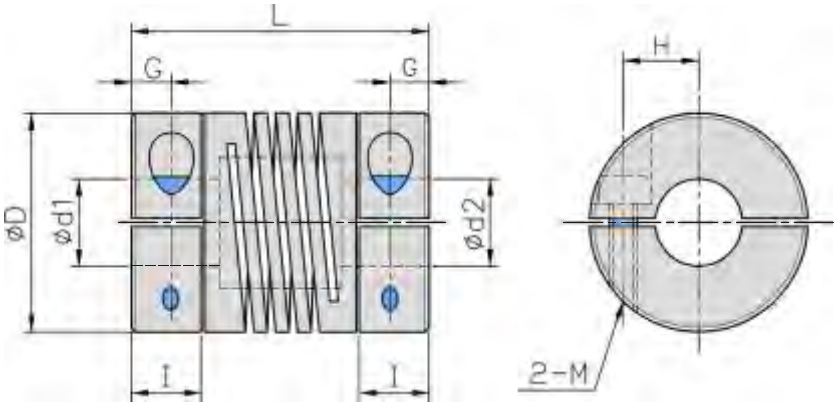

Dimension

/Unit:mm

Catalog Number 型號	D	I	L	G	H	M	d1xd2 標準孔徑 公差(H7) Min	Max	Mass** 重量 (g)
SMT-16C	16	6.2	23	2.5	5.0	M2.5	4	6.35	10
SMT-19C	19	6.5	23	3.0	5.6	M3.0	4	8.0	13
SMT-20C	20	7.5	26	3.0	5.7	M3.0	6	8.0	13
SMT-25C	25	8	31	4.0	7.5	M4.0	6	12.0	31

Specifications

Catalog Number 型號	Rated Torque 一般扭力 (N.m)	Max. Torque 最大扭力 (N.m)	Max Rotational Frequency 最高回轉速 (Rpm/min)	Errors of Shaft End-Play 容許軸向位差 (mm)	Errors of Eccentricity 容許偏心 (mm)	Errors of Angularity 容許偏角 (°)
SMT-16C	0.5	1.0	250000	±0.25	0.25	5
SMT-19C	0.5	1.0	250000	±0.25	0.25	5
SMT-20C	1.0	2.0	250000	±0.25	0.25	5
SMT-25C	1.1	2.2	250000	±0.25	0.25	5

SGH-C

SGH

ProductNO:

SGH-50C -ø15xø15

/ Type / Inside dia

Material

Aluminum alloy

Features

- High-rigid
- High torque
- Low inertia
- Zero backlash
- Suitable to working machinery and it comes with the hi-precision transfer function
- Buffer Material:SUS disk
- Fixed mode:Clamp type

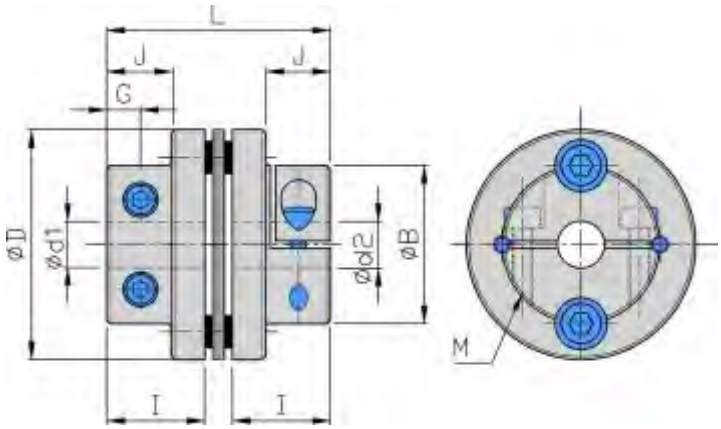

Dimension

/Unit:mm

Catalog Number 型號	D	B	J	I	L	G	M	d1xd2 標準孔徑 公差(H7) Min	Max	Mass** 重量 (g)
SGH-40C	40	28	12	16.5	38	6	M4	8	14	63
SGH-50C	50	39	15	19.4	44	7	M5	12	20	120
SGH-65C	65	45	18	22.3	50	8	M5	15	25	200

Specifications

Catalog Number 型號	Rated Torque 一般扭力 (N.m)	Max. Torque 最大扭力 (N.m)	Max Rotational Frequency 最高回轉速 (Rpm/min)	Moment* of Inertia 慣性 (Kg・m²)	Static Tortional Stiffness 剛性靜扭力值 (N.m/rad)	Errors of Shaft End-Play 容許軸向位差 (mm)	Errors of Angularity 容許偏角 (°)
SGH-40C	6	12	10000	$1.2x10^{-5}$	2800	±0.02	1.0
SGH-50C	17	34	10000	$3.7x10^{-5}$	3700	±0.02	1.0
SGH-65C	58	116	10000	$8.4x10^{-5}$	5000	±0.02	1.0

SGS-C

ProductNO:

SGS-40C -⌀8x⌀8

/ Type / Inside dia

Material

Aluminum alloy

Features

- High-rigid
- High torque
- Low inertia
- Zero backlash
- Suitable to servomotor
- Buffer Material:SUS disk
- Fixed mode:Clamp type

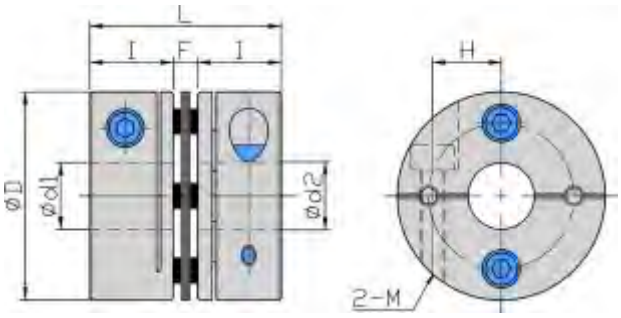

⌀D27~⌀D34

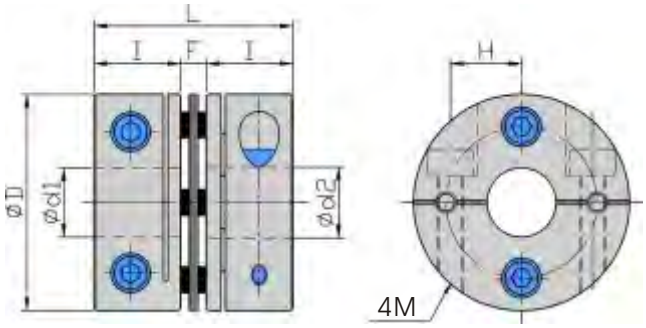

⌀D40~⌀D65

Dimension

/Unit:mm

Catalog Number 型號	D	l	F	L	H	M	d1xd2 標準孔徑 公差(H7) Min	Max	Mass** 重量 (g)
SGS-27C	27	10.5	2.5	23.5	9.0	M3	5	10	30
SGS-34C	34	12.0	3.5	27.5	12.0	M3	6	14	48
SGS-40C	40	15.0	5.0	35.0	13.5	M4	8	16	93
SGS-45C	45	15.0	4.5	35.0	16.0	M4	10	19	110
SGS-50C	50	20.0	6.0	46.0	19.0	M5	10	22	215
SGS-57C	57	20.0	6.0	46.0	21.0	M5	12	25	240
SGS-65C	65	25.0	7.0	57.0	23.0	M6	12	28	445

Specifications

Catalog Number 型號	Rated Torque 一般扭力 (N.m)	Max. Torque 最大扭力 (N.m)	Max Rotational Frequency 最高回轉速 (Rpm/min)	Moment* of Inertia 慣性 (Kg・m^2)	Errors of Eccentricity 容許偏心 (mm)	Errors of Shaft End-Play 容許軸向位差 (mm)	Errors of Angularity 容許偏角 (°)
SGS-27C	1.5	3	10000	$2.5x10^{-6}$	0.02	±0.15	1.0
SGS-34C	6	12	10000	$8.2x10^{-6}$	0.02	±0.2	1.0
SGS-40C	7	14	10000	$19.0x10^{-6}$	0.02	±0.25	1.0
SGS-45C	10	20	10000	$29.7x10^{-6}$	0.02	±0.3	1.0
SGS-50C	17	34	10000	$75.0x10^{-6}$	0.02	±0.3	1.0
SGS-57C	25	50	10000	$100.0x10^{-6}$	0.02	±0.4	1.0
SGS-65C	58	116	10000	$250.0x10^{-6}$	0.02	±0.4	1.0

SGL

SGL-C

Material

Aluminum alloy

Features

- High-rigid
- High torque
- Low inertia
- Zero backlash
- High angularity
- Suitable to small servo transmission
- Buffer Material:SUS disk
- Fixed mode:Clamp type

ProductNO:

SGL-40C - ⌀8x⌀8

/ Type / Inside dia

⌀D27~⌀D34

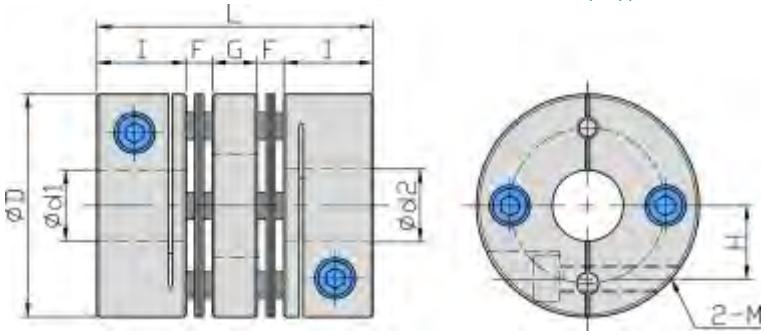

⌀D40~⌀D65

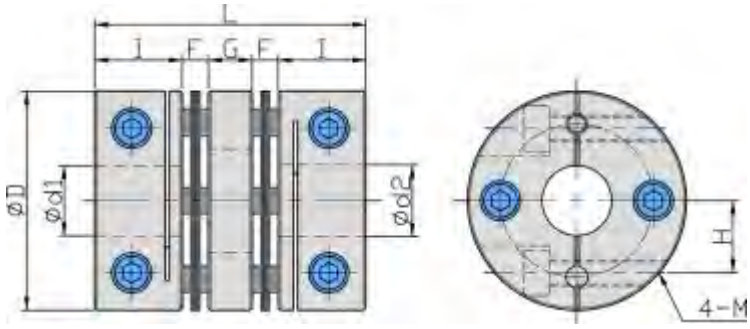

Dimension

/Unit:mm

Catalog Number 型號	D	I	F	G	L	H	M	d1xd2 標準孔徑 公差(H7) Min	Max	Mass** 重量 (g)
SGL-27C	27	10.5	2.5	6	32	9.0	M3	5	10	33
SGL-34C	34	12.0	3.5	7	35	12.0	M3	6	14	58
SGL-40C	40	15.0	5.0	9	48	13.5	M4	8	16	128
SGL-45C	45	15.0	4.8	9	48.6	16.0	M4	10	19	140
SGL-50C	50	20.0	6.0	11	63	18.0	M5	10	22	300
SGL-57C	57	20.0	6.0	11	63	21.0	M5	12	25	310
SGL-65C	65	25.0	7.0	13	77	23.0	M6	12	28	545

Specifications

Catalog Number 型號	Rated Torque 一般扭力 (N.m)	Max. Torque 最大扭力 (N.m)	Max Rotational Frequency 最高回轉速 (Rpm/min)	Moment* of Inertia 慣性 (Kg・m^2)	Errors of Eccentricity 容許偏心 (mm)	Errors of Shaft End-Play 容許軸向位差 (mm)	Errors of Angularity 容許偏角 (°)
SGL-27C	1.5	3	10000	$3.0x10^{-6}$	0.15	±0.33	1
SGL-34C	3	6	10000	$10.5x10^{-6}$	0.17	±0.4	1
SGL-40C	7	14	10000	$26.4x10^{-6}$	0.23	±0.5	1
SGL-45C	10	20	10000	$41.7x10^{-6}$	0.23	±0.6	1
SGL-50C	17	34	10000	$135.0x10^{-6}$	0.23	±0.8	1
SGL-57C	25	50	10000	$144.0x10^{-6}$	0.23	±0.8	1
SGL-65C	58	116	10000	$360.0x10^{-6}$	0.28	±0.9	1

SGB-C

ProductNO:

SGB-50C -⌀20x⌀20

/ Type / Inside dia

Material

Aluminum alloy

Features

- High-torque
- High-rigid
- Low inertia
- Zero backlash
- Suitable to use servomotor
- Buffer Material:SUS disk
- Fixed mode:Clamp type

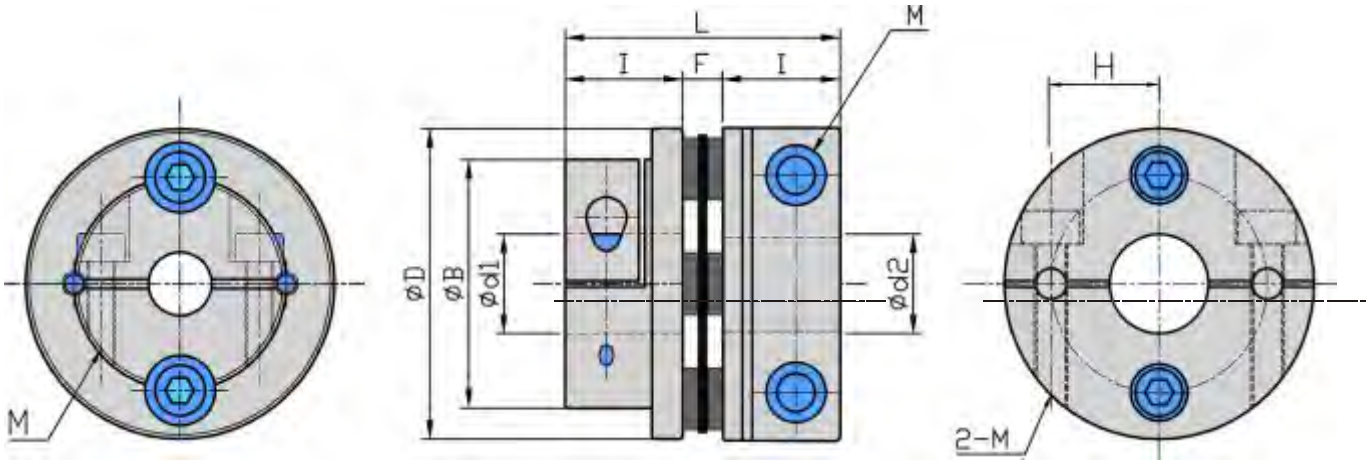

Dimension

/Unit:mm

Catalog Number 型號	D	B	I	F	J	L	d1xd2 標準孔徑 公差(H7) Min	Max	M	Mass** 重量 (g)
SGB-40C	40	28	15	4.5	16.5	36	8	16	3-M4	88
SGB-50C	50	40	20	6.5	19.4	45.9	10	20	3-M5	188
SGB-65C	65	50	25	7	22.3	54.3	12	28	4-M6	368

Specifications

Catalog Number 型號	Rated Torque 一般扭力 (N.m)	Max. Torque 最大扭力 (N.m)	Max Rotational Frequency 最高回轉速 (Rpm/min)	Moment* of Inertia 慣性 (Kg・m^2)	Errors of Shaft End-Play 容許軸向位差 (mm)	Errors of Eccentricity 容許偏心 (mm)	Errors of Angularity 容許偏角 (°)
SGB-40C	6	12	10000	$1.4x10^{-5}$	±0.25	0.02	1
SGB-50C	17	34	10000	$4.2x10^{-5}$	±0.3	0.02	1
SGB-65C	58	116	10000	$1.0x10^{-4}$	±0.4	0.02	1

SGM

SGM-C

Product NO:

SGM-50C - ø20xø20

/ Type / Inside dia

Material

Aluminum alloy

Features

- High torque
- High-rigid
- Low inertia
- Zero backlash
- Suitable to use servomotor
- Buffer Material:SUS disk
- Fixed mode:Clamp type

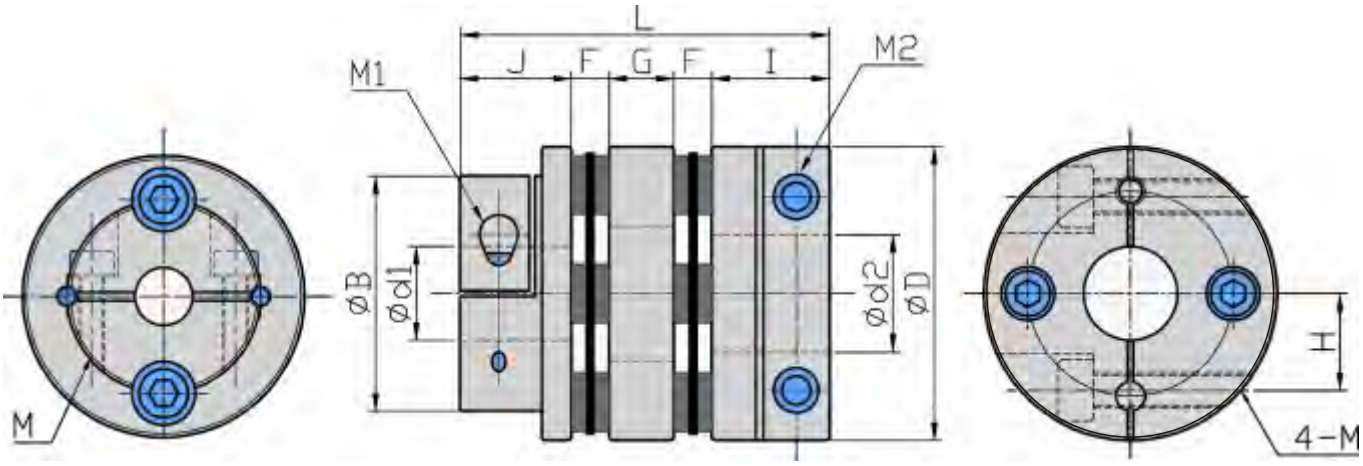

Dimension

/Unit:mm

Catalog Number 型號	D	B	J	F	G	I	L	d1xd2 標準孔徑 公差(H7) Min	Max	M1	M2	Mass** 重量 (g)
SGM-40C	40	28	16.5	4.5	9	15	49.5	8	16	1-M4	2-M4	121
SGM-50C	50	40	19.4	6.5	11	20	63	10	20	1-M5	2-M5	250
SGM-65C	65	50	22.3	7	13	25	74.3	12	28	2-M6	2-M6	510

Specifications

Catalog Number 型號	Rated Torque 一般扭力 (N.m)	Max. Torque 最大扭力 (N.m)	Max Rotational Frequency 最高回轉速 (Rpm/min)	Moment* of Inertia 慣性 (Kg・m²)	Errors of Shaft End-Play 容許軸向位差 (mm)	Errors of Eccentricity 容許偏心 (mm)	Errors of Angularity 容許偏角 (°)
SGM-40C	6	12	10000	$1.4x10^{-5}$	±0.6	0.2	1
SGM-50C	17	34	10000	$4.2x10^{-5}$	±0.8	0.2	1
SGM-65C	58	116	10000	$1.0x10^{-4}$	±0.9	0.3	1

SGW-C

ProductNO:

SGW-50C -⌀20x⌀20

/Type /Inside dia

Material

Aluminum alloy

Features

- High-torque
- High-rigid
- Low inertia
- Zero backlash
- Suitable to use servomotor
- Buffer Material:SUS disk
- Fixed mode:Clamp type

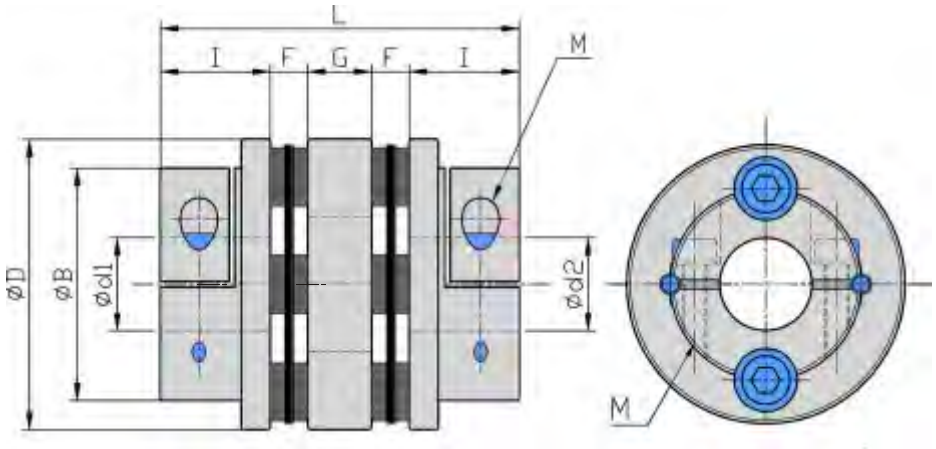

Dimension

/Unit:mm

Catalog Number 型號	D	B	I	F	G	L	d1xd2 標準孔徑 公差(H7) Min	Max	M	Mass** 重量 (g)
SGW-40C	40	28	15	4.5	9	52	8	16	3-M4	188
SGW-50C	50	40	20	6.5	11	62	10	20	3-M5	230
SGW-65C	65	50	24	7	13	71	12	28	4-M6	420

Specifications

Catalog Number 型號	Rated Torque 一般扭力 (N.m)	Max. Torque 最大扭力 (N.m)	Max Rotational Frequency 最高回轉速 (Rpm/min)	Moment* of Inertia 慣性 (Kg・m^2)	Errors of Shaft End-Play 容許軸向位差 (mm)	Errors of Eccentricity 容許偏心 (mm)	Errors of Angularity 容許偏角 (°)
SGW-40C	6	12	10000	$1.4x10^{-5}$	±0.6	0.2	1
SGW-50C	17	34	10000	$4.2x10^{-5}$	±0.8	0.2	1
SGW-65C	58	116	10000	$1.0x10^{-4}$	±0.9	0.3	1

SOT

SOT

Material

Aluminum alloy

Features

- High-rigid
- High insulation
- Handy assembly
- Excellent resistance to oil
- High eccentricity and angularity
- Buffer Material:Engineering class plastic
- Fixed mode:Set screw type

ProductNO:

SOT-40 - ⌀8x⌀8

/ Type / Inside dia

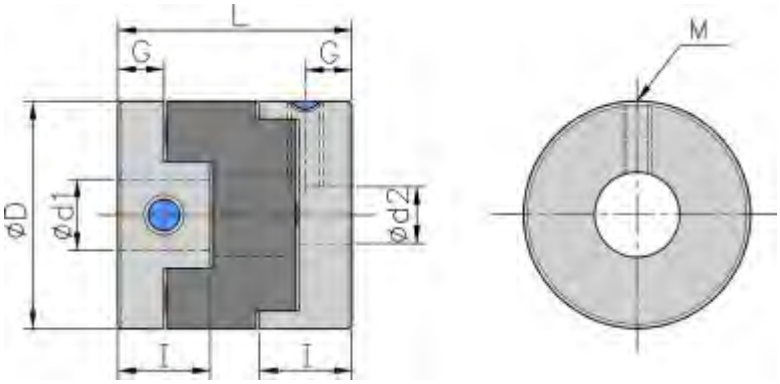

Dimension

/Unit:mm

Catalog Number 型號	D	I	L	G	M	d1xd2 標準孔徑 公差(H7) Min	Max	Mass** 質量 (g)
SOT-16	16	7	18	3.5	M3	4	6.35	7
SOT-20	20	10	22	4.5	M4	5	8	14
SOT-25	25	12	28	5.5	M5	5	10	27
SOT-32	32	14	33	6.5	M6	8	14	50
SOT-40	40	15	35	7.0	M6	10	16	80
SOT-50	50	16.5	38	8.5	M8	14	20	150
SOT-63	63	20.5	47	10.5	M10	15	25	300

Specifications

Catalog Number 型號	Rated Torque 一般扭力 (N.m)	Max. Torque 最大扭力 (N.m)	Max Rotational Frequency 最高回轉速 (Rpm/min)	Moment* of Inertia 慣性 (Kg・m^2)	Static Tortional Stiffness 剛性靜扭力值 (N.m/rad)	Errors of Eccentricity 容許偏心 (mm)	Errors of Angularity 容許偏角 (°)
SOT-16	0.7	1.4	9500	$3.2x10^{-7}$	31	1.0	3
SOT-20	1.2	2.4	7600	$1.0x10^{-6}$	60	1.5	3
SOT-25	2.0	4.0	6100	$3.0x10^{-6}$	140	2.0	3
SOT-32	4.5	9.0	4800	$9.5x10^{-6}$	280	2.5	3
SOT-40	9.0	18.0	3800	$2.3x10^{-5}$	540	3.0	3
SOT-50	18.0	36.0	3100	$6.7x10^{-5}$	820	3.5	3
SOT-63	36.0	72.0	2400	$2.2x10^{-4}$	1900	4.0	3

SOT-C

Material

Aluminum alloy

Features

- High-rigid
- High insulation
- Handy assembly
- Excellent resistance to oil
- High eccentricity and angularity
- Buffer Material:Engineering class plastic
- Fixed mode:Clamp type

ProductNO:

SOT-40C - ⌀8x⌀8

/ Type / Inside dia

⌀D16~⌀D32

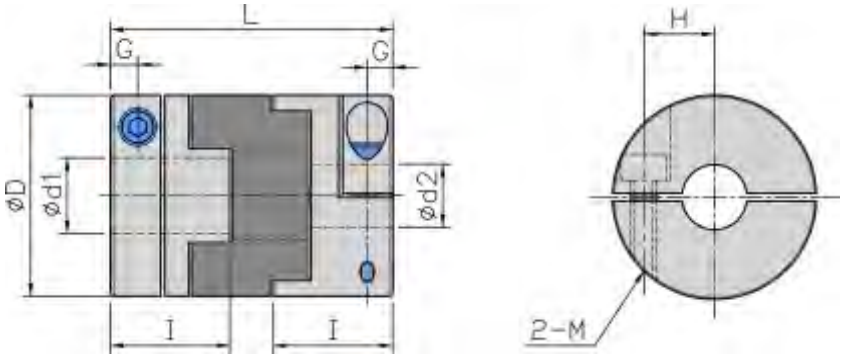

⌀D40~⌀D63

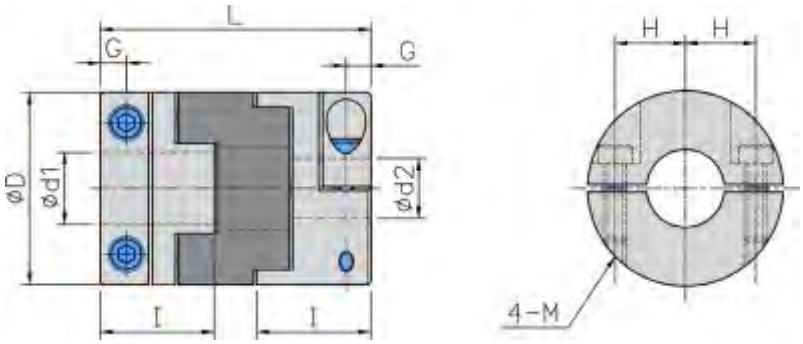

Dimension

/Unit:mm

Catalog Number 型號	D	I	L	G	H	M	d1xd2 標準孔徑 公差(H7) Min	Max	Mass** 重量 (g)
SOT-16C	16	13	29	3.0	5.0	M2.5	4	6.35	12
SOT-20C	20	15	33	3.0	6.5	M3	5	8.0	19
SOT-25C	25	18	39	3.8	9.0	M3	6	10.0	36
SOT-32C	32	20	45	4.5	11.0	M4	6	14.0	69
SOT-40C	40	22.5	50	7.0	13.0	M5	8	16.0	130
SOT-50C	50	26.5	58	8.0	16.0	M6	12	22.0	230
SOT-63C	63	32.5	71	10.0	21.0	M8	15	25.0	450

Specifications

Catalog Number 型號	Rated Torque 一般扭力 (N.m)	Max. Torque 最大扭力 (N.m)	Max Rotational Frequency 最高回轉速 (Rpm/min)	Moment* of Inertia 慣性 (Kg・m^2)	Static Tortional Stiffness 剛性靜扭力值 (N.m/rad)	Errors of Eccentricity 容許偏心 (mm)	Errors of Angularity 容許偏角 (°)
SOT-16C	0.7	1.4	9500	$5.8x10^{-7}$	31	1.0	3
SOT-20C	1.2	2.4	7600	$1.5x10^{-6}$	60	1.5	3
SOT-25C	2.0	4.0	6100	$4.4x10^{-6}$	140	2.0	3
SOT-32C	4.5	9.0	4800	$1.4x10^{-5}$	280	2.5	3
SOT-40C	9.0	18.0	3800	$4.1x10^{-5}$	540	3.0	3
SOT-50C	18.0	36.0	3100	$1.2x10^{-5}$	820	3.5	3
SOT-63C	36.0	72.0	2400	$3.7x10^{-4}$	1900	4.0	3

SCG

SCG SCGS

Material

SCG	Aluminum alloy
SCGS	Stainless steel

Features

- One-body shape
- Super high rigid
- High torque
- Low inertia
- Fixed mode:Set screw type

ProductNO:

SCG-20 -ø6xø6

/ Type / Inside dia

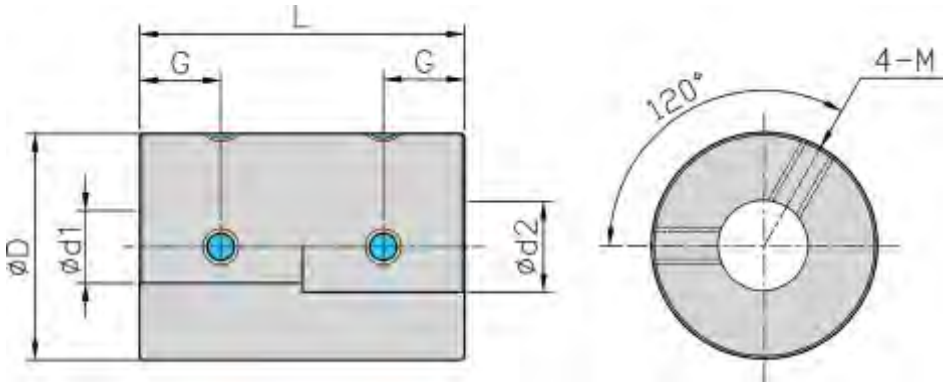

Dimension

/Unit:mm

Catalog Number 型號	D	L	G	M	d1xd2 標準孔徑 公差(H7) Min	Max	Mass** 重量 (g)
SCG-16	16	24	6	M3	5	8	11
SCG-20	20	30	7	M4	6	10	20
SCG-25	25	36	9	M4	6	12	39
SCG-32	32	41	10	M5	8	16	71
SCGS-16	16	24	6	M3	5	8	31
SCGS-20	20	30	7	M4	6	10	53
SCGS-25	25	36	9	M4	6	12	105
SCGS-32	32	41	10	M5	8	16	190

Specifications

Catalog Number 型號	Rated Torque 一般扭力 (N.m)	Max. Torque 最大扭力 (N.m)	Max Rotational Frequency 最高回轉速 (Rpm/min)	Moment* of Inertia 慣性 (Kg・m^2)
SCG-16	0.3	0.6	24000	$4.4x10^{-7}$
SCG-20	0.5	1.0	19000	$1.3x10^{-6}$
SCG-25	1.0	2.0	15000	$3.9x10^{-6}$
SCG-32	2.0	4.0	12000	$1.2x10^{-5}$
SCGS-16	0.3	0.6	24000	$1.2x10^{-6}$
SCGS-20	0.5	1.0	19000	$3.5x10^{-6}$
SCGS-25	1.0	2.0	15000	$1.0x10^{-5}$
SCGS-32	2.0	4.0	12000	$3.1x10^{-5}$

SCG-C SCGS-C

Material

SCG ..... Aluminum alloy
SCGS Stainless steel

Product NO:
SCG-20C - ⌀6x⌀6
/ Type / Inside dia

特 性 Features

- One-body shape
- Super high rigid
- High torque
- Low inertia
- Fixed mode:Set screw type

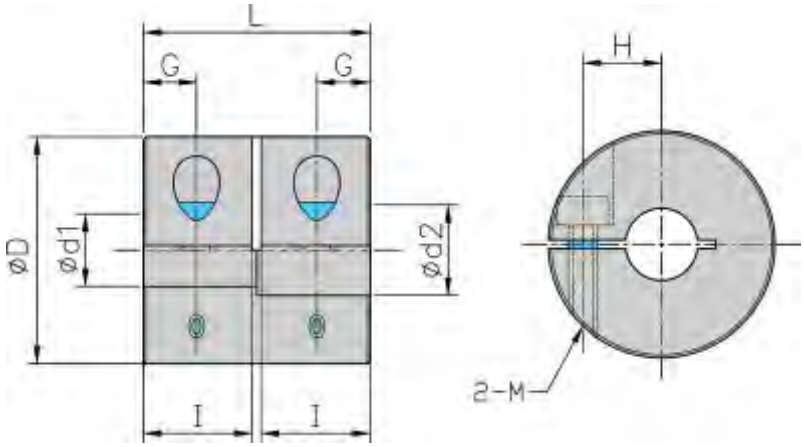

Dimension

/Unit:mm

Catalog Number 型號	D	I	L	G	H	M	d1xd2 標準孔徑 公差(H7) Min	Max	Mass** 重量 (g)
SCG-16C	16	7.5	16	3.75	5	M2.5	5	6	11
SCG-20C	20	9.5	20	4.75	6.5	M3	6	8	20
SCG-25C	25	12	25	6	9	M4	6	10	39
SCG-32C	32	15.5	32	7.75	11	M4	8	14	71
SCGS-16C	16	7.5	16	3.75	5	M2.5	5	6	31
SCGS-20C	20	9.5	20	4.75	6.5	M3	6	8	53
SCGS-25C	25	12	25	6	9	M4	6	10	85
SCGS-32C	32	15.5	32	7.75	11	M4	8	14	190

Specifications

Catalog Number 型號	Rated Torque 一般扭力 (N.m)	Max. Torque 最大扭力 (N.m)	Max Rotational Frequency 最高回轉速 (Rpm/min)	Moment of Inertia 慣性 (Kg・m²)
SCG-16C	0.3	0.6	9500	$3.0x10^{-7}$
SCG-20C	0.5	1	7600	$8.7x10^{-7}$
SCG-25C	1	2	6100	$2.7x10^{-6}$
SCG-32C	2	4	4800	$7.1x10^{-6}$
SCGS-16C	0.3	0.6	9500	$8.0x10^{-7}$
SCGS-20C	0.5	1	7600	$2.4x10^{-6}$
SCGS-25C	1	2	6100	$7.3x10^{-6}$
SCGS-32C	2	4	4800	$2.5x10^{-5}$

CP-A

CP-A

Material

S45C

Surface Treatment

Dye black

Features

- High torque、high rigid
- Low inertia、Zero backlash
- Suitable to middling large servomotor
- In generally with keyway process
- Buffer Material:SUS disk
- Fixed mode:Set screw type

Product NO:

CP-82A - ⌀20x⌀20

/ Type / Inside dia

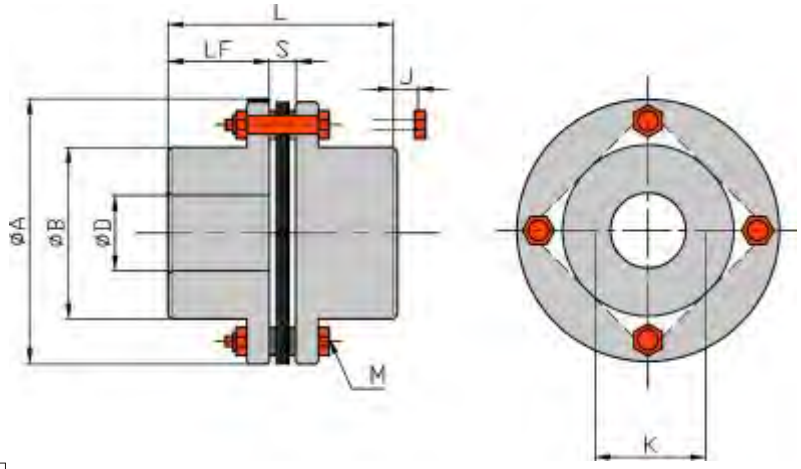

Dimension

/Unit:mm

Catalog Number 型號	A	B	D		L	LF	S	K	M	F
			Min	Max						
CP-68A	68	40	7	25	56	25	6	28	4-M6	13
CP-82A	82	54	12	35	56.2	25	6.2	34	4-M6	13
CP-94A	94	58	12	38	69.6	30	9.6	40	4-M8	23
CP-104A	104	68	20	42	76	33	10	42	4-M8	20
CP-126A	126	78	20	50	91	40	11	50	4-M10	25
CP-144A	144	88	20	60	102	45	12	57	4-M10	20
CP-168A	168	104	30	70	164	75	14	108	6-M10	
CP-180A	180	120	30	85	176	80	16	115	6-M10	
CP-215A	215	128	40	85	200	90	20	128	6-M16	

Specifications

Catalog Number 型號	Rated Torque 一般扭力 (N.m)	Max. Torque 最大扭力 (N.m)	Max Rotational Frequency 最高回轉數 (Rpm/min)	Moment* of Inertia 慣性 (Kg・m²)	Errors of Shaft End-Play 容許軸向位差 (mm)	Errors of Angularity 容許偏角 (°)
CP-68A	40	80	20000	3	±0.8	1
CP-82A	80	160	17000	8.7	±1.0	1
CP-94A	180	360	15000	16	±1.2	1
CP-104A	245	490	13000	26	±1.4	1
CP-126A	441	882	11000	65	±1.6	1
CP-144A	380	760	9000	99	±1.8	1
CP-168A	1170	2340	5100	238	±1.0	1
CP-180A	1960	3920	4800	365	±1.0	1
CP-215A	4903	9806	4300	830	±1.0	1

CP-C

ProductNO:

CP-82C - ⌀20x⌀20

/ Type / Inside dia

Material

S45C

Surface Treatment

Dye black

Features

- High torque、high rigid
- Low inertia、Zero backlash
- Suitable to middling large servomotor
- Buffer Material:SUS disk
- Fixed mode: Axial locking rings

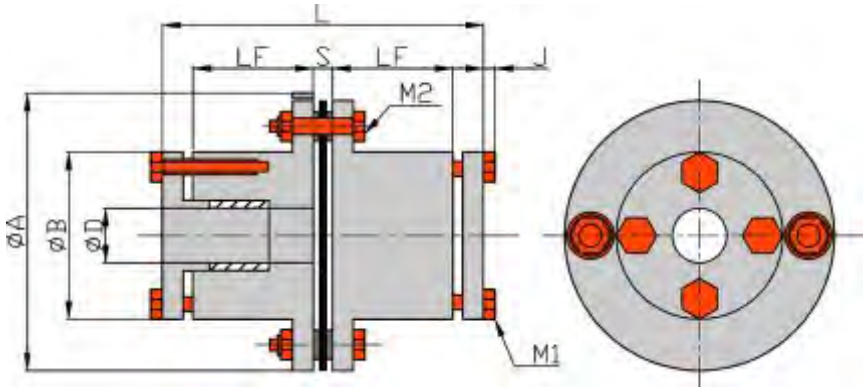

Dimension

/Unit:mm

Catalog Number 型號	A	B	D		L	LF	S	G	J	M1	M2
			Min	Max							
CP-68C	68	40	10	18	76	25	6	7	5	M6x4	M6
CP-82C	82	54	14	30	76.2	25	6.2	7	5	M6x4	M6
CP-94C	94	58	14	35	89.6	30	9.6	7	5	M6x4	M8
CP-104C	104	68	20	45	98	33	10	8	5	M6x6	M8
CP-126C	126	78	25	50	117	40	11	10	7	M8x4	M10
CP-144C	144	88	30	55	128	45	12	10	7	M8x4	M10
CP-168C	168	104	35	65	200	75	14	15	7	M8x6	M10
CP-180C	180	120	35	75	212	80	16	15	7	M8x6	M10
CP-215C	215	128	40	85	242	90	20	18	8	M10x6	M16

Specifications

Catalog Number 型號	Rated Torque 一般扭力 (N.m)	Max. Torque 最大扭力 (N.m)	Max Rotational Frequency 最高回轉數 (Rpm/min)	Moment* of Inertia 慣性 (Kg・m²)	Errors of Shaft End-Play 容許軸向位差 (mm)	Errors of Angularity 容許偏角 (°)
CP-68C	39	78	20000	3.0	±0.8	1
CP-82C	78	156	17000	8.7	±1.0	1
CP-94C	176	352	15000	16	±1.2	1
CP-104C	245	490	13000	26	±1.4	1
CP-126C	440	880	11000	65	±1.6	1
CP-144C	780	1560	9000	99	±1.8	1
CP-168C	1170	2340	5100	238	±1.0	1
CP-180C	1960	3920	4800	365	±1.0	1
CP-215C	4900	9800	4300	830	±1.0	1

Processing of standard diameter of keyway

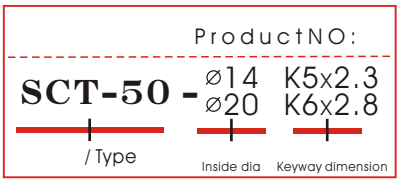

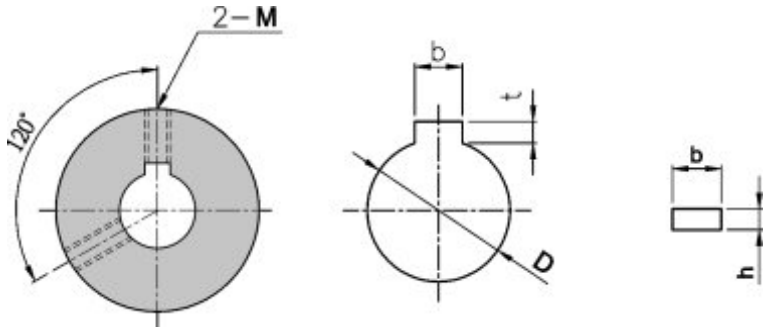

/Unit:mm

Stock Bores D	Keyways b		t		b x h
		(Js9)			
10	3	±0.015	1.5	+0.1 0	3 x 3
12	4	±0.015	1.8	+0.1 0	4 x 4
14~18	5	±0.015	2.3	+0.1 0	5 x 5
19~22	6	±0.015	2.8	+0.1 0	6 x 6
24~30	8	±0.030	3.3	+0.2 0	8 x 7
30~38	10	±0.030	3.3	+0.2 0	10 x 8
38~44	12	±0.030	3.3	+0.2 0	12 x 8
44~50	14	±0.043	3.8	+0.3 0	14 x 9
50~58	16	±0.043	4.3	+0.3 0	16 x10
58~65	18	±0.043	4.4	+0.3 0	18 x 11

尺寸範圍 (mm)	E			F			G		H						Js		J		K		M		N		P	R	尺寸範圍 (mm)
	E7	E8	E9	F6	F7	F8	G6	G7	H5	H6	H7	H8	H9	H10	Js6	Js7	J6	J7	K6	K7	M6	M7	N6	N7	P7	R7	
3 ~ 6	+32 +20	+38 +20	+50 +20	+18 +10	+22 +10	+28 +10	+12 +4	+16 +4	+5 0	+8 0	+12 0	+18 0	+30 0	+48 0	±4	±6	+5 −3	+6 −6	+2 −6	+3 −9	−1 −9	0 −12	−5 −13	−4 −16	−8 −20	−11 −23	3 ~ 6
6 ~ 10	+40 +25	+47 +25	+61 +25	+22 +13	+28 +13	+35 +13	+14 +5	+20 +5	+6 0	+9 0	+15 0	+22 0	+36 0	+58 0	±4.5	±7.5	+5 −4	+8 −7	+2 −7	+5 −10	−3 −12	0 −15	−7 −16	−4 −19	−9 −24	−13 −28	6 ~ 10
10 ~ 14 14 ~ 18	+50 +32	+59 +32	+75 +32	+27 +16	+34 +16	+43 +16	+17 +6	+24 +6	+8 0	+11 0	+18 0	+27 0	+43 0	+70 0	±5.5	±9	+6 −5	+10 −8	+2 −9	+5 −12	−4 −15	0 −18	−9 −20	−5 −23	−11 −29	−16 −34	10 ~ 14 14 ~ 18
18 ~ 24 24 ~ 30	+61 +40	+73 +40	+92 +40	+33 +20	+41 +20	+53 +20	+20 +7	+28 +7	+9 0	+13 0	+21 0	+33 0	+52 0	+84 0	±6.5	±10.5	+8 −5	+12 −9	+2 −11	+6 −15	−4 −17	0 −21	−11 −24	−7 −28	−14 −35	−20 −41	18 ~ 24 24 ~ 30
30 ~ 40 40 ~ 50	+75 +50	+89 +50	+112 +50	+41 +25	+50 +25	+64 +25	+25 +9	+34 +9	+11 0	+16 0	+25 0	+39 0	+62 0	+100 0	±8	±12.5	+10 −6	+14 −11	+3 −13	+7 −18	−4 −20	0 −25	−12 −28	−8 −33	−17 −42	−25 −50	30 ~ 40 40 ~ 50
50 ~ 65	+90 +60	+106 +60	+134 +60	+49 +30	+60 +30	+76 +30	+29 +10	+40 +10	+13 0	+19 0	+30 0	+46 0	+74 0	+120 0	±9.5	±15	+13 −6	+18 −12	+4 −15	+9 −21	−5 −24	0 −30	−14 −33	−9 −39	−21 −51	−30 −60	50 ~ 65
65 ~ 80																										−32 −62	65 ~ 80
80 ~ 100	+107 +72	+126 +72	+159 +72	+58 +36	+71 +36	+90 +36	+34 +12	+47 +12	+15 0	+22 0	+35 0	+54 0	+87 0	+140 0	±11	±17.5	+16 −6	+22 −13	+4 −18	+10 −25	−5 −28	0 −35	−16 −38	−10 −45	−24 −59	−38 −73	80 ~ 100
100 ~ 120																										−41 −76	100 ~ 120
120 ~ 140	+125 +85	+148 +85	+185 +85	+68 +43	+83 +43	+106 +43	+39 +14	+54 +14	+18 0	+25 0	+40 0	+63 0	+100 0	+160 0	±12.5	±20	+18 −7	+26 −14	+4 −21	+12 −28	−8 −33	0 −40	−20 −45	−12 −52	−28 −68	−48 −88	120 ~ 140
140 ~ 160																										−50 −90	140 ~ 160
160 ~ 180																										−53 −93	160 ~ 180
180 ~ 200	+146 +100	+172 +100	+125 +100	+79 +50	+96 +50	+122 +50	+44 +15	+61 +15	+20 0	+29 0	+46 0	+72 0	+115 0	+185 0	±14.5	±23	+22 −7	+30 −16	+5 −24	+13 −33	−8 −37	0 −46	−22 −51	−14 −60	−33 −79	−60 −106	180 ~ 200
200 ~ 225																										−63 −109	200 ~ 225
225 ~ 250																										−67 −113	225 ~ 250
250 ~ 280	+162 +110	+191 +110	+240 +110	+88 +56	+108 +56	+137 +56	+49 +17	+69 +17	+23 0	+32 0	+52 0	+81 0	+130 0	+210 0	±16	±26	+25 −7	+36 −16	+5 −27	+16 −36	−9 −41	0 −52	−25 −57	−14 −66	−33 −88	−74 −126	250 ~ 280
280 ~ 315																										−78 −130	280 ~ 315
315 ~ 355	+182 +125	+214 +125	+265 +125	+98 +62	+119 +62	+151 +62	+54 +18	+75 +18	+25 0	+36 0	+57 0	+89 0	+140 0	+230 0	±18	±28.5	+29 −7	+39 −18	+7 −29	+17 −40	−10 −46	0 −57	−26 −62	−16 −73	−41 −98	−87 −144	315 ~ 355
355 ~ 400																										−93 −150	355 ~ 400
400 ~ 450	+198 +135	+232 +135	+290 +135	+108 +68	+131 +68	+165 +68	+60 +20	+83 +20	+27 0	+40 0	+63 0	+97 0	+155 0	+250 0	±20	±31.5	+33 −7	+43 −20	+8 −32	+18 −45	−10 −50	0 −63	−27 −67	−17 −80	−45 −108	−103 −166	400 ~ 450
450 ~ 500																										−109 −172	450 ~ 500

Other Motion Tech Products

Zettlex

Precision in the Extreme

TRIO MOTION TECHNOLOGY

ROLLON

Kinavo

Servomech

NEW IDEAS IN LINEAR MOTION

Distributors for Australia & New Zealand

MOTION TECHNOLOGIES PTY LTD

24/22-30 Northumberland Road
Caringbah NSW 2229 Australia
Phone: (02) 9524 4782
Fax: (02) 9525 3878

sales@motiontech.com.au
www.motiontech.com.au

© 21/03/19