Panasonic
INDUSTRY

AC Servo Motor & Driver

MINAS A6 family
Battery-less absolute encoder motor

AC Servo Motor & Driver

MINAS A6 family

●This product is for industrial equipment. Don't use this product at general household.

2019.10 | industrial.panasonic.com/ac/e/

Build an absolute system with no battery!

Reduced the battery for the absolute encoder by installing the power generating element in the motor.
In addition to improving maintainability, we support the construction of ecological and economical industrial machines and systems.

Maintenance-free - there is no need to perform battery replacement.

The battery-less absolute encoder is an innovative encoder requiring no hassle inventory management or cost of battery replacement. It contributes to the construction of ecological and economical industrial machines and systems.

Battery-less absolute encoder motor lineup

	80 mm sq. or less Leadwire type						100 mm sq. or more Encoder connector (Small size JN2) type					
	50 W	100 W	200 W	400 W	750 W	1000 W	1.0 kW	1.5 kW	2.0 kW	3.0 kW	4.0 kW	5.0 kW
Low inertia **MSMF**	100 V 200 V	100 V 200 V	100 V 200 V	100 V 200 V	200 V	200 V	200 V	200 V	200 V	200 V	200 V	200 V
Middle inertia **MQMF**		100 V 200 V	100 V 200 V	100 V 200 V								
Middle inertia **MDMF**							200 V	200 V	200 V	200 V	200 V	200 V
Middle inertia **MGMF**							850 W 200 V	1.3 kW 200 V	1.8 kW 200 V	2.4 kW 200 V	2.9 kW 200 V	4.4 kW 200 V
High inertia **MHMF**	100 V 200 V	100 V 200 V	100 V 200 V	100 V 200 V	200 V	200 V	200 V	200 V	200 V	200 V	200 V	200 V

〈Table description〉 〈On sale〉 Voltage specifications 100 V 200 V
〈Coming soon〉 Voltage specifications 100 V 200 V

[Motor] Model Designation

M S M F 5 A Z A 1 A 2 *

① ② ③ ④ ⑤ ⑥ ⑦

Special specifications
M: Special order product

① Type

Symbol	Type
MSM	Low inertia (50 W to 1000 W)
MQM	Middle inertia Flat type (100 W to 400 W)
MHM	High inertia (50 W to 1000 W)

② Series

Symbol	Series name
F	A6 family

③ Motor rated output

Symbol	Rated output	Symbol	Rated output
5A	50 W	04	400 W
01	100 W	08	750 W
02	200 W	09	1000 W

④ Voltage specifications

Symbol	Specifications
1	100 V
2	200 V
Z	100 V/ 200 V common (50 W only)

⑤ Rotary encoder specifications

Symbol	Format	Pulse counts	Resolution	Wires
A	Absolute	23-bit	8388608	7

⑥ Design order

Symbol	Specifications
1	Standard

⑦ Motor specifications: 80 mm sq. or less MSMF 50 W to 1000 W

Symbol		Shaft		Holding brake		Oil seal		Motor encoder terminal
		Round	Key-way, center tap	without	with	without	with	Lead wire
A	2	●		●		●		●
B	2	●			●	●		●
C	2	●		●			●	●
D	2	●			●		●	●
S	2		●	●		●		●
T	2		●		●	●		●
U	2		●	●			●	●
V	2		●		●		●	●

⑦ Motor specifications: 80 mm sq. or less MQMF 100 W to 400 W MHMF 50 W to 1000 W

Symbol		Shaft		Holding brake		Oil seal			Motor encoder terminal
		Round	Key-way, center tap	without	with	without	with	With protective lip	Lead wire
A	2	●		●		●			●
B	2	●			●	●			●
C	2	●		●			●		●
C	4	●		●				●	●
D	2	●			●		●		●
D	4	●			●			●	●
S	2		●	●		●			●
T	2		●		●	●			●
U	2		●	●			●		●
U	4		●	●				●	●
V	2		●		●		●		●
V	4		●		●			●	●

AQCTB0104E 201910

Table of Model Numbers ●Please refer to the end of this catalog for the software version of the applicable amplifier.

● 80 mm sq. or less 50 W to 1000 W MSMF, MQMF, MHMF Leadwire type IP65

Motor				Driver		Power capacity (at rated load)
Motor series	Power supply	Output (W)	Model No.	A6 series Model No.	Dimension Frame	
MSMF (Leadwire type) 3000 r/min Low inertia	Single phase 100 V	50	MSMF5AZA1□2	MADL☆01○★	A-frame	Approx. 0.4 kVA
		100	MSMF011A1□2	MADL☆11○★		
		200	MSMF021A1□2	MBDL☆21○★	B-frame	Approx. 0.5 kVA
		400	MSMF041A1□2	MCDL☆31○★	C-frame	Approx. 0.9 kVA
	Single phase/ 3-phase 200 V	50	MSMF5AZA1□2	MADL☆05○★	A-frame	Approx. 0.5 kVA
		100	MSMF012A1□2			
		200	MSMF022A1□2	MADL☆15○★		
		400	MSMF042A1□2	MBDL☆25○★	B-frame	Approx. 0.9 kVA
		750	MSMF082A1□2	MCDL☆35○★	C-frame	Approx. 1.8 kVA
		1000	MSMF092A1□2	MDDL☆45○★	D-frame	Approx. 2.4 kVA
MQMF (Leadwire type) 3000 r/min Middle inertia Flat type	Single phase 100 V	100	MQMF011A1□□	MADL☆11○★	A-frame	Approx. 0.4 kVA
		200	MQMF021A1□□	MBDL☆21○★	B-frame	Approx. 0.5 kVA
		400	MQMF041A1□□	MCDL☆31○★	C-frame	Approx. 0.9 kVA
	Single phase/ 3-phase 200 V	100	MQMF012A1□□	MADL☆05○★	A-frame	Approx. 0.5 kVA
		200	MQMF022A1□□	MADL☆15○★		
		400	MQMF042A1□□	MBDL☆25○★	B-frame	Approx. 0.9 kVA
MHMF (Leadwire type) 3000 r/min High inertia	Single phase 100 V	50	MHMF5AZA1□□	MADL☆01○★	A-frame	Approx. 0.4 kVA
		100	MHMF011A1□□	MADL☆11○★		
		200	MHMF021A1□□	MBDL☆21○★	B-frame	Approx. 0.5 kVA
		400	MHMF041A1□□	MCDL☆31○★	C-frame	Approx. 0.9 kVA
	Single phase/ 3-phase 200 V	50	MHMF5AZA1□□	MADL☆05○★	A-frame	Approx. 0.5 kVA
		100	MHMF012A1□□			
		200	MHMF022A1□□	MADL☆15○★		
		400	MHMF042A1□□	MBDL☆25○★	B-frame	Approx. 0.9 kVA
		750	MHMF082A1□□	MCDL☆35○★	C-frame	Approx. 1.8 kVA
		1000	MHMF092A1□□	MDDL☆55○★	D-frame	Approx. 2.4 kVA

[Motor] □ : For more information, Please refer to "[Motor] Model Designation" in P.1.
[Driver] ☆ ○ ★ : For more information, Please refer to "[Driver] Model Designation" below.

[Driver] Model Designation ●About "☆" "○" "★" in the above table

(☆) Safety Function		(○) I/f specifications	(★) Classification of type	
Symbol	Specifications	Symbol (specification)	Symbol	Specifications
N	without the safety function	S (Analog/Pulse)	E	Basic type (Pulse train only)*1
T	with the safety function		F	Multi fanction type (Pulse, analog, full-closed)
N	without the safety function		G	RS485 communication type (Pulse train only)
N	without the safety function	N (RTEX)	E	Standard for rotary motor
T	with the safety function		F	Multifunction for rotary motor
N	without the safety function	B (EtherCAT)	E	Standard for rotary motor
T	with the safety function		F	Multifunction for rotary motor

*1 Because A6SE series driver (dedicated for position control) does not support the absolute system specification, only incremental system can be used in combination.

[Driver] Dimensions

■ A-frame, B-frame

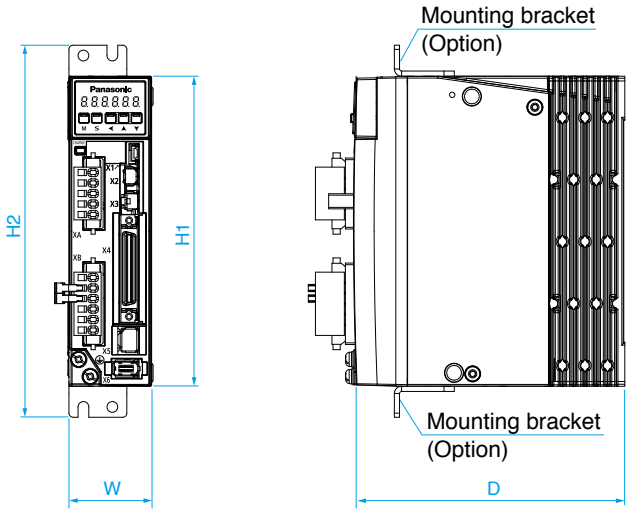

Rack mount type
(Base mount type [Back-end mounting] is also available.)

Frame symbol	W (mm)	H1 (mm)	H2 (mm)	D (mm)	Mass (kg)
A-frame	40	150	180	130	0.8
B-frame	55	150	180	130	1.0

● Please refer to A6 family catalog for details.

■ C-frame, D-frame

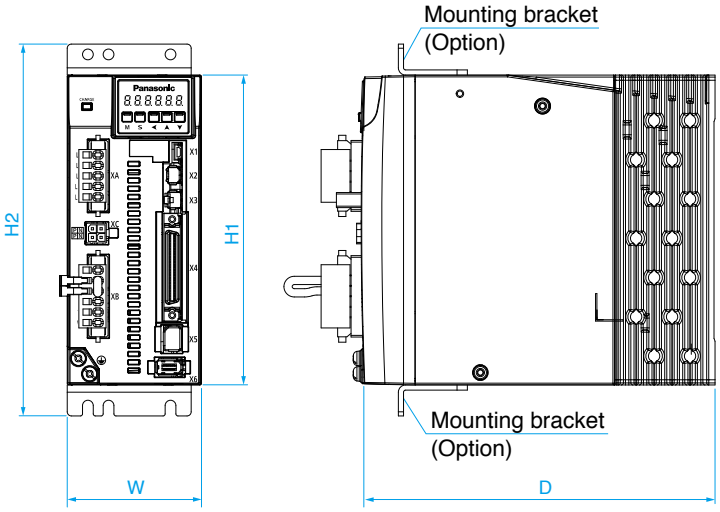

Rack mount type
(Base mount type [Back-end mounting] is also available.)

Frame symbol	W (mm)	H1 (mm)	H2 (mm)	D (mm)	Mass (kg)
C-frame	65	150	180	170	1.6
D-frame	85	150	180	170	2.1

● Please refer to A6 family catalog for details.

Encoder Cable (Option)

Length (m)	Part No.(ex.)
3	MFECA0030EAD
5	MFECA0050EAD
10	MFECA0100EAD

● Please contact us for 10 m to 20 m.

Motor Specifications MSMF type [Low inertia]

			50 W		100 W	
			AC100 V	AC200 V	AC100 V	AC200 V
Motor model *1		IP65	MSMF5AZA1□2	MSMF5AZA1□2	MSMF011A1□2	MSMF012A1□2
Applicable driver	Model No.	Multifunction type	MADLT01SF	MADLT05SF	MADLT11SF	MADLT05SF
		RS485 communication type *2	MADLN01SG	MADLN05SG	MADLN11SG	MADLN05SG
		Basic type *2	MADLN01SE	MADLN05SE	MADLN11SE	MADLN05SE
	Frame symbol		A-frame		A-frame	
Power supply capacity		(kVA)	0.4	0.5	0.4	0.5
Rated output		(W)	50		100	
Rated torque		(N·m)	0.16		0.32	
Continuous stall torque		(N·m)	0.16		0.32	
Momentary Max. peak torque		(N·m)	0.48		0.95	
Rated current		(A(rms))	1.1		1.6	1.1
Max. current		(A(o-p))	4.7		6.9	4.7
Regenerative brake frequency (times/min) Note)1		Without option	No limit Note)2		No limit Note)2	
		With option	DV0P4280/No limit Note)2	DV0P4281/No limit Note)2	DV0P4280/No limit Note)2	DV0P4281/No limit Note)2
Rated rotational speed		(r/min)	3000		3000	
Max. rotational speed		(r/min)	6000		6000	
Moment of inertia of rotor ($\times 10^{-4}$ kg·m^2)		Without brake	0.026		0.048	
		With brake	0.029		0.051	
Recommended moment of inertia ratio of the load and the rotor Note)3			30 times or less		30 times or less	
Rotary encoder specifications			23-bit Absolute		23-bit Absolute	
	Resolution per single turn		8388608		8388608	

			200 W		400 W	
			AC100 V	AC200 V	AC100 V	AC200 V
Motor model *1		IP65	MSMF021A1□2	MSMF022A1□2	MSMF041A1□2	MSMF042A1□2
Applicable driver	Model No.	Multifunction type	MBDLT21SF	MADLT15SF	MCDLT31SF	MBDLT25SF
		RS485 communication type *2	MBDLN21SG	MADLN15SG	MCDLN31SG	MBDLN25SG
		Basic type *2	MBDLN21SE	MADLN15SE	MCDLN31SE	MBDLN25SE
	Frame symbol		B-frame	A-frame	C-frame	B-frame
Power supply capacity		(kVA)	0.5		0.9	
Rated output		(W)	200		400	
Rated torque		(N·m)	0.64		1.27	
Continuous stall torque		(N·m)	0.64		1.27	
Momentary Max. peak torque		(N·m)	1.91		3.82	
Rated current		(A(rms))	2.5	1.5	4.6	2.4
Max. current		(A(o-p))	10.6	6.5	19.5	10.2
Regenerative brake frequency (times/min) Note)1		Without option	No limit Note)2		No limit Note)2	
		With option	DV0P4283 / No limit Note)2		DV0P4282/No limit Note)2	DV0P4283/No limit Note)2
Rated rotational speed		(r/min)	3000		3000	
Max. rotational speed		(r/min)	6000		6000	
Moment of inertia of rotor ($\times 10^{-4}$ kg·m^2)		Without brake	0.14		0.27	
		With brake	0.17		0.30	
Recommended moment of inertia ratio of the load and the rotor Note)3			30 times or less		30 times or less	
Rotary encoder specifications			23-bit Absolute		23-bit Absolute	
	Resolution per single turn		8388608		8388608	

- For details of Note)1 to Note)3, refer to the back cover.

*1 □2 in the motor model number represents the motor specifications. Detail of model designation, refer to "[Motor] Model Designation" in P.1.

*2 Basic type and RS485 communication type are "Position control type". Detail of model designation, refer to "[Driver] Model Designation" in P.2.

Motor Specifications MSMF type [Low inertia]

			750 W
			AC200 V
Motor model *1		IP65	MSMF082A1□2
Applicable driver	Model No.	Multifunction type	MCDLT35SF
		RS485 communication type *2	MCDLN35SG
		Basic type *2	MCDLN35SE
	Frame symbol		C-frame
Power supply capacity		(kVA)	1.8
Rated output		(W)	750
Rated torque		(N·m)	2.39
Continuous stall torque		(N·m)	2.39
Momentary Max. peak torque		(N·m)	7.16
Rated current		(A(rms))	4.1
Max. current		(A(o-p))	17.4
Regenerative brake frequency (times/min) Note)1		Without option	No limit Note)2
		With option	DV0P4283 / No limit Note)2
Rated rotational speed		(r/min)	3000
Max. rotational speed		(r/min)	6000
Moment of inertia of rotor ($\times 10^{-4}$ kg·m^2)		Without brake	0.96
		With brake	1.06
Recommended moment of inertia ratio of the load and the rotor Note)3			20 times or less
Rotary encoder specifications			23-bit Absolute
	Resolution per single turn		8388608

			1000 W
			AC200 V
Motor model *1		IP65	MSMF092A1□2
Applicable driver	Model No.	Multifunction type	MDDLT45SF
		RS485 communication type *2	MDDLN45SG
		Basic type *2	MDDLN45SE
	Frame symbol		D-frame
Power supply capacity		(kVA)	2.4
Rated output		(W)	1000
Rated torque		(N·m)	3.18
Continuous stall torque		(N·m)	3.18
Momentary Max. peak torque		(N·m)	9.55
Rated current		(A(rms))	5.7
Max. current		(A(o-p))	24.2
Regenerative brake frequency (times/min) Note)1		Without option	No limit Note)2
		With option	DV0P4284 / No limit Note)2
Rated rotational speed		(r/min)	3000
Max. rotational speed		(r/min)	6000
Moment of inertia of rotor ($\times 10^{-4}$ kg·m^2)		Without brake	1.26
		With brake	1.36
Recommended moment of inertia ratio of the load and the rotor Note)3			15 times or less
Rotary encoder specifications			23-bit Absolute
	Resolution per single turn		8388608

- For details of Note)1 to Note)3, refer to the back cover.

*1 □2 in the motor model number represents the motor specifications. Detail of model designation, refer to "[Motor] Model Designation" in P.1.

*2 Basic type and RS485 communication type are "Position control type". Detail of model designation, refer to "[Driver] Model Designation" in P.2.

Motor Specifications MQMF type [Middle inertia Flat type]

			100 W		200 W	
			AC100 V	AC200 V	AC100 V	AC200 V
Motor model *1		IP65	MQMF011A1□□	MQMF012A1□□	MQMF021A1□□	MQMF022A1□□
Applicable driver	Model No.	Multifunction type	MADLT11SF	MADLT05SF	MBDLT21SF	MADLT15SF
		RS485 communication type *2	MADLN11SG	MADLN05SG	MBDLN21SG	MADLN15SG
		Basic type *2	MADLN11SE	MADLN05SE	MBDLN21SE	MADLN15SE
	Frame symbol		A-frame		B-frame	A-frame
Power supply capacity		(kVA)	0.4	0.5	0.5	
Rated output		(W)	100		200	
Rated torque		(N·m)	0.32		0.64	
Continuous stall torque		(N·m)	0.33		0.76	
Momentary Max. peak torque		(N·m)	1.11		2.23	
Rated current		(A(rms))	1.6	1.1	2.1	1.4
Max. current		(A(o-p))	7.9	5.5	10.4	6.9
Regenerative brake frequency (times/min) Note)1		Without option	No limit Note)2		No limit Note)2	
		With option	DV0P4280/No limit Note)2	DV0P4281/No limit Note)2	DV0P4283 / No limit Note)2	
Rated rotational speed		(r/min)	3000		3000	
Max. rotational speed		(r/min)	6500		6500	
Moment of inertia of rotor ($\times 10^{-4}$ kg·m^2)		Without brake	0.15		0.50	
		With brake	0.18		0.59	
Recommended moment of inertia ratio of the load and the rotor Note)3			20 times or less		20 times or less	
Rotary encoder specifications			23-bit Absolute		23-bit Absolute	
	Resolution per single turn		8388608		8388608	

			400 W	
			AC100 V	AC200 V
Motor model *1		IP65	MQMF041A1□□	MQMF042A1□□
Applicable driver	Model No.	Multifunction type	MCDLT31SF	MBDLT25SF
		RS485 communication type *2	MCDLN31SG	MBDLN25SG
		Basic type *2	MCDLN31SE	MBDLN25SE
	Frame symbol		C-frame	B-frame
Power supply capacity		(kVA)	0.9	
Rated output		(W)	400	
Rated torque		(N·m)	1.27	
Continuous stall torque		(N·m)	1.40	
Momentary Max. peak torque		(N·m)	4.46	
Rated current		(A(rms))	4.1	2.1
Max. current		(A(o-p))	20.3	10.4
Regenerative brake frequency (times/min) Note)1		Without option	No limit Note)2	
		With option	DV0P4282/No limit Note)2	DV0P4283/No limit Note)2
Rated rotational speed		(r/min)	3000	
Max. rotational speed		(r/min)	6500	
Moment of inertia of rotor ($\times 10^{-4}$ kg·m^2)		Without brake	0.98	
		With brake	1.06	
Recommended moment of inertia ratio of the load and the rotor Note)3			20 times or less	
Rotary encoder specifications			23-bit Absolute	
	Resolution per single turn		8388608	

- For details of Note)1 to Note)3, refer to the back cover.

*1 □□ in the motor model number represents the motor specifications. Detail of model designation, refer to "[Motor] Model Designation" in P.1.

*2 Basic type and RS485 communication type are "Position control type". Detail of model designation, refer to "[Driver] Model Designation" in P.2.

Motor Specifications MHMF type [High inertia]

			50 W		100 W	
			AC100 V	AC200 V	AC100 V	AC200 V
Motor model *1		IP65	MHMF5AZA1□□	MHMF5AZA1□□	MHMF011A1□□	MHMF012A1□□
Applicable driver	Model No.	Multifunction type	MADLT01SF	MADLT05SF	MADLT11SF	MADLT05SF
		RS485 communication type *2	MADLN01SG	MADLN05SG	MADLN11SG	MADLN05SG
		Basic type *2	MADLN01SE	MADLN05SE	MADLN11SE	MADLN05SE
	Frame symbol		A-frame		A-frame	
Power supply capacity		(kVA)	0.4	0.5	0.4	0.5
Rated output		(W)	50		100	
Rated torque		(N·m)	0.16		0.32	
Continuous stall torque		(N·m)	0.18		0.33	
Momentary Max. peak torque		(N·m)	0.56		1.11	
Rated current		(A(rms))	1.1		1.6	1.1
Max. current		(A(o-p))	5.5		7.9	5.5
Regenerative brake frequency (times/min) Note)1		Without option	No limit Note)2		No limit Note)2	
		With option	DV0P4280/No limit Note)2	DV0P4281/No limit Note)2	DV0P4280/No limit Note)2	DV0P4281/No limit Note)2
Rated rotational speed		(r/min)	3000		3000	
Max. rotational speed		(r/min)	6500		6500	
Moment of inertia of rotor ($\times 10^{-4}$ kg·m^2)		Without brake	0.038		0.071	
		With brake	0.042		0.074	
Recommended moment of inertia ratio of the load and the rotor Note)3			30 times or less		30 times or less	
Rotary encoder specifications			23-bit Absolute		23-bit Absolute	
	Resolution per single turn		8388608		8388608	

			200 W		400 W	
			AC100 V	AC200 V	AC100 V	AC200 V
Motor model *1		IP65	MHMF021A1□□	MHMF022A1□□	MHMF041A1□□	MHMF042A1□□
Applicable driver	Model No.	Multifunction type	MBDLT21SF	MADLT15SF	MCDLT31SF	MBDLT25SF
		RS485 communication type *2	MBDLN21SG	MADLN15SG	MCDLN31SG	MBDLN25SG
		Basic type *2	MBDLN21SE	MADLN15SE	MCDLN31SE	MBDLN25SE
	Frame symbol		B-frame	A-frame	C-frame	B-frame
Power supply capacity		(kVA)	0.5		0.9	
Rated output		(W)	200		400	
Rated torque		(N·m)	0.64		1.27	
Continuous stall torque		(N·m)	0.76		1.40	
Momentary Max. peak torque		(N·m)	2.23		4.46	
Rated current		(A(rms))	2.1	1.4	4.1	2.1
Max. current		(A(o-p))	10.4	6.9	20.3	10.4
Regenerative brake frequency (times/min) Note)1		Without option	No limit Note)2		No limit Note)2	
		With option	DV0P4283 / No limit Note)2		DV0P4282/No limit Note)2	DV0P4283/No limit Note)2
Rated rotational speed		(r/min)	3000		3000	
Max. rotational speed		(r/min)	6500		6500	
Moment of inertia of rotor ($\times 10^{-4}$ kg·m^2)		Without brake	0.29		0.56	
		With brake	0.31		0.58	
Recommended moment of inertia ratio of the load and the rotor Note)3			30 times or less		30 times or less	
Rotary encoder specifications			23-bit Absolute		23-bit Absolute	
	Resolution per single turn		8388608		8388608	

- For details of Note)1 to Note)3, refer to the back cover.

*1 □□ in the motor model number represents the motor specifications. Detail of model designation, refer to "[Motor] Model Designation" in P.1.

*2 Basic type and RS485 communication type are "Position control type". Detail of model designation, refer to "[Driver] Model Designation" in P.2.

			750 W
			AC200 V
Motor model *1		IP65	MHMF082A1□□
Applicable driver	Model No.	Multifunction type	MCDLT35SF
		RS485 communication type *2	MCDLN35SG
		Basic type *2	MCDLN35SE
	Frame symbol		C-frame
Power supply capacity		(kVA)	1.8
Rated output		(W)	750
Rated torque		(N·m)	2.39
Continuous stall torque		(N·m)	2.86
Momentary Max. peak torque		(N·m)	8.36
Rated current		(A(rms))	3.8
Max. current		(A(o-p))	18.8
Regenerative brake frequency (times/min) Note)1		Without option	No limit Note)2
		With option	DV0P4283 / No limit Note)2
Rated rotational speed		(r/min)	3000
Max. rotational speed		(r/min)	6000
Moment of inertia of rotor ($\times 10^{-4}$ kg·m^2)		Without brake	1.56
		With brake	1.66
Recommended moment of inertia ratio of the load and the rotor Note)3			20 times or less
Rotary encoder specifications			23-bit Absolute
	Resolution per single turn		8388608

			1000 W
			AC200 V
Motor model *1		IP65	MHMF092A1□□
Applicable driver	Model No.	Multifunction type	MDDLT55SF
		RS485 communication type *2	MDDLN55SG
		Basic type *2	MDDLN55SE
	Frame symbol		D-frame
Power supply capacity		(kVA)	2.4
Rated output		(W)	1000
Rated torque		(N·m)	3.18
Continuous stall torque		(N·m)	3.34
Momentary Max. peak torque		(N·m)	11.1
Rated current		(A(rms))	5.7
Max. current		(A(o-p))	28.2
Regenerative brake frequency (times/min) Note)1		Without option	No limit Note)2
		With option	DV0P4284 / No limit Note)2
Rated rotational speed		(r/min)	3000
Max. rotational speed		(r/min)	6000
Moment of inertia of rotor ($\times 10^{-4}$ kg·m^2)		Without brake	2.03
		With brake	2.13
Recommended moment of inertia ratio of the load and the rotor Note)3			15 times or less
Rotary encoder specifications			23-bit Absolute
	Resolution per single turn		8388608

- For details of Note)1 to Note)3, refer to the back cover.

*1 □□ in the motor model number represents the motor specifications. Detail of model designation, refer to "[Motor] Model Designation" in P.1.

*2 Basic type and RS485 communication type are "Position control type". Detail of model designation, refer to "[Driver] Model Designation" in P.2.

■ without Brake

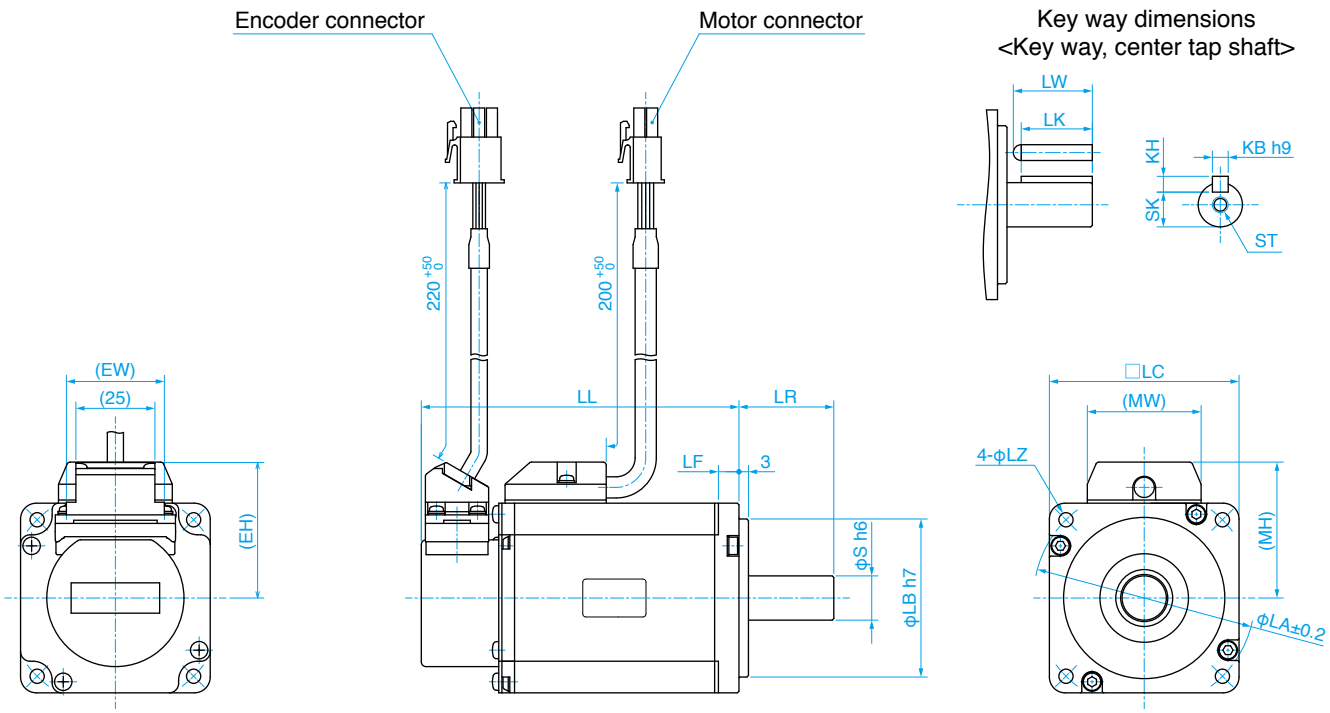

• MSMF dimension table

MSMF type [Low inertia]	Motor model	Output (W)	LC	LL						
				without Brake			with Brake			
				without oil seal	with oil seal	with protective lip/ with oil seal	without oil seal	with oil seal	with protective lip / with oil seal	
	MSMF5AZA1□2	50	38	76.6	76.6	—	106.6	106.6	—	
	MSMF01△A1□2	100	38	96.6	96.6	—	126.6	126.6	—	
	MSMF02△A1□2	200	60	81	81	—	117.5	117.5	—	
	MSMF04△A1□2	400	60	100.5	100.5	—	137	137	—	
	MSMF082A1□2	750	80	112.6	112.6	—	149.2	149.2	—	
	MSMF092A1□2	1000	80	127.6	127.6	—	164.2	164.2	—	

△ in the motor model number represents the motor voltage specification, and □2 represent the motor specifications.
Please refer to “[Motor] Model Designation” in P.1.

■ with Brake

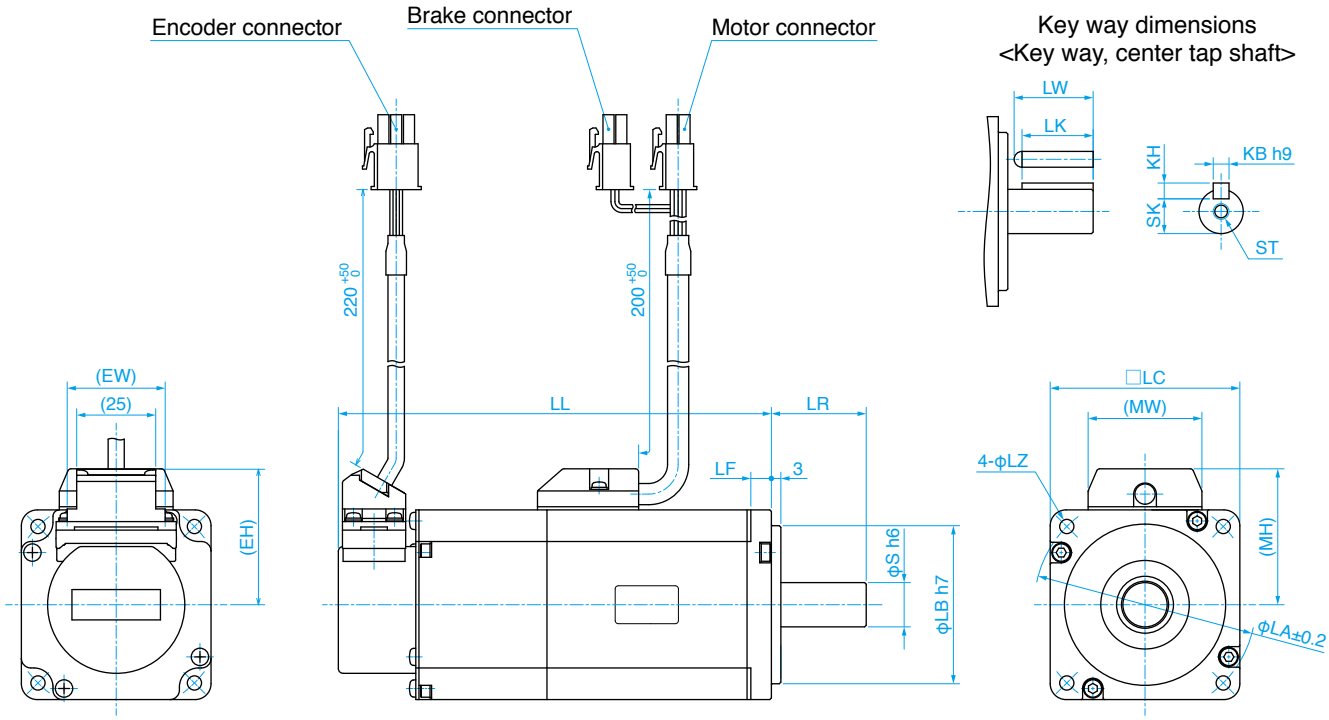

[Unit: mm]

LR		S	LA	LZ	LB	LF	SK	KH	KB	LW	LK	ST	MW	MH	EW	EH
with / without Brake																
with / without oil seal	with protective lip / with oil seal															
25	—	8	45	3.4	30	6	6.2	3	3	14	12.5	M3 depth 6	27	32	30	36.3
25	—	8	45	3.4	30	6	6.2	3	3	14	12.5	M3 depth 6	27	32	30	36.3
30	—	11	70	4.5	50	6.5	8.5	4	4	20	18	M4 depth 8	36	43	31	42.9
30	—	14	70	4.5	50	6.5	11	5	5	25	22.5	M5 depth 10	36	43	31	42.9
35	—	19	90	6	70	8	15.5	6	6	25	22	M5 depth 10	36	53	31	52.7
35	—	19	90	6	70	8	15.5	6	6	25	22	M5 depth 10	36	53	31	52.7

■ with Brake / without protective lip

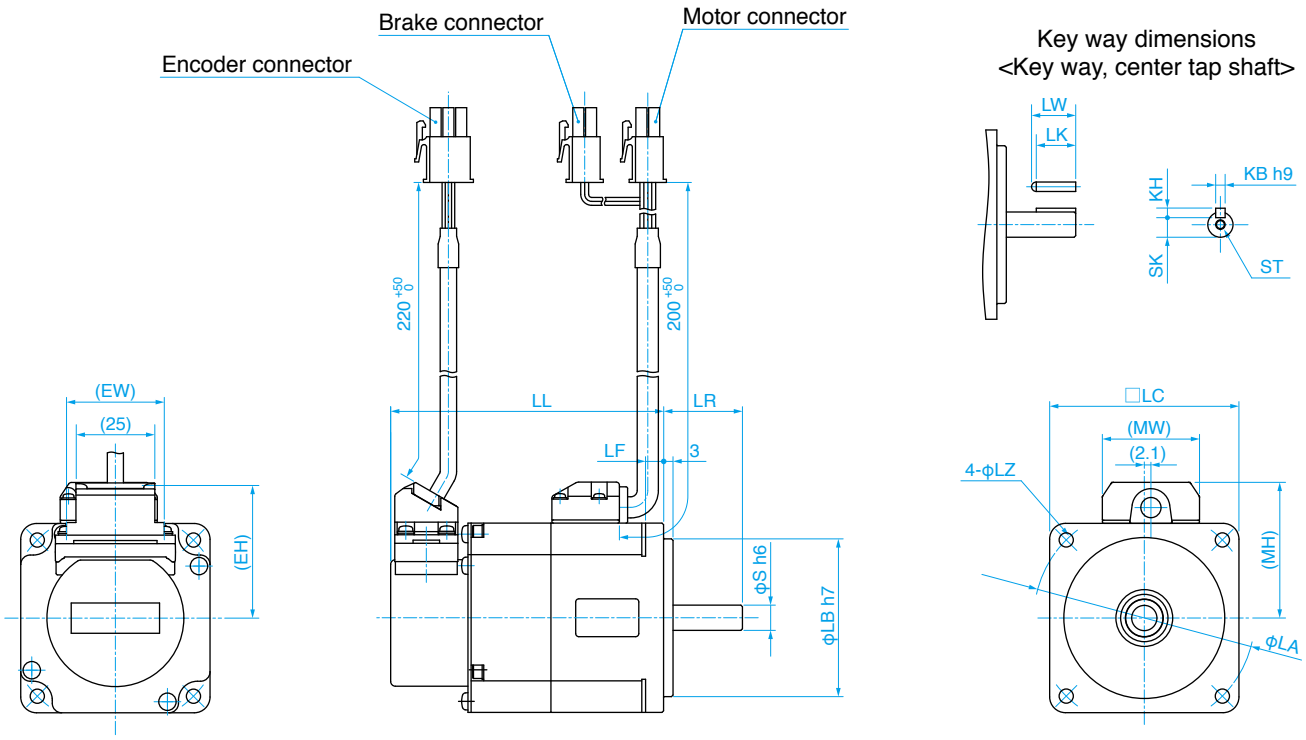

• MQMF dimension table

MQMF type [Middle inertia Flat typ]	Motor model	Output (W)	LC	LL						
				without Brake			with Brake			
				without oil seal	with oil seal	with protective lip/ with oil seal	without oil seal	with oil seal	with protective lip / with oil seal	
	MQMF01△A1□□	100	60	65.2	68.7	65.2	86.5	90	86.5	
	MQMF02△A1□□	200	80	71.1	74.6	71.1	94.9	98.4	94.9	
	MQMF04△A1□□	400	80	83.6	87.1	83.6	107.9	110.9	107.4	

△ in the motor model number represents the motor voltage specification, and □□ represent the motor specifications.
Please refer to “[Motor] Model Designation” in P.1.

■ with Brake / with protective lip

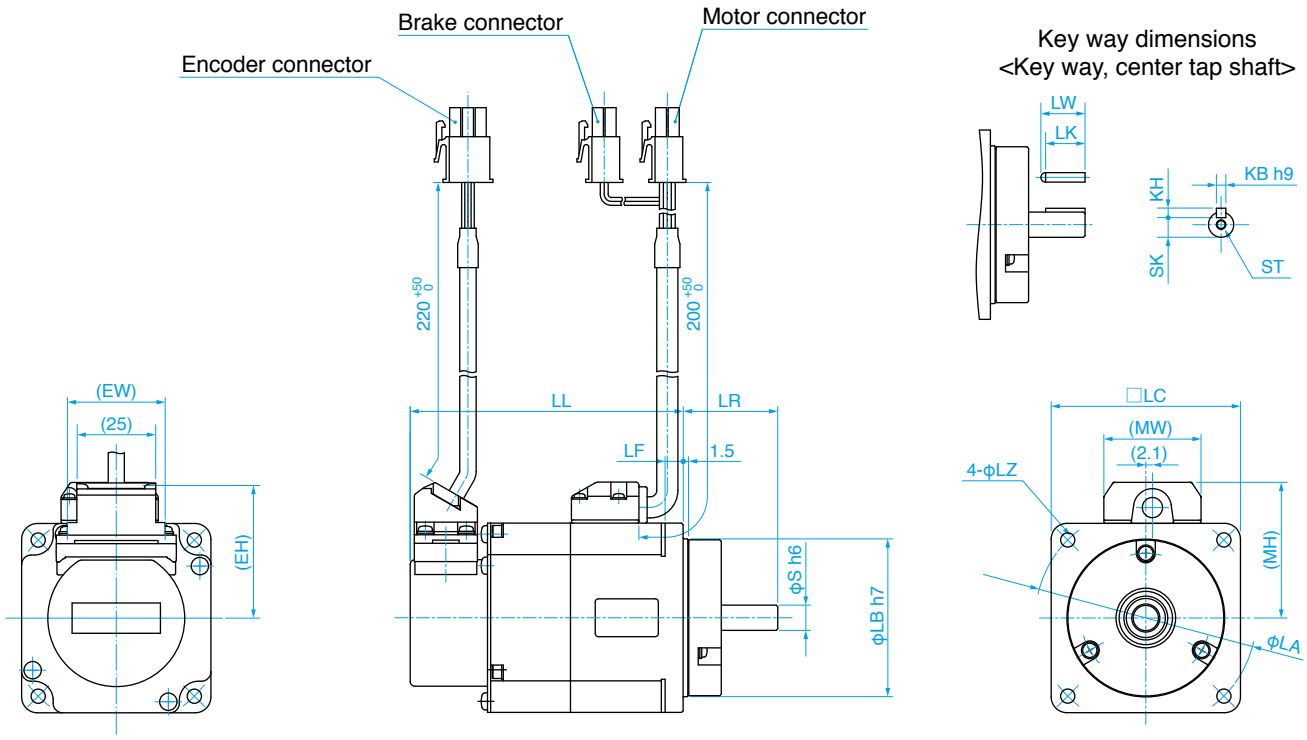

[Unit: mm]

	LR		S	LA	LZ	LB	LF	SK	KH	KB	LW	LK	ST	MW	MH	EW	EH
	with / without Brake																
	with / without oil seal	with protective lip / with oil seal															
	25	30	8	70	4.5	50	5.7	6.2	3	3	14	12.5	M3 depth 6	30.8	43	31	42.9
	30	35	11	90	6	70	8	8.5	4	4	20	18	M4 depth 8	30.8	53	31	52.7
	30	35	14	90	6	70	8	11	5	5	25	22.5	M5 depth 10	30.8	53	31	52.7

■ with Brake / without protective lip

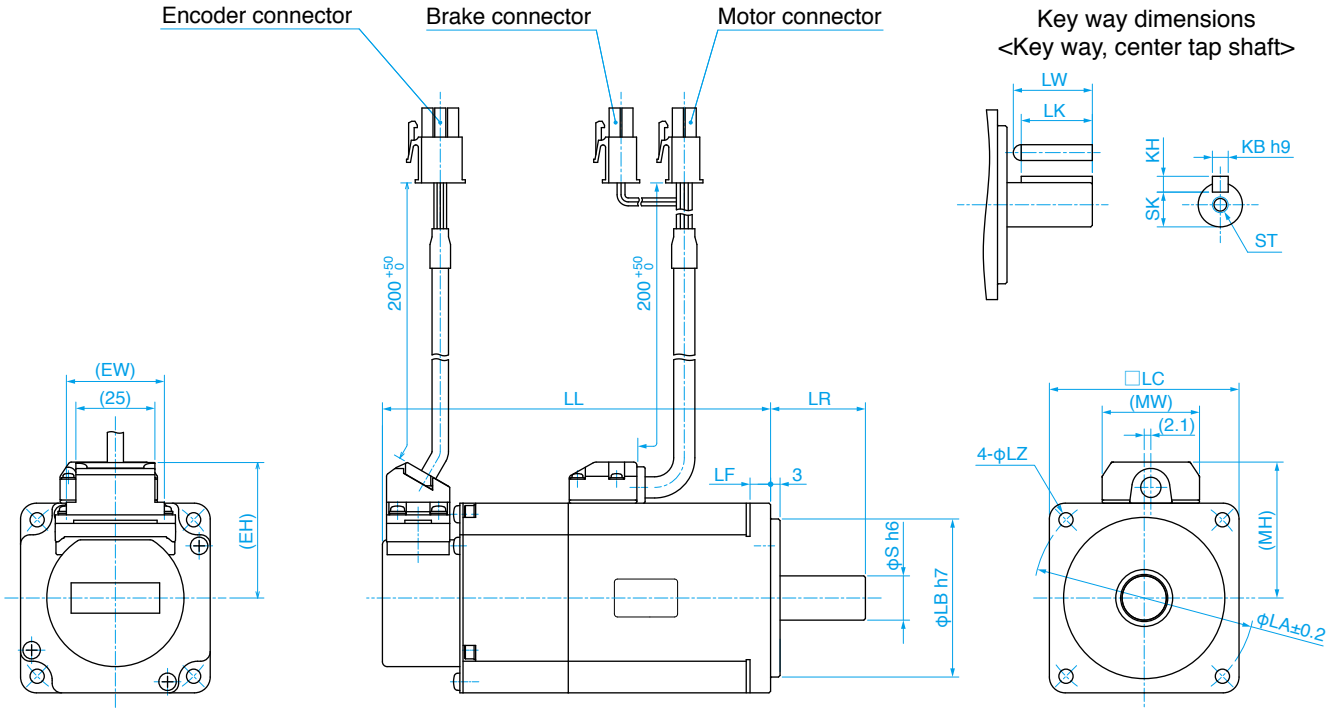

• MHMF dimension table

Motor model	Output (W)	LC	LL						
			without Brake			with Brake			
			without oil seal	with oil seal	with protective lip/ with oil seal	without oil seal	with oil seal	with protective lip / with oil seal	
MHMF5AZA1□□	50	40	62.5	66.5	62.5	96.4	100.4	96.4	
MHMF01△A1□□	100	40	76.5	80.5	76.5	110.4	114.4	110.4	
MHMF02△A1□□	200	60	76.5	80	76.5	105.8	109.3	105.8	
MHMF04△A1□□	400	60	93.5	97	93.5	122.8	126.3	122.8	
MHMF082A1□□	750	80	100.7	104.2	100.7	134.5	138	134.5	
MHMF092A1□□	1000	80	113.5	117	113.5	147.3	150.8	147.3	

△ in the motor model number represents the motor voltage specification, and □□ represent the motor specifications.
Please refer to “[Motor] Model Designation” in P.1.

■ with Brake / with protective lip

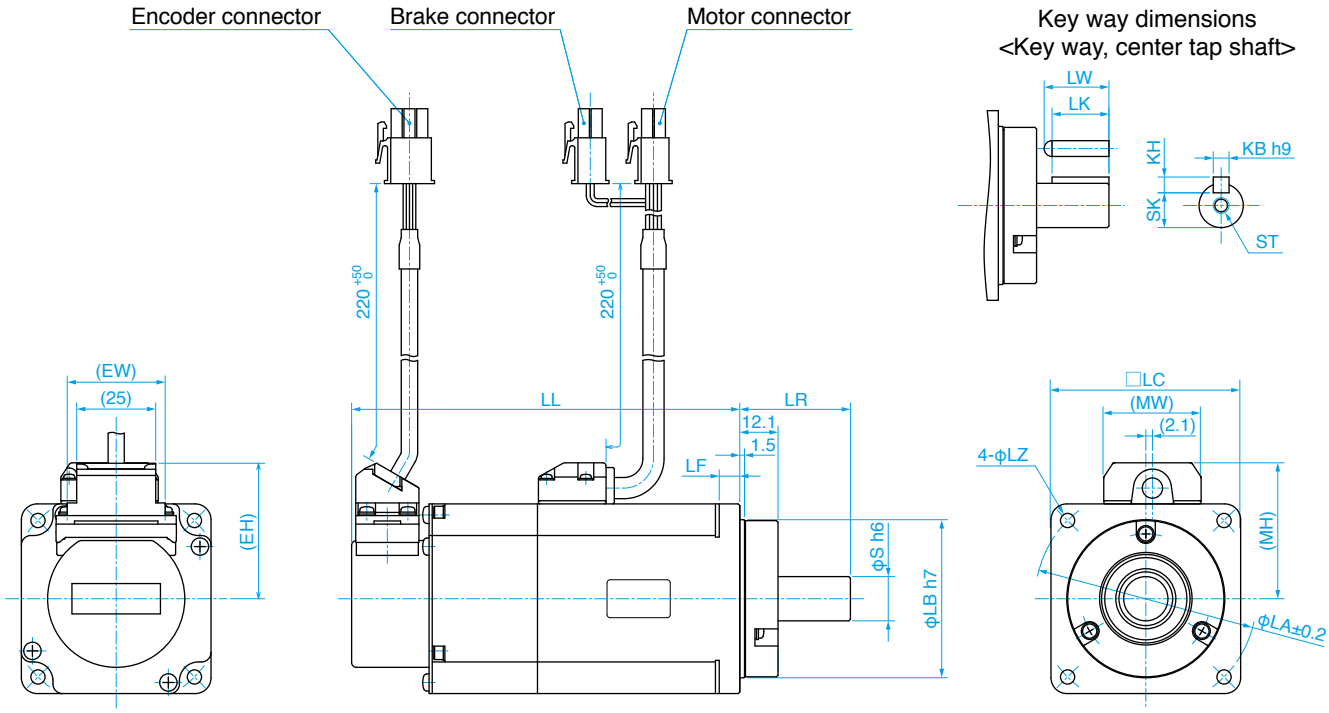

[Unit: mm]

LR		S	LA	LZ	LB	LF	SK	KH	KB	LW	LK	ST	MW	MH	EW	EH
with / without Brake																
with / without oil seal	with protective lip / with oil seal															
25	30	8	46	4.3	30	5	6.2	3	3	14	12.5	M3 depth 6	22.8	33	30	36.3
25	30	8	46	4.3	30	5	6.2	3	3	14	12.5	M3 depth 6	22.8	33	30	36.3
30	35	11	70	4.5	50	6.5	8.5	4	4	20	18	M4 depth 8	30.8	43	31	42.9
30	35	14	70	4.5	50	6.5	11	5	5	25 (20.5)*1	22.5 (18)*1	M5 depth 10	30.8	43	31	42.9
35	40	19	90	6	70	8	15.5	6	6	25	22	M5 depth 10	30.8	53	31	52.7
35	40	19	90	6	70	8	15.5	6	6	25	22	M5 depth 10	30.8	53	31	52.7

*1 Figures in ( ) represent the dimensions of with protective lip / with oil seal.

Special Order *1 Product

*1 Please avoid the motor, or equipment containing the motor to be distributed to Japan, or other regions through Japan.

Build an absolute system with no battery!

Maintenance-free - there is no need to perform battery replacement.

The battery-less absolute encoder is an innovative encoder requiring no hassle inventory management or cost of battery replacement. It contributes to the construction of ecological and economical industrial machines and systems.

- Max speed: 6500r/min (MHMF 50 W to 400 W)
- Low inertia (MSMF) to High inertia (MHMF).
- Low cogging torque: Rated torque ratio 0.5 % (typical value).
- 23-bit absolute encoder (8388608 pulse).

Battery-less absolute encoder motor lineup

	80 mm sq. or less Leadwire type					
	50 W	100 W	200 W	400 W	750 W	1000 W
Low inertia **MSMF**	200 V	200 V	200 V	200 V	200 V	200 V
Middle inertia **MQMF**		200 V	200 V	200 V		
Middle inertia **MDMF**						
Middle inertia **MGMF**						
High inertia **MHMF**	200 V	200 V	200 V	200 V	200 V	200 V

Table description: Voltage specifications — 200 V

[Motor] Model Designation

M	S	M	F	5	A	Z	A	1	A	2	*
①			②	③		④	⑤	⑥	⑦		

Special specifications
M: Special order product *1

① Type

Symbol	Type
MSM	Low inertia (50 W to 1000 W)
MQM	Middle inertia Flat type (100 W to 400 W)
MHM	High inertia (50 W to 1000 W)

② Series

Symbol	Series name
F	A6 family

③ Motor rated output

Symbol	Rated output	Symbol	Rated output
5A	50 W	04	400 W
01	100 W	08	750 W
02	200 W	09	1000 W

④ Voltage specifications

Symbol	Specifications
2	200 V
Z	100 V/ 200 V common (50 W only)

⑤ Rotary encoder specifications

Symbol	Format	Pulse counts	Resolution	Wires
A	Absolute	23-bit	8388608	7

⑥ Design order

Symbol	Specifications
1	Standard

⑦ Motor specifications: 80 mm sq. or less Leadwire type IP65 MSMF 50 W to 1000 W

Symbol		Shaft		Holding brake		Oil seal	
		Round	Key-way, center tap	without	with	without	with
A	2	●		●		●	
B	2	●			●	●	
C	2	●		●			●
D	2	●			●		●
S	2		●	●		●	
T	2		●		●	●	
U	2		●	●			●
V	2		●		●		●

⑦ Motor specifications: 80 mm sq. or less Leadwire type IP65 MQMF 100 W to 400 W, MHMF 50 W to 1000 W

Symbol		Shaft		Holding brake		Oil seal		
		Round	Key-way, center tap	without	with	without	with	With protective lip
A	2	●		●		●		
B	2	●			●	●		
C	2	●		●			●	
C	4	●		●				●
D	2	●			●		●	
D	4	●			●			●
S	2		●	●		●		
T	2		●		●	●		
U	2		●	●			●	
U	4		●	●				●
V	2		●		●		●	
V	4		●		●			●

Table of Model Numbers ●Please refer to the end of this catalog for the software version of the applicable amplifier.

● 80 mm sq. or less 50 W to 1000 W MSMF, MQMF, MHMF Leadwire type IP65

Motor				Driver		Power capacity (at rated load)
Motor series	Power supply	Output (W)	Model No.	A6 series Model No.	Dimension Frame	
MSMF (Leadwire type) 3000 r/min Low inertia	Single phase/ 3-phase 200 V	50	MSMF5AZA1□2M	MADL☆05○★	A-frame	Approx. 0.5 kVA
		100	MSMF012A1□2M			
		200	MSMF022A1□2M	MADL☆15○★		
		400	MSMF042A1□2M	MBDL☆25○★	B-frame	Approx. 0.9 kVA
		750	MSMF082A1□2M	MCDL☆35○★	C-frame	Approx. 1.8 kVA
		1000	MSMF092A1□2M	MDDL☆45○★	D-frame	Approx. 2.4 kVA
MQMF (Leadwire type) 3000 r/min Middle inertia Flat type	Single phase/ 3-phase 200 V	100	MQMF012A1□□M	MADL☆05○★	A-frame	Approx. 0.5 kVA
		200	MQMF022A1□□M	MADL☆15○★		
		400	MQMF042A1□□M	MBDL☆25○★	B-frame	Approx. 0.9 kVA
MHMF (Leadwire type) 3000 r/min High inertia	Single phase/ 3-phase 200 V	50	MHMF5AZA1□□M	MADL☆05○★	A-frame	Approx. 0.5 kVA
		100	MHMF012A1□□M			
		200	MHMF022A1□□M	MADL☆15○★		
		400	MHMF042A1□□M	MBDL☆25○★	B-frame	Approx. 0.9 kVA
		750	MHMF082A1□□M	MCDL☆35○★	C-frame	Approx. 1.8 kVA
		1000	MHMF092A1□□M	MDDL☆55○★	D-frame	Approx. 2.4 kVA

[Motor] □ : For more information, Please refer to "[Motor] Model Designation" in P.15.
[Driver] ☆ ○ ★ : For more information, Please refer to "[Driver] Model Designation" below.

[Driver] Model Designation ●About "☆" "○" "★" in the above table

(☆) Safety Function		(○) I/f specifications	(★) Classification of type	
Symbol	Specifications	Symbol (specification)	Symbol	Specifications
N	without the safety function	S (Analog/Pulse)	E	Basic type (Pulse train only)*2
T	with the safety function		F	Multi fanction type (Pulse, analog, full-closed)
N	without the safety function		G	RS485 communication type (Pulse train only)
N	without the safety function	N (RTEX)	E	Standard for rotary motor
T	with the safety function		F	Multifunction for rotary motor
N	without the safety function	B (EtherCAT)	E	Standard for rotary motor
T	with the safety function		F	Multifunction for rotary motor

*2 Because A6SE series driver (dedicated for position control) does not support the absolute system specification, only incremental system can be used in combination.

[Driver] Dimensions

■ A-frame, B-frame

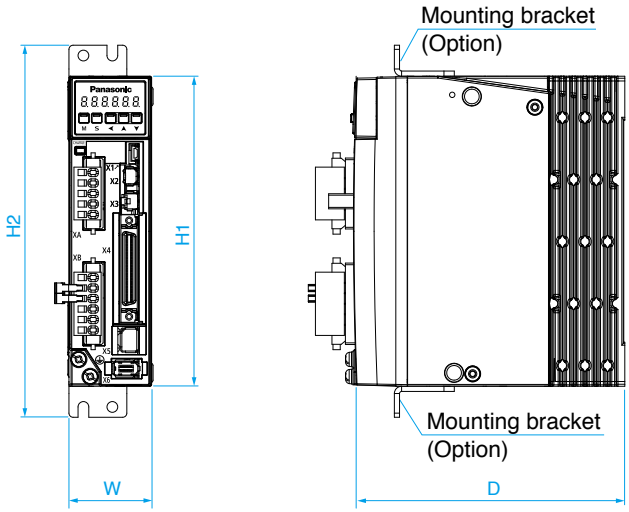

Rack mount type
(Base mount type [Back-end mounting] is also available.)

Frame symbol	W (mm)	H1 (mm)	H2 (mm)	D (mm)	Mass (kg)
A-frame	40	150	180	130	0.8
B-frame	55	150	180	130	1.0

● Please refer to A6 family catalog for details.

■ C-frame, D-frame

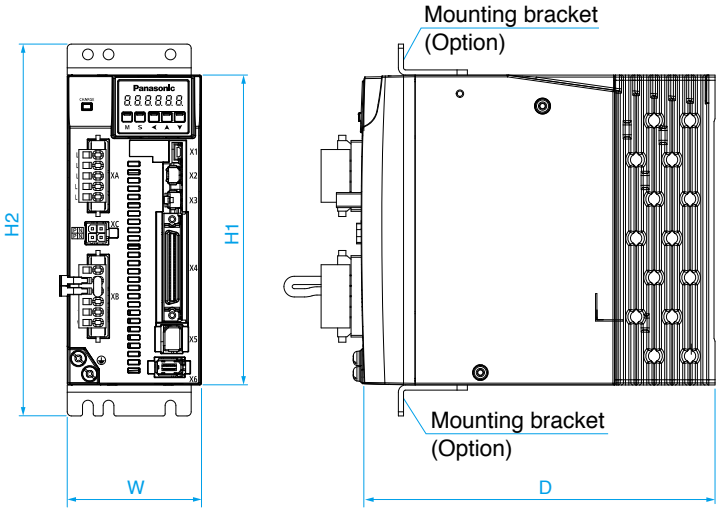

Rack mount type
(Base mount type [Back-end mounting] is also available.)

Frame symbol	W (mm)	H1 (mm)	H2 (mm)	D (mm)	Mass (kg)
C-frame	65	150	180	170	1.6
D-frame	85	150	180	170	2.1

● Please refer to A6 family catalog for details.

Encoder Cable (Option)

Length (m)	Part No.(ex.)
3	MFECA0030EAD
5	MFECA0050EAD
10	MFECA0100EAD

● Please contact us for 10 m to 20 m.

Motor Specifications Special Order Product MSMF type [Low inertia]

Please avoid the motor, or equipment containing the motor to be distributed to Japan, or other regions through Japan.

[Dimension Motor : P.9 Driver : P.17]			50 W	100 W
			AC200 V	AC200 V
Motor model *1		IP65	MSMF5AZA1□2M	MSMF012A1□2M
Applicable driver	Model No.	Multifunction type	MADLT05SF	MADLT05SF
		RS485 communication type *2	MADLN05SG	MADLN05SG
		Basic type *2	MADLN05SE	MADLN05SE
	Frame symbol		A-frame	A-frame
Power supply capacity		(kVA)	0.5	0.5
Rated output		(W)	50	100
Rated torque		(N·m)	0.16	0.32
Continuous stall torque		(N·m)	0.16	0.32
Momentary Max. peak torque		(N·m)	0.48	0.95
Rated current		(A(rms))	1.1	1.1
Max. current		(A(o-p))	4.7	4.7
Regenerative brake frequency (times/min) Note)1		Without option	No limit Note)2	No limit Note)2
		With option	DV0P4281 / No limit Note)2	DV0P4281 / No limit Note)2
Rated rotational speed		(r/min)	3000	3000
Max. rotational speed		(r/min)	6000	6000
Moment of inertia of rotor ($\times 10^{-4}$ kg·m^2)		Without brake	0.026	0.048
		With brake	0.029	0.051
Recommended moment of inertia ratio of the load and the rotor Note)3			30 times or less	30 times or less
Rotary encoder specifications			23-bit Absolute	23-bit Absolute
	Resolution per single turn		8388608	8388608

[Dimension Motor : P.9 Driver : P.17]			200 W	400 W
			AC200 V	AC200 V
Motor model *1		IP65	MSMF022A1□2M	MSMF042A1□2M
Applicable driver	Model No.	Multifunction type	MADLT15SF	MBDLT25SF
		RS485 communication type *2	MADLN15SG	MBDLN25SG
		Basic type *2	MADLN15SE	MBDLN25SE
	Frame symbol		A-frame	B-frame
Power supply capacity		(kVA)	0.5	0.9
Rated output		(W)	200	400
Rated torque		(N·m)	0.64	1.27
Continuous stall torque		(N·m)	0.64	1.27
Momentary Max. peak torque		(N·m)	1.91	3.82
Rated current		(A(rms))	1.5	2.4
Max. current		(A(o-p))	6.5	10.2
Regenerative brake frequency (times/min) Note)1		Without option	No limit Note)2	No limit Note)2
		With option	DV0P4283 / No limit Note)2	DV0P4283 / No limit Note)2
Rated rotational speed		(r/min)	3000	3000
Max. rotational speed		(r/min)	6000	6000
Moment of inertia of rotor ($\times 10^{-4}$ kg·m^2)		Without brake	0.14	0.27
		With brake	0.17	0.3
Recommended moment of inertia ratio of the load and the rotor Note)3			30 times or less	30 times or less
Rotary encoder specifications			23-bit Absolute	23-bit Absolute
	Resolution per single turn		8388608	8388608

● For details of Note)1 to Note)3, refer to the back cover.

*1 □2 in the motor model number represents the motor specifications. Detail of model designation, refer to "[Motor] Model Designation" in P.15.

*2 Basic type and RS485 communication type are "Position control type". Detail of model designation, refer to "[Driver] Model Designation" in P.16.

Motor Specifications Special Order Product MSMF type [Low inertia]

Please avoid the motor, or equipment containing the motor to be distributed to Japan, or other regions through Japan.

[Dimension Motor : P.9 Driver : P.17]			750 W AC200 V
Motor model *1		IP65	MSMF082A1□2M
Applicable driver	Model No.	Multifunction type	MCDLT35SF
		RS485 communication type *2	MCDLN35SG
		Basic type *2	MCDLN35SE
	Frame symbol		C-frame
Power supply capacity (kVA)			1.8
Rated output (W)			750
Rated torque (N·m)			2.39
Continuous stall torque (N·m)			2.39
Momentary Max. peak torque (N·m)			7.16
Rated current (A(rms))			4.1
Max. current (A(o-p))			17.4
Regenerative brake frequency (times/min) Note)1		Without option	No limit Note)2
		With option	DV0P4283 / No limit Note)2
Rated rotational speed (r/min)			3000
Max. rotational speed (r/min)			6000
Moment of inertia of rotor ($\times 10^{-4}$ kg·m^2)		Without brake	0.96
		With brake	1.06
Recommended moment of inertia ratio of the load and the rotor Note)3			20 times or less
Rotary encoder specifications			23-bit Absolute
	Resolution per single turn		8388608

[Dimension Motor : P.9 Driver : P.17]			1000 W AC200 V
Motor model *1		IP65	MSMF092A1□2M
Applicable driver	Model No.	Multifunction type	MDDLT45SF
		RS485 communication type *2	MDDLN45SG
		Basic type *2	MDDLN45SE
	Frame symbol		D-frame
Power supply capacity (kVA)			2.4
Rated output (W)			1000
Rated torque (N·m)			3.18
Continuous stall torque (N·m)			3.18
Momentary Max. peak torque (N·m)			9.55
Rated current (A(rms))			5.7
Max. current (A(o-p))			24.2
Regenerative brake frequency (times/min) Note)1		Without option	No limit Note)2
		With option	DV0P4284 / No limit Note)2
Rated rotational speed (r/min)			3000
Max. rotational speed (r/min)			6000
Moment of inertia of rotor ($\times 10^{-4}$ kg·m^2)		Without brake	1.26
		With brake	1.36
Recommended moment of inertia ratio of the load and the rotor Note)3			15 times or less
Rotary encoder specifications			23-bit Absolute
	Resolution per single turn		8388608

- For details of Note)1 to Note)3, refer to the back cover.

*1 □2 in the motor model number represents the motor specifications. Detail of model designation, refer to "[Motor] Model Designation" in P.15.

*2 Basic type and RS485 communication type are "Position control type". Detail of model designation, refer to "[Driver] Model Designation" in P.16.

Motor Specifications Special Order Product MQMF type [Middle inertia Flat type]

Please avoid the motor, or equipment containing the motor to be distributed to Japan, or other regions through Japan.

[Dimension Motor : P.11 Driver : P.17]			100 W	200 W
			AC200 V	AC200 V
Motor model *1		IP65	MQMF012A1□□M	MQMF022A1□□M
Applicable driver	Model No.	Multifunction type	MADLT05SF	MADLT15SF
		RS485 communication type *2	MADLN05SG	MADLN15SG
		Basic type *2	MADLN05SE	MADLN15SE
	Frame symbol		A-frame	A-frame
Power supply capacity		(kVA)	0.5	0.5
Rated output		(W)	100	200
Rated torque		(N·m)	0.32	0.64
Continuous stall torque		(N·m)	0.33	0.76
Momentary Max. peak torque		(N·m)	1.11	2.23
Rated current		(A(rms))	1.1	1.4
Max. current		(A(o-p))	5.5	6.9
Regenerative brake frequency (times/min) Note)1		Without option	No limit Note)2	No limit Note)2
		With option	DV0P4281 / No limit Note)2	DV0P4283 / No limit Note)2
Rated rotational speed		(r/min)	3000	3000
Max. rotational speed		(r/min)	6500	6500
Moment of inertia of rotor ($\times 10^{-4}$ kg·m^2)		Without brake	0.15	0.50
		With brake	0.18	0.59
Recommended moment of inertia ratio of the load and the rotor Note)3			20 times or less	20 times or less
Rotary encoder specifications			23-bit Absolute	23-bit Absolute
	Resolution per single turn		8388608	8388608

[Dimension Motor : P.11 Driver : P.17]			400 W
			AC200 V
Motor model *1		IP65	MQMF042A1□□M
Applicable driver	Model No.	Multifunction type	MBDLT25SF
		RS485 communication type *2	MBDLN25SG
		Basic type *2	MBDLN25SE
	Frame symbol		B-frame
Power supply capacity		(kVA)	0.9
Rated output		(W)	400
Rated torque		(N·m)	1.27
Continuous stall torque		(N·m)	1.40
Momentary Max. peak torque		(N·m)	4.46
Rated current		(A(rms))	2.1
Max. current		(A(o-p))	10.4
Regenerative brake frequency (times/min) Note)1		Without option	No limit Note)2
		With option	DV0P4283 / No limit Note)2
Rated rotational speed		(r/min)	3000
Max. rotational speed		(r/min)	6500
Moment of inertia of rotor ($\times 10^{-4}$ kg·m^2)		Without brake	0.98
		With brake	1.06
Recommended moment of inertia ratio of the load and the rotor Note)3			20 times or less
Rotary encoder specifications			23-bit Absolute
	Resolution per single turn		8388608

- For details of Note)1 to Note)3, refer to the back cover.

*1 □□ in the motor model number represents the motor specifications. Detail of model designation, refer to "[Motor] Model Designation" in P.15.

*2 Basic type and RS485 communication type are "Position control type". Detail of model designation, refer to "[Driver] Model Designation" in P.16.

Motor Specifications Special Order Product MHMF type [High inertia]

Please avoid the motor, or equipment containing the motor to be distributed to Japan, or other regions through Japan.

[Dimension Motor : P.13 Driver : P.17]			50 W	100 W
			AC200 V	AC200 V
Motor model *1		IP65	MHMF5AZA1□□M	MHMF012A1□□M
Applicable driver	Model No.	Multifunction type	MADLT05SF	MADLT05SF
		RS485 communication type *2	MADLN05SG	MADLN05SG
		Basic type *2	MADLN05SE	MADLN05SE
	Frame symbol		A-frame	A-frame
Power supply capacity (kVA)			0.5	0.5
Rated output (W)			50	100
Rated torque (N·m)			0.16	0.32
Continuous stall torque (N·m)			0.18	0.33
Momentary Max. peak torque (N·m)			0.56	1.11
Rated current (A(rms))			1.1	1.1
Max. current (A(o-p))			5.5	5.5
Regenerative brake frequency (times/min) Note)1		Without option	No limit Note)2	No limit Note)2
		With option	DV0P4281 / No limit Note)2	DV0P4281 / No limit Note)2
Rated rotational speed (r/min)			3000	3000
Max. rotational speed (r/min)			6500	6500
Moment of inertia of rotor ($\times 10^{-4}$ kg·m^2)		Without brake	0.038	0.071
		With brake	0.042	0.074
Recommended moment of inertia ratio of the load and the rotor Note)3			30 times or less	30 times or less
Rotary encoder specifications			23-bit Absolute	23-bit Absolute
	Resolution per single turn		8388608	8388608

[Dimension Motor : P.13 Driver : P.17]			200 W	400 W
			AC200 V	AC200 V
Motor model *1		IP65	MHMF022A1□□M	MHMF042A1□□M
Applicable driver	Model No.	Multifunction type	MADLT15SF	MBDLT25SF
		RS485 communication type *2	MADLN15SG	MBDLN25SG
		Basic type *2	MADLN15SE	MBDLN25SE
	Frame symbol		A-frame	B-frame
Power supply capacity (kVA)			0.5	0.9
Rated output (W)			200	400
Rated torque (N·m)			0.64	1.27
Continuous stall torque (N·m)			0.76	1.40
Momentary Max. peak torque (N·m)			2.23	4.46
Rated current (A(rms))			1.4	2.1
Max. current (A(o-p))			6.9	10.4
Regenerative brake frequency (times/min) Note)1		Without option	No limit Note)2	No limit Note)2
		With option	DV0P4283 / No limit Note)2	DV0P4283 / No limit Note)2
Rated rotational speed (r/min)			3000	3000
Max. rotational speed (r/min)			6500	6500
Moment of inertia of rotor ($\times 10^{-4}$ kg·m^2)		Without brake	0.29	0.56
		With brake	0.31	0.58
Recommended moment of inertia ratio of the load and the rotor Note)3			30 times or less	30 times or less
Rotary encoder specifications			23-bit Absolute	23-bit Absolute
	Resolution per single turn		8388608	8388608

- For details of Note)1 to Note)3, refer to the back cover.

*1 □□ in the motor model number represents the motor specifications. Detail of model designation, refer to "[Motor] Model Designation" in P.15.

*2 Basic type and RS485 communication type are "Position control type". Detail of model designation, refer to "[Driver] Model Designation" in P.16.

[Dimension Motor : P.13 Driver : P.17]			750 W AC200 V
Motor model *1		IP65	MHMF082A1□□M
Applicable driver	Model No.	Multifunction type	MCDLT35SF
		RS485 communication type *2	MCDLN35SG
		Basic type *2	MCDLN35SE
	Frame symbol		C-frame
Power supply capacity (kVA)			1.8
Rated output (W)			750
Rated torque (N·m)			2.39
Continuous stall torque (N·m)			2.86
Momentary Max. peak torque (N·m)			8.36
Rated current (A(rms))			3.8
Max. current (A(o-p))			18.8
Regenerative brake frequency (times/min) Note)1		Without option	No limit Note)2
		With option	DV0P4283 / No limit Note)2
Rated rotational speed (r/min)			3000
Max. rotational speed (r/min)			6000
Moment of inertia of rotor ($\times 10^{-4}$ kg·m^2)		Without brake	1.56
		With brake	1.66
Recommended moment of inertia ratio of the load and the rotor Note)3			20 times or less
Rotary encoder specifications			23-bit Absolute
	Resolution per single turn		8388608

[Dimension Motor : P.13 Driver : P.17]			1000 W AC200 V
Motor model *1		IP65	MHMF092A1□□M
Applicable driver	Model No.	Multifunction type	MDDLT55SF
		RS485 communication type *2	MDDLN55SG
		Basic type *2	MDDLN55SE
	Frame symbol		D-frame
Power supply capacity (kVA)			2.4
Rated output (W)			1000
Rated torque (N·m)			3.18
Continuous stall torque (N·m)			3.34
Momentary Max. peak torque (N·m)			11.1
Rated current (A(rms))			5.7
Max. current (A(o-p))			28.2
Regenerative brake frequency (times/min) Note)1		Without option	No limit Note)2
		With option	DV0P4284 / No limit Note)2
Rated rotational speed (r/min)			3000
Max. rotational speed (r/min)			6000
Moment of inertia of rotor ($\times 10^{-4}$ kg·m^2)		Without brake	2.03
		With brake	2.13
Recommended moment of inertia ratio of the load and the rotor Note)3			15 times or less
Rotary encoder specifications			23-bit Absolute
	Resolution per single turn		8388608

- For details of Note)1 to Note)3, refer to the back cover.

*1 □□ in the motor model number represents the motor specifications. Detail of model designation, refer to "[Motor] Model Designation" in P.15.

*2 Basic type and RS485 communication type are "Position control type". Detail of model designation, refer to "[Driver] Model Designation" in P.16.

■ Notes on [Motor specification] page

Note) 1. Regenerative resistors are not built in drivers of A and B frames. When regeneration occurs, prepare an optional external regenerative resistor.

[At AC100 V of power voltage]

Regenerative brake frequency represents the frequency of the motor's stops from the rated speed with deceleration without load.

- If the load is connected, frequency will be defines as 1/(m+1), where m=load moment of inertia/rotor moment of inertia.
- When the motor speed exceeds the rated speed, regenerative brake frequency is in inverse proportion to the square of (running speed/rated speed).
- Power supply voltage is AC115 V (at 100 V of the main voltage).
  If the supply voltage fluctuates, frequency is in inverse proportion to the square of (Running supply voltage/115) relative to the value in the table.
- When regeneration occurs continuously such cases as running speed frequently changes or vertical feeding, consult us or a dealer.

[At AC200 V of power voltage]

Regenerative brake frequency represents the frequency of the motor's stops from the rated speed with deceleration without load.

- If the load is connected, frequency will be defines as 1/(m+1), where m=load moment of inertia/rotor moment of inertia.
- When the motor speed exceeds the rated speed, regenerative brake frequency is in inverse proportion to the square of (running speed/rated speed).
- Power supply voltage is AC230 V (at 200 V of the main voltage).
  If the supply voltage fluctuates, frequency is in inverse proportion to the square of (Running supply voltage/230) relative to the value in the table.
- When regeneration occurs continuously such cases as running speed frequently changes or vertical feeding, consult us or a dealer.

Note) 2. If the effective torque is within the rated torque, there is no limit in generative brake.

Note) 3. Consult us or a dealer if the load moment of inertia exceeds the specified value.

■ Please contact us for Brake specifications, Permissible load, Environmental Conditions, Mass of motor.

■ About motor options

Other optional products such as motor cables are the same as the A6 series options. Please refer to A6 family catalog.

■ Software version of applicable amplifier

Driver / Series number	Software version	Timing
A6SE / A6SF / A6SG Series	Ver1.09	Production lot in Sep 2018
A6NE / A6NF Series	Ver1.23	Production lot in May 2018
A6BE / A6BF Series	Ver1.04	Production lot in Aug 2018

Repair	Consult to the dealer from whom you have purchased this product for details of repair work. When the product is incorporated to the machine you have purchased, consult to the machine manufacturer or its dealer.
URL	Electronic data of this product (Instruction Manual, CAD data) can be downloaded from the following web site; industrial.panasonic.com/ac/e/

● Contact to : ————————————————

Panasonic Corporation,
Industrial Device Business Division
1006,Oaza Kadoma,Kadoma-shi,Osaka 571-8506,Japan

The contents of this catalog apply to the products as of October 2019.

■AQCTB0104E 201910