SS-EC Step-Servo

- Intelligent built-in controller
  - Enhanced motor optimized design long life
    - Efficient smooth accurate fast
      - Low vibration low noise low heat

EtherCAT®

RoHS Compliant

MOONS'
moving in better ways

www.motiontech.com.au

The SS-EC is a member of Step-Servo family equipped with built-in EtherCAT communication interface. This drive can operate as a standard EtherCAT slave using CANopen over EtherCAT (CoE). This drive can be combined with various associated step servo motors.

- Programmable, digital step-servo drive and motor package
- Operates from a 24 to 70 volt DC power supply
- CANopen over EtherCAT (CoE) with full support of CiA402. Based on the widely used 100BASE-TX cabling system and with a baud rate of 100Mbps full-duplex, EtherCAT enables high speed and high reliable communication
- Dual port EtherCAT communication
- USB port for configuration
- Encoder resolution: 20000 counts/rev for AM17/23/24/34SS motor, 4096 counts/rev for AM11SS motor
- SS03-EC output current: continuous 3A, boost 4.5A
- SS05-EC output current: continuous 5A, boost 7.5A
- SS10-EC output current: continuous 10A, boost 15A
- 8 optically isolated digital inputs, 5-24VDC high level voltage
- 4 optically isolated digital outputs, max 30V/100mA sink or source current
- 2 analog inputs, can be configured to 0-5V, 0-10V, ±5V or ±10V signal ranges.
- Differential encoder signal output (AOUT ±, BOUT ±, ZOUT ±)
  26C31 line driver, 20mA sink or source current
- Auxiliary power supply for keep alive operation
- 4 keys and 5 digital LED display for parameters setting
- STO function (Safe Torque Off)

Closed Loop

- Very tight position and velocity control for the most demanding applications.
- Robust servo loops that tolerate wide fluctuation in load inertia and frictional loading.
- Precise positioning to within ±1 count using high resolution encoder (20000 counts/rev for AM17/23/24/34SS motor, 4096 counts/rev for AM11SS motor).

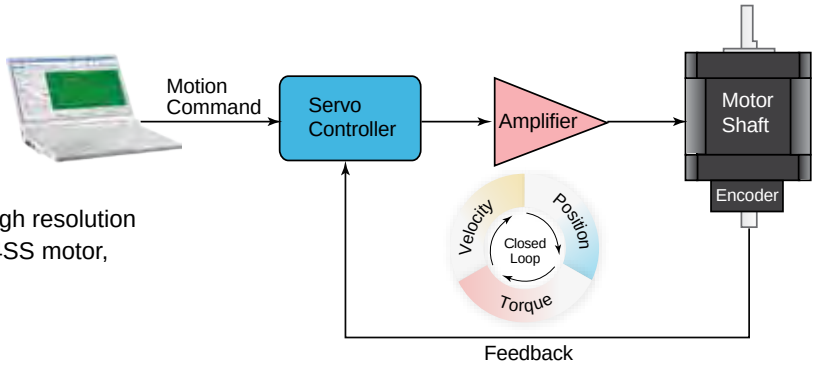

Low Heating/High Efficiency

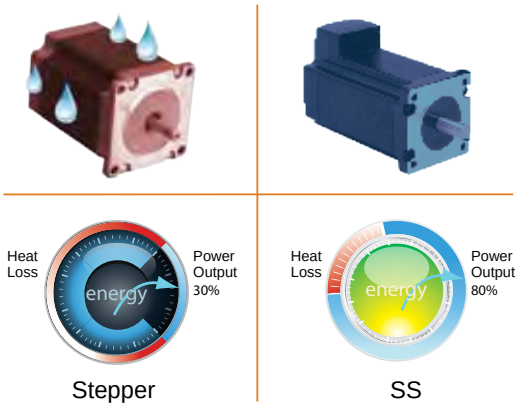

- Uses only the current required by the application, generating minimum heat output.
- When stand-still, current can reach nearly zero for extremely low heat output.
- Being able to use almost 100% of torque, allows for more efficient and compact motor usage.

Smooth & Accurate

- Space vector current control with 5000 line high resolution encoder, gives smooth and quiet operation, especially at low speeds.
  ------A feature never found with traditional stepping motors
- High stiffness due to the nature of the stepping motor combined with the highly responsive servo control
  ------Accurate position control both while running and static positioning

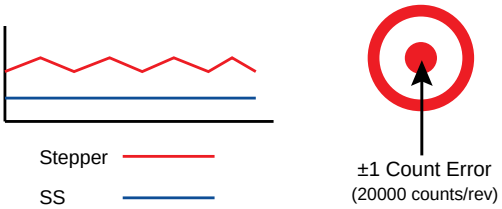

Fast Response

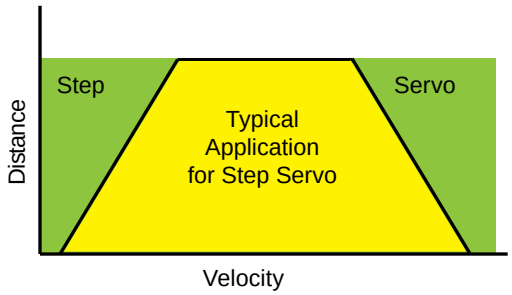

- When performing fast point-to-point moves, the high torque output and advanced servo control provides a very responsive system far exceeding what can be done with a conventional stepper system.

High Torque

- Because the **Step-Servo** operates in full servo mode, all the available torque of the motor can be used.
- The motor can provide as much as 50% more torque in many applications. High torque capability often eliminates the need for gear reduction.
- Boost torque capability can provide as much as 50% more torque for short, quick moves.

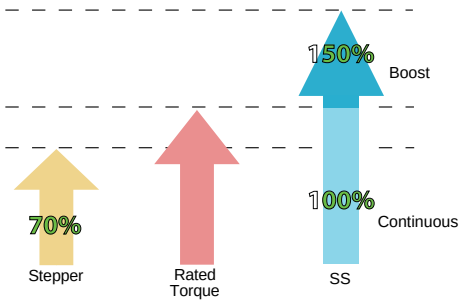

Motion Monitoring

- For difficult control situations where performing a precise move is necessary, the **Step-Servo** Quick Tuner provide an easy to use interface for performing and monitoring the motion profile.
- Many common parameters such as Actual Speed or Position Error can be monitored to evaluate system performance.
- The monitoring is interactive with the servo tuning capability so that optimum performance can be achieved.

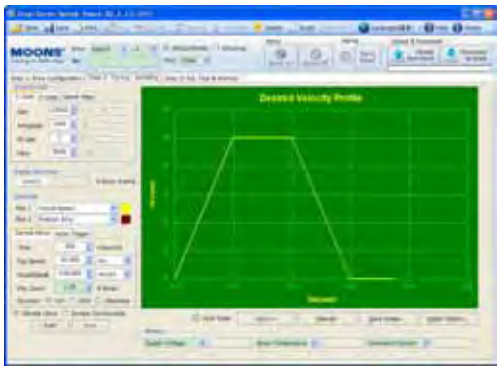

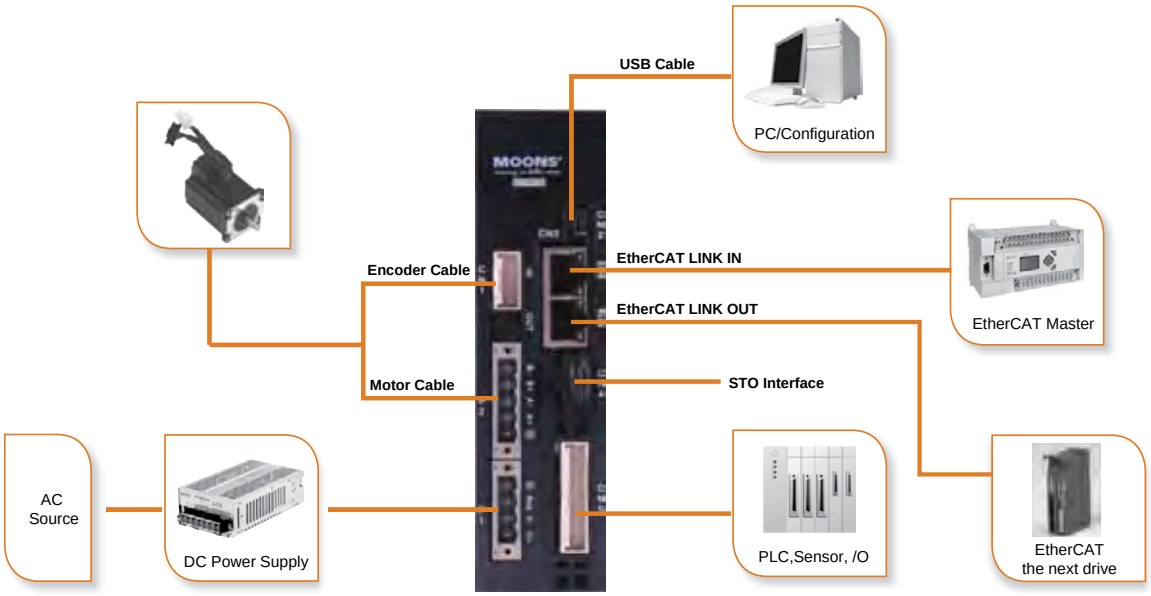

Specifications

Power Amplifier	
Amplifier Type	Dual H-Bridge, 4 Quadrant
Current Control	4 state PWM at 20 KHz
Output Current	SS03 Maximum continuous current 3A, boost current 4.5A (for 1.5s) Drive auto-set the current limitation according to the attached motor
	SS05 Maximum continuous current 5A, boost current 7.5A (for 1.5s) Drive auto-set the current limitation according to the attached motor
	SS10 Maximum continuous current 10A, boost current 15A (for 1.5s) Drive auto-set the current limitation according to the attached motor
Power Supply	External nominal 24 - 70 volt DC power supply required Absolute maximum input voltage range 18 - 75 VDC
Protection	Over-voltage, under-voltage, over-temp, over-current
Controller	
Microstep Resolution	Software selectable from 200 to 51200 steps/rev in increments of 2 steps/rev
Encoder Resolution	20000 counts/rev for AM17/23/24/34SS motor; 4096 counts/rev for AM11SS motor
Speed Range	Speeds up to 3600 rpm
Filters	Programmable hardware digital noise filter, software noise filter, smoothing filter, PID filter, notch filter
Non-Volatile Storage	Configurations are saved in FLASH memory on-board the DSP
Digital Inputs	X1, X2, X3, X4: Optical isolated, differential, 5-24VDC, minimum pulse width 250ns, maximum pulse frequency 2MHz X5, X6, X7, X8: Optical isolated, single-ended input, 5 - 24 volts
Digital Output	Y1, Y2, Y3, Y4 Optical isolated, Open Collector, 30 volts, 100 mA max, maximum pulse frequency 10 KHz
Analog Input	AIN1, AIN2 Input resolution 12-bit, software configured as 0-5 volts, 0-10 volts, ±5 volts or ±10 volts (AIN referenced to GND)
+5V Supply Output	+4.8 - 5 volts @ 100mA maximum
Communication	EtherCAT and mini USB
Environment	
Ambient Temperature	0 - 40°C (32 - 104°F) when mounted to a suitable heatsink
Humidity	90% non-condensing

Dimensions(Unit:mm)

Visit www.moonsindustries.com to get the 3D drawings.

◇ Motor

AM11SS

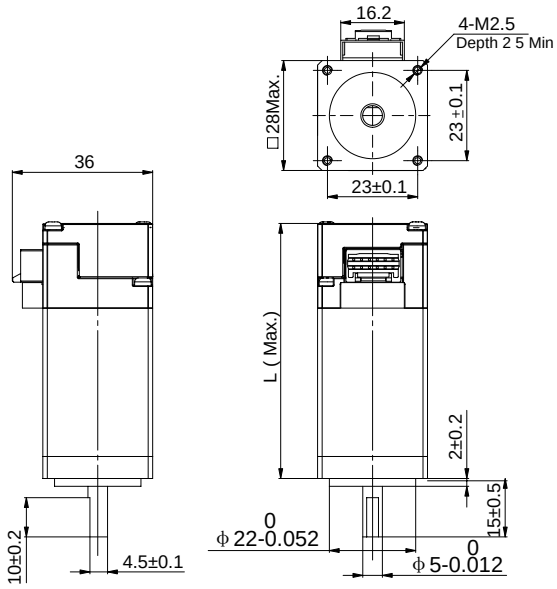

Model	L
AM11SS1DMA	43.8
AM11SS2DMA	52.9
AM11SS3DMA	64.1

AM17SS

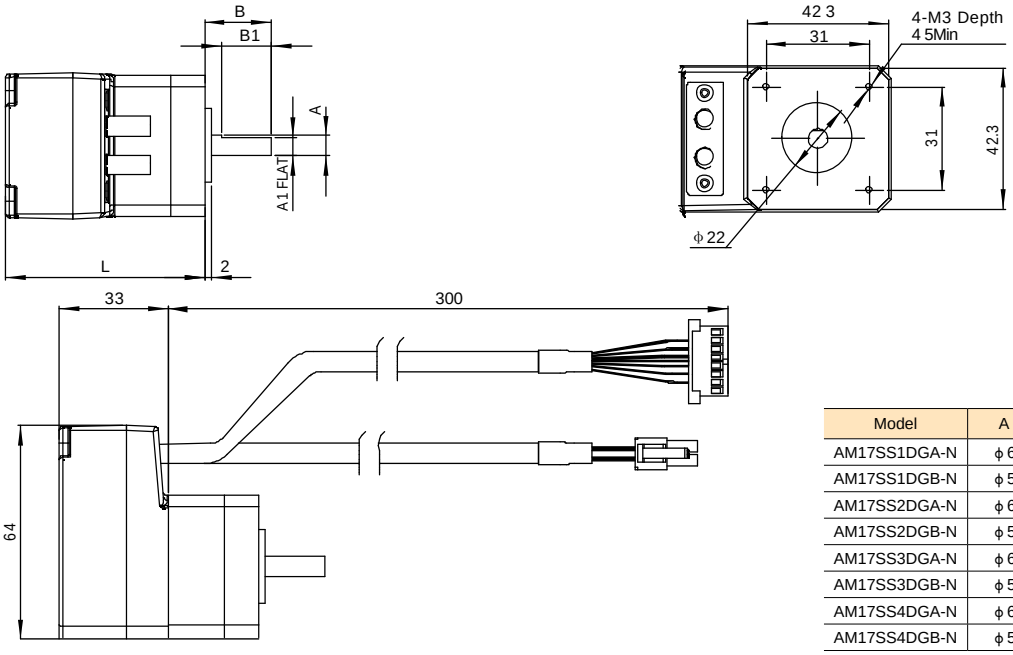

Model	A	A1	B	B1	L
AM17SS1DGA-N	ϕ6	5.5	20	15	59 5
AM17SS1DGB-N	ϕ5	4.5	24	15	59 5
AM17SS2DGA-N	ϕ6	5.5	20	15	65
AM17SS2DGB-N	ϕ5	4.5	24	15	65
AM17SS3DGA-N	ϕ6	5.5	20	15	73 5
AM17SS3DGB-N	ϕ5	4.5	24	15	73 5
AM17SS4DGA-N	ϕ6	5.5	20	15	89
AM17SS4DGB-N	ϕ5	4.5	24	15	89

AM23SS

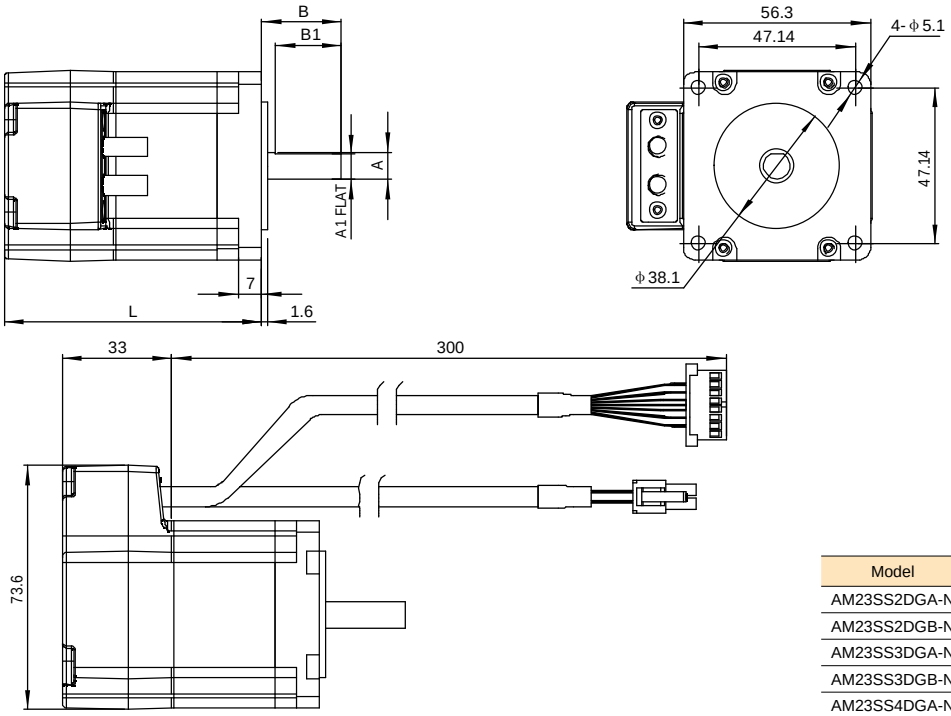

Model	A	A1	B	B1	L
AM23SS2DGA-N	ϕ 8	7.5	24	20	77 5
AM23SS2DGB-N	ϕ 6 35	5.85	20	15	77 5
AM23SS3DGA-N	ϕ 8	7.5	24	20	99 5
AM23SS3DGB-N	ϕ 6 35	5.85	20	15	99 5
AM23SS4DGA-N	ϕ 8	7.5	24	20	102.5

AM24SS

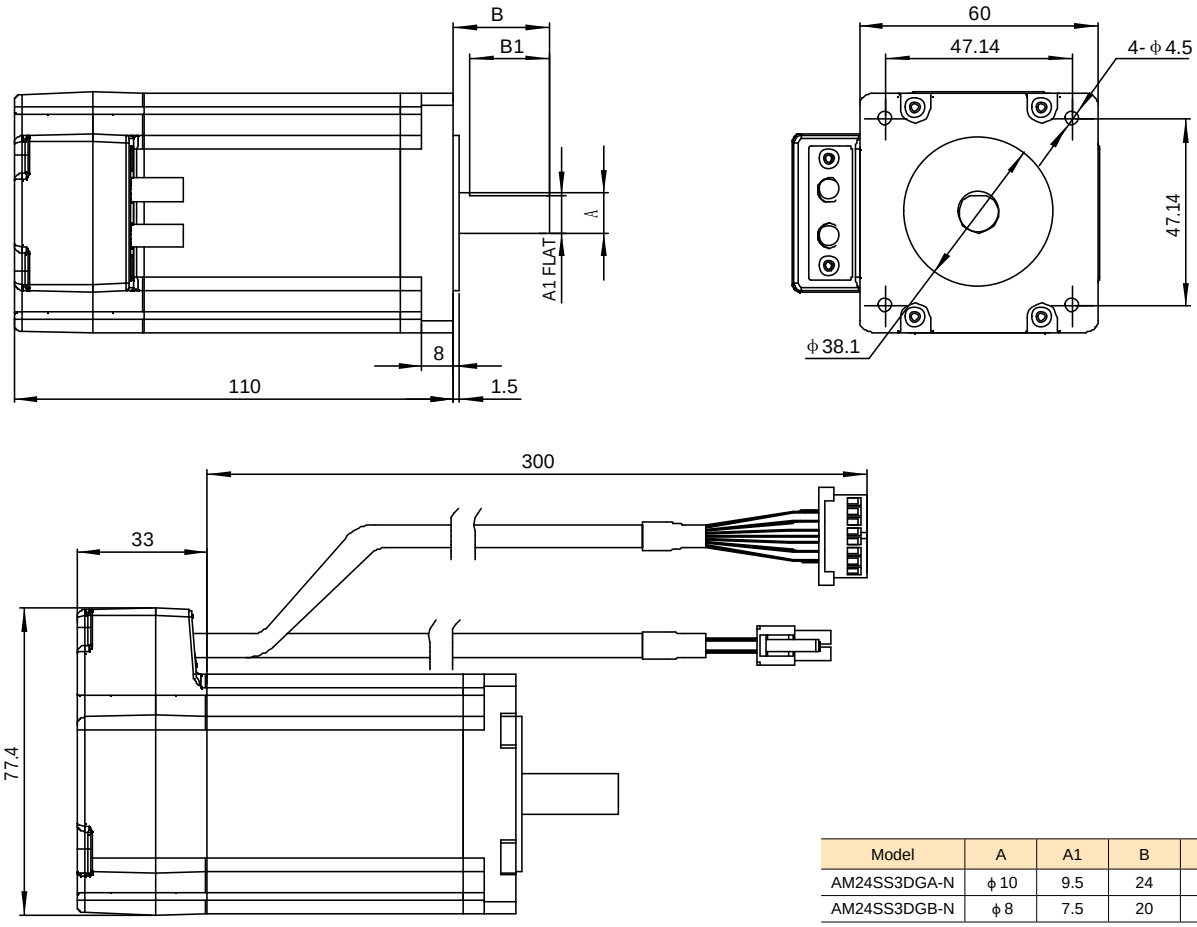

Model	A	A1	B	B1
AM24SS3DGA-N	ϕ 10	9.5	24	20
AM24SS3DGB-N	ϕ 8	7.5	20	15

AM34SS

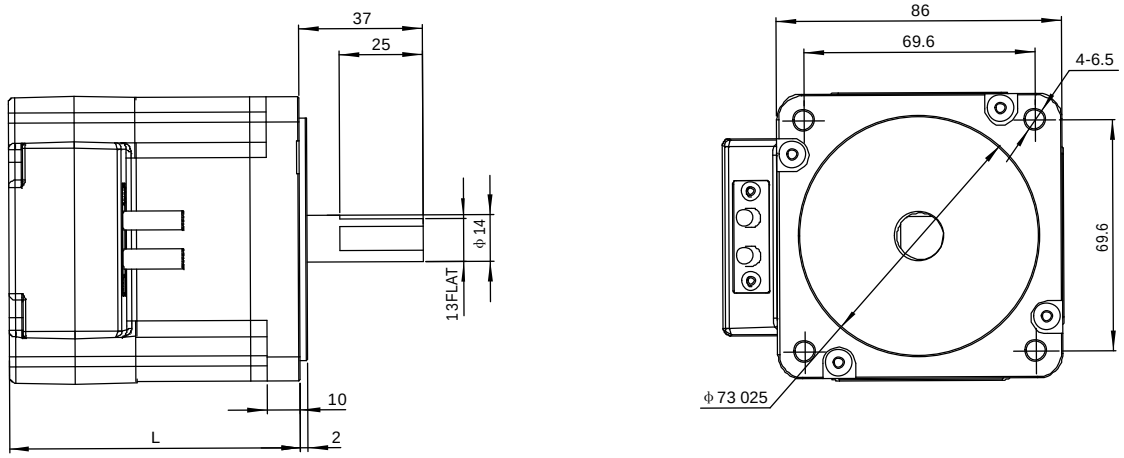

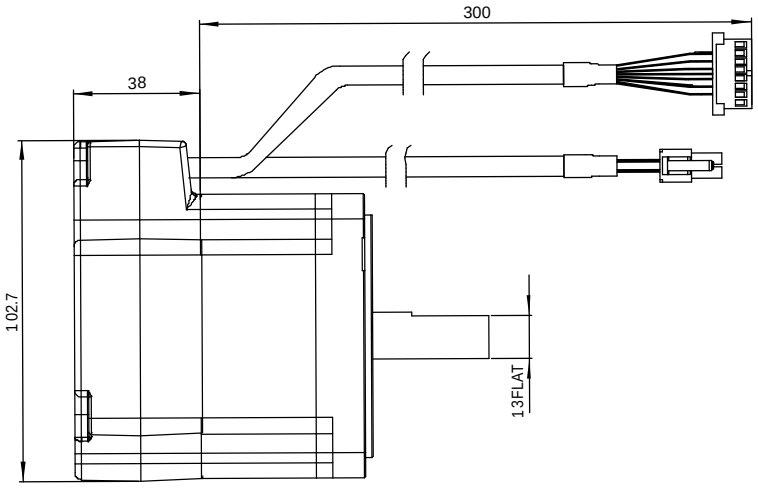

Model	L
AM34SS1DGA-N	88
AM34SS3DGA-N	117.5
AM34SS5DGA-N	147

◇ Drive

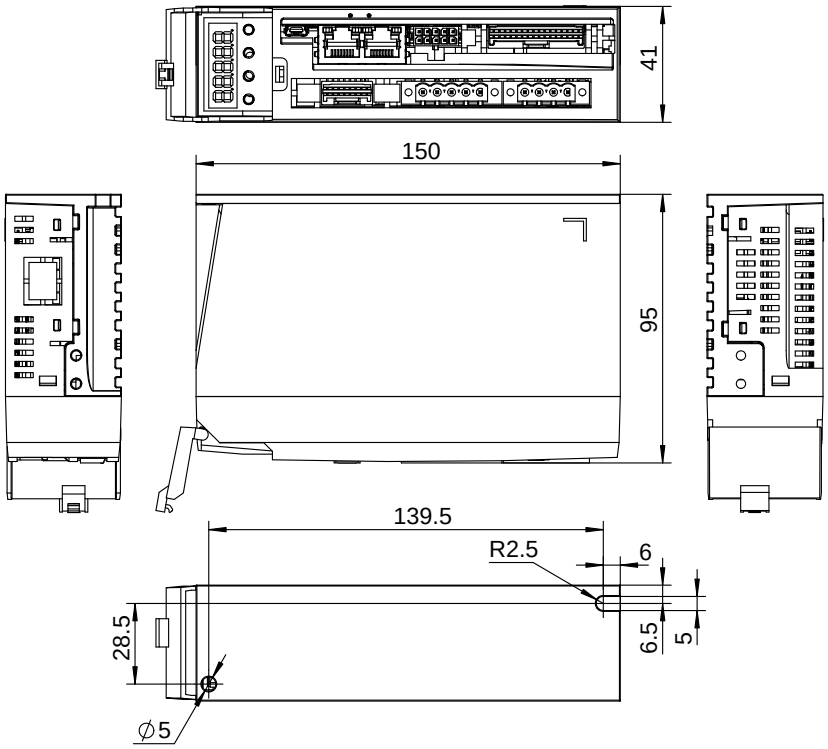

Motor Specifications

Motor Part Number	Matching Drive	Holding Torque	Rotor Inertia	Encoder Resolution	Maximum Speed	Mass	Frame Size	Permissible Overhung Load(N) Distance(L) from Shaft End(mm)					Permissible Thrust Load
		N•m	g•cm²	counts/rev	RPM	g		0	5	10	15	20	
AM11SS1DMA	SS03-EC-D	0.065	9	4096	3600	118	28mm	20	25	34	52	-	Less than the motor mass
AM11SS2DMA		0.08	12			168							
AM11SS3DMA		0.125	18			218							
AM17SS1DG □ -N	SS03-EC-D or SS05-EC-D	0.3	38	20000		390	42mm	35	44	58	85	-	
AM17SS2DG □ -N		0.5	57			440							
AM17SS3DG □ -N		0.6	82			520							
AM17SS4DG □ -N		0.75	123			760							
AM23SS2DG □ -N	SS05-EC-D	0.9	260			850	56mm	63	75	95	130	190	
AM23SS3DG □ -N		1.5	460			1250							
AM23SS4DGA-N		2.5	365			840							
AM24SS3DG □ -N	SS10-EC-D	2.5	900			1650	60mm	90	100	130	180	270	
AM34SS1DGA-N		3.5	915			2000	80mm	260	290	340	390	480	
AM34SS3DGA-N		6.0	1480			3100							
AM34SS5DGA-N		8.0	2200			4200							

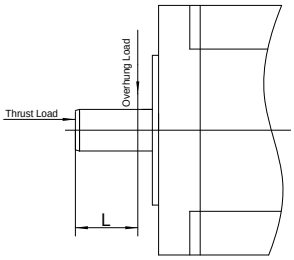

□：A or B, refer to motor part numbering system

◇ Torque Curves

AM11SS Series

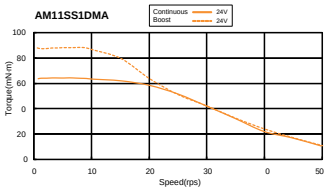

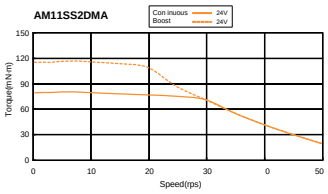

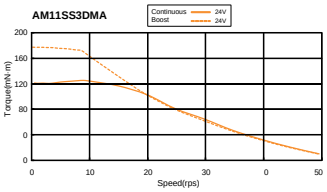

AM17SS Series

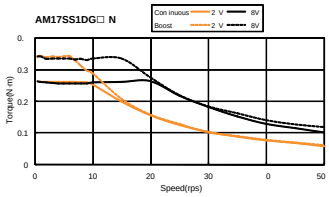

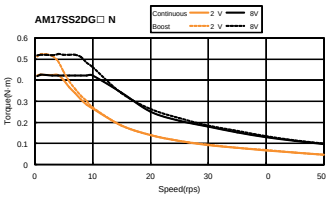

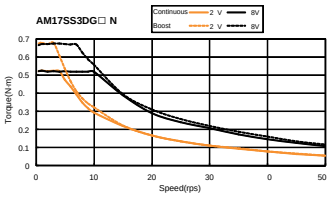

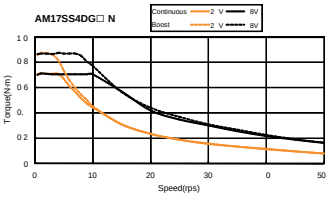

AM23SS Series

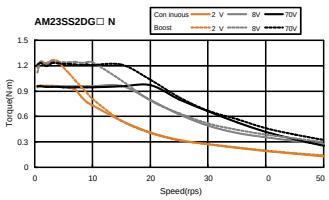

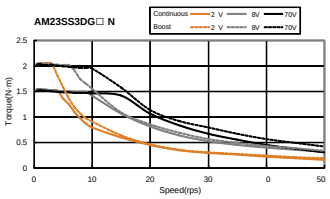

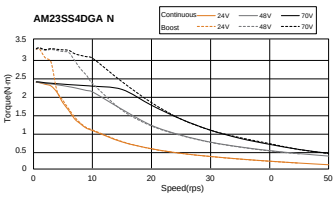

AM24SS Series

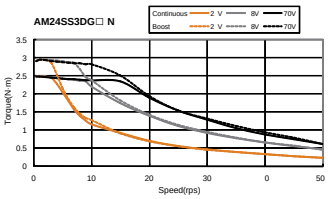

AM34SS Series

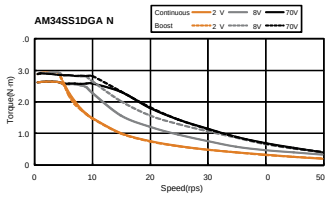

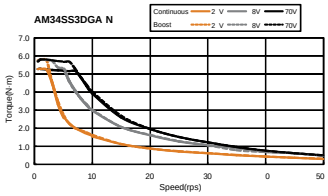

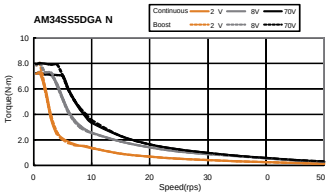

Numbering System

AM17 SS 1 D G A-N

- Frame Size: 11,17,23,24,34
- Step Servo
- Motor Size: 1 = 1Stack, 2 = 2Stack, 3 = 3Stack, 4 = 4Stack, 5 = 5Stack
- D=DC Input
- Encoder: G=5000-Line, M=1024-Line
- Mechanical Option
  - A=Output shaft size: 11: ϕ5, 17: ϕ6, 23: ϕ8, 24: ϕ10, 34: ϕ14
  - B=Output shaft size: 17: ϕ5, 23: ϕ6.35, 24: ϕ8

Note: AM17/23/24/34SS motors matching wi h SS-EC drive have -N suffix
AM11SS motors matching with SS-EC drive DO NOT have -N suffix

SS 05 - EC - D

- Step Servo
- Output Current: 03 - 3A, 05 - 5A, 10 - 10A
- EC=E herCAT
- D=Dual-port Ethernet

Optional Accessories (Sold separately)

◇ I/O Cable

P/N	Length(L)
1117-200	2M

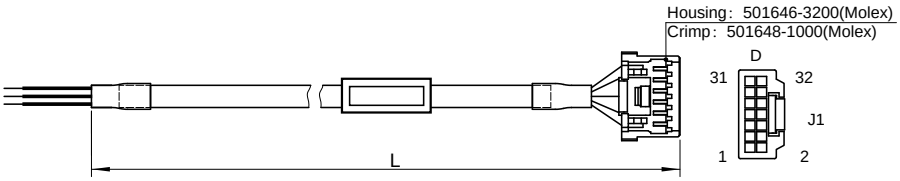

◇ Motor Extension Cable between SS-EC drive and AM11SS motor

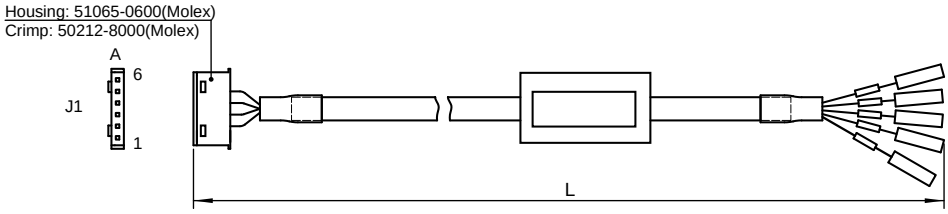

P/N	Length(L)
1127-100	1M
1127-300	3M
1127-500	5M
1127-1000	10M

Wiring Diagram	
PIN(J1)	Colour(Signal)
1	Blue(B-)
3	Red(B+)
4	Green(A-)
6	Black(A+)

◇ Motor Extension Cable between SS-EC drive and AM17/23/24/34SS-N motor

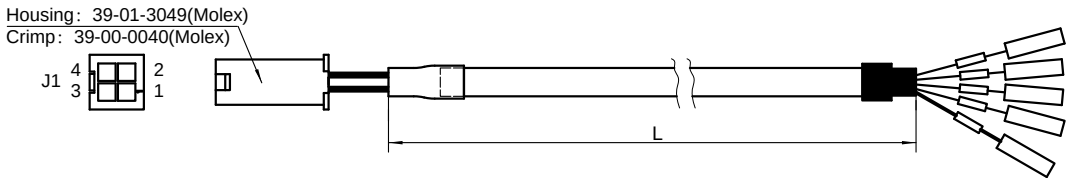

P/N	Length(L)
1114-100	1M
1114-300	3M
1114-500	5M
1114-1000	10M

Wiring Diagram	
PIN(J1)	Colour(Signal)
1	Blue(B-)
2	Red(B+)
3	Green(A-)
4	Black(A+)

◇ Encoder Extension Cable between SS-EC drive and AM11SS Motor

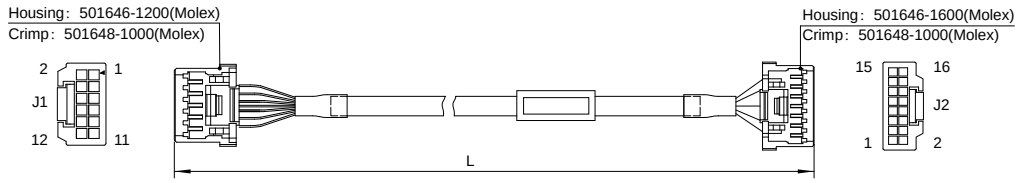

P/N	Length(L)
2118-100	1M
2118-300	3M
2118-500	5M
2118-1000	10M

Wiring Diagram					
PIN(J1)	Colour(Signal)	PIN(J2)	PIN(J1)	Colour(Signal)	PIN(J2)
10	Blue(A+)	1		Brown(U+)	
9	Blue/Black(A-)	2		Brown/Black(U-)	
8	Green(B+)	3		Gray(V+)	
7	Green/Black(B-)	4		Gray/Black(V-)	
6	Yellow(Z+)	5	1	White(W+)	15
5	Yellow/Black(Z-)	6	2	White/Black(W-)	16
3	Red(+5V)	7	12	Shield	10
4	Black(GND)	8			

◇ Encoder Extension Cable between SS-EC drive and AM17/23/24/34SS-N Motor

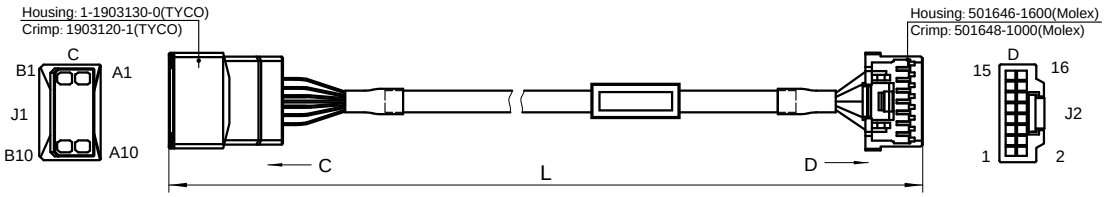

P/N	Length(L)
2117-100	1M
2117-300	3M
2117-500	5M
2117-1000	10M

Wiring Diagram					
PIN(J1)	Colour(Signal)	PIN(J2)	PIN(J1)	Colour(Signal)	PIN(J2)
A9	Blue(A+)	1	B5	Shield	10
B9	Blue/Black(A-)	2	A4	Brown(U+)	11
A8	Green(B+)	3	B4	Brown/Black(U-)	12
B8	Green/Black(B-)	4	A3	Gray(V+)	13
A7	Yellow(Z+)	5	B3	Gray/Black(V-)	14
B7	Yellow/Black(Z-)	6	A2	White(W+)	15
A6	Red(+5V)	7	B2	White(W+)	16
B6	Black(GND)	8			

◇ USB Cable

P/N	Length(L)
2620-150	1.5M

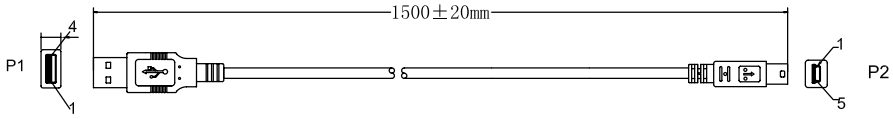

◇ Network Cable

Common Type	Shielded Type	Length(L)
2012-030 *	2013-030	0.3M
2012-300	2013-300	3M

* 2012-030 is included in the drive package.

Distributors for Australia & New Zealand

MOTION TECHNOLOGIES PTY LTD

24/22-30 Northumberland Road
Caringbah NSW 2229 Australia
Phone: (02) 9524 4782
Fax: (02) 9525 3878

sales@motiontech.com.au
www.motiontech.com.au

CHINA / 1ST PRINT / 17TH / MAY / 2016

http://www.moonsindustries.com

MOONS'
moving in better ways

- All the specifications, technical parameters of the products provided in this catalog are for reference only, subject to change without notice. For the latest details, please contact our sales department.