COLUMBUS McKINNON

Cubic Screw Jacks

www.motiontech.com.au

PFAFF silberblau

ALLTEC antriebstechnik

Application Examples

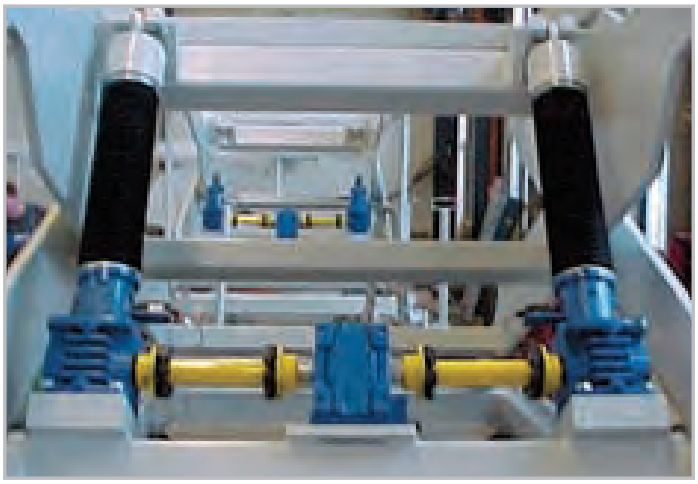

Scissors elevating platform with swivelling configuration HSE high performance worm gear screw jack, configuration type 1, synchronized as tandem drive via connecting shaft.

HSE high performance worm gear screw jack, special configuration for an elevation movement from 0 °C to 90 °C of an 11,1 m antenna.

Manufacturer's illustration:
SBS Bühnentechnik GmbH
Multi-screw lifting system (HSE high performance worm gear screw jacks) with safety device according to with BGV C1 (VBG 70) for adjusting hall platforms in the Culture Centre in Frankfurt/Oder. Synchronization is effected by means of bevel gear boxes and connecting shafts.

Application Examples

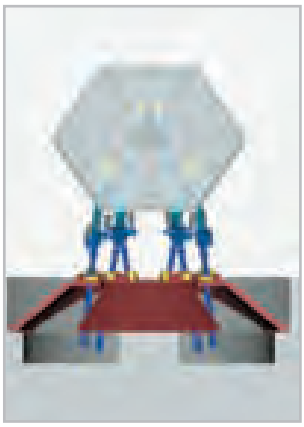

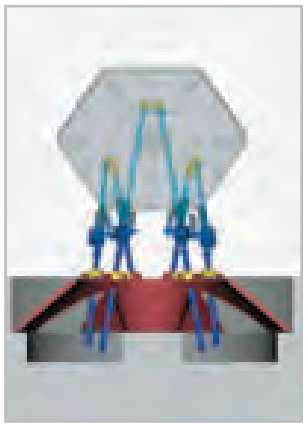

Manufacturer's illustrations:
VERTEX ANTENNENTECHNIK GmbH
Parallel kinematics as drive system of a radio-astronomic receiver unit, consisting of 6 HSE high performance worm gear screw jacks with a lift of 3,500 mm. The system is used for precise positioning of several radio telescopes which are installed on one platform.

Manufacturer's illustration: Mero Airporttechnik
High performance worm gear screw jacks for adjusting the height of aircraft maintenance platforms.

Extract from our catalogue

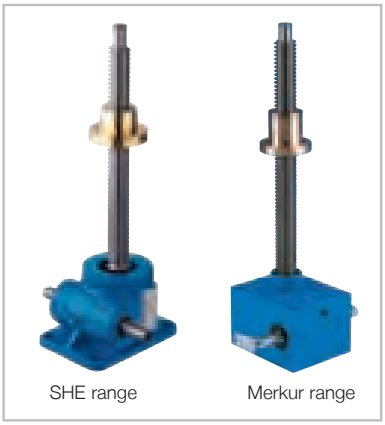

Standard worm gear screw jacks SHE and cubic **MERKUR** elements for standard applications

HSE high performance worm gear screw jacks for highly-demanding dynamic applications

SHG quick-lifting screw jacks for extremely high-speed lifting operations

Special lifting elements configured to customer-specific requirements

Bevel gear boxes

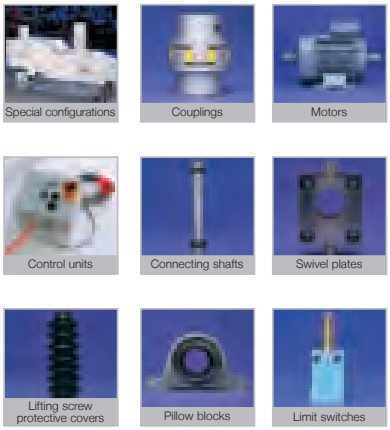

Accessories for lifting elements and screw lifting systems

Three-axis functioning model

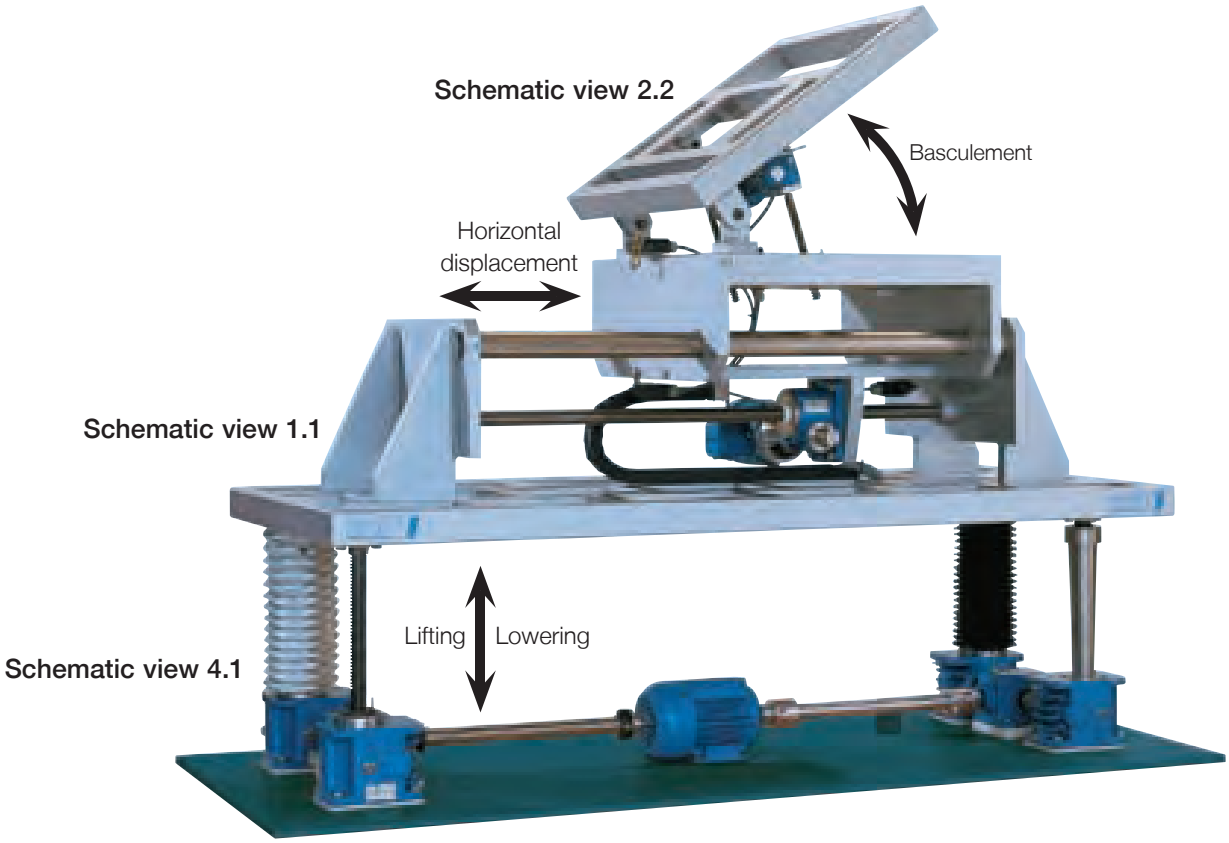

Schematic view 2.2
- 2 x type 2 worm gear screw jack
- Swivelling consoles
- Electric motor

Schematic view 1.1
- 1 x type 1 worm gear screw jack
- Coupling
- Connecting flange
- Frequency-controlled electric motor

Schematic view 4.1
- 4 x type 1 worm gear screw jack
- Bevel gear boxes
- Connecting shafts
- Couplings
- Electric motor

1.1 System solutions

Installation of lifting system with flexible protection boots for approx. 9 m of lift.
Manufacturer's illustration
MT Aerospace AG

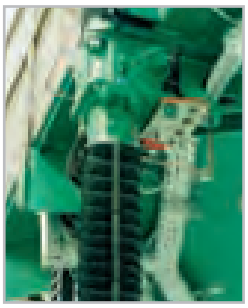

Drive system layout
We can supply precise, reliable configured drive units, connecting shafts, bevel gear boxes, motors etc. that conform both to current industrial-machine legislation and standards and to your exact function requirements.

Engineering
Your proposals become our objectives where project planning and construction support for special individual configuration and calculation methods conforming to EN 1570, EN 280, EN 1756, EN 1493 (VBG14) and BGV C1 (VBG 70) are concerned. Ask your technical adviser about our construction support services.

Control units
Demand reliability and clear thinking: Whether you are looking for positioning control units that function via frequency-regulated individual drive systems for SLAVE-MASTER operation, or controls for universal applications and operating conditions – we supply the support you need.

Service
Customer satisfaction always occupies the head of our "to-do" list, which is why we supply you with full support during the installation process, while helping to ensure that everything conforms to EN 1570, EN 280, EN 1756, EN 1493 (VBG 14) and that the screw jack lifting systems and components are all duly certified.

Delivery dates you can rely on
Time is too valuable to be wasted on waiting for late deliveries, so you can rely on our promised delivery times – regardless of whether you have ordered standard jacking elements, modified units or series-produced special configurations. Just check it out.

2.2 Suggestions for installation

2.2.1 Vertical installation

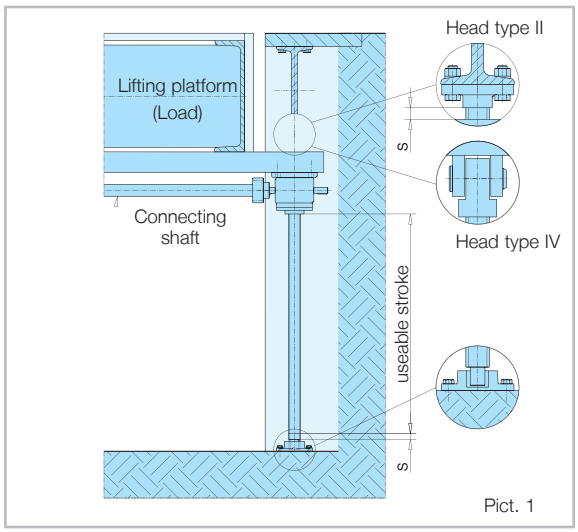

Recommended arrangement for large lifting capacities and long screws

Tensile load

Design: Configuration type 1
With climbing screw jacks (without protection tube)

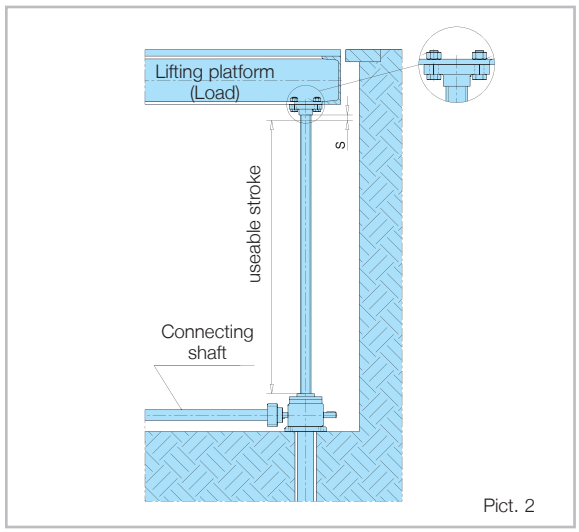

Compression-loaded screws without lateral guides

Dimensioning of screw according to Euler's case I

Design: Configuration type 1
With lifting screw and protection tube

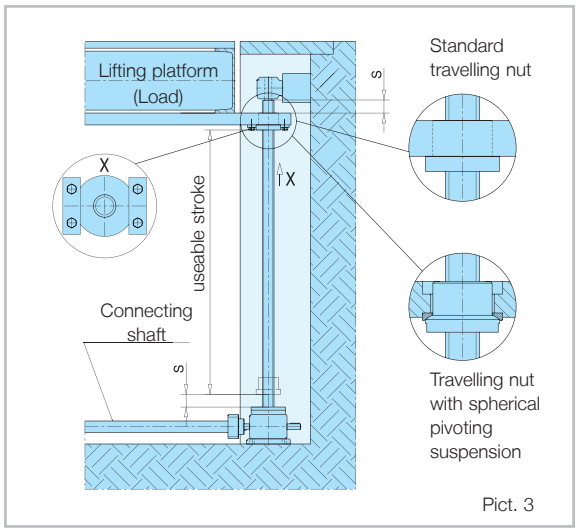

Arrangement with compression-loaded screw, possible with or without additional guides

Dimensioning of screw according to Euler's case III and critical screw speed

Design: Configuration type 2
With rotating screw and travelling nut

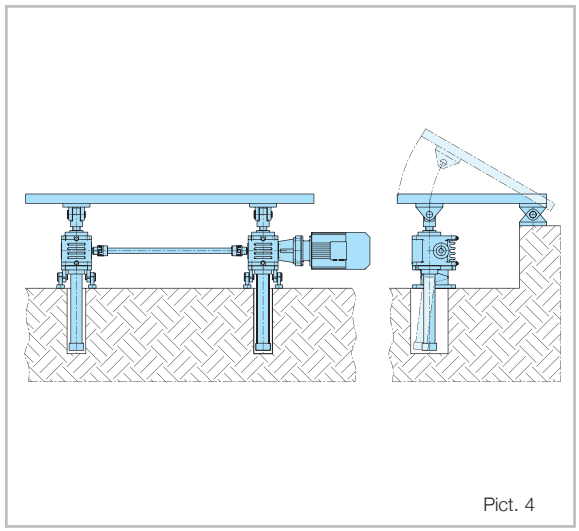

Swivelling movements require articulated mounting

Dimensioning of screw according to Euler's case II

Design: Configuration type 1
With lifting screw, two guide rings and protection tube

S = safety clearance
See chapter 7 "Accessories" for details of all required add-on items (connecting flanges, swivel mounting bases etc.).

2.10 Dimensioning of lifting systems

2.10.1 Flow diagram

Overall force [F_{ges}] of the system [kN]
Lifting speed
Select schematic drive-system layout (chapter 2.11)
Number and arrangement of screw jacks, type of motor, connecting shafts, bevel gear boxes, couplings

⇩

$$P_{Anl} = \frac{Fges^* v}{60^* \eta_{HE}{}^* \eta_{Anl}}$$

$$T_{Anl} = \frac{P_{Anl}{}^* 9550}{n_1}$$

$\eta_{Anl} \sim 0{,}8$
η_{HE} as shown in chapter 3.4.1 or 3.4.5

⇩

$$P_{HE} = \frac{P_{Anl}{}^* 1{,}3}{\text{Number of screw jacks}}$$

Check screw jack as show in capter 2.9

*Factor for unequal load distribution = 1,3
Observe the maximum drive torque on drive shaft of screw jack

⇩

Determine type of motor according to P_{Anl}, turning speed, with/without brake, torque T_A

If non-self-locking lifting systems are in operation, fit the motor with a spring-actuated safety brake.

⇩

Configure bevel gear boxes, couplings, connecting shafts (according to torque and turning speed)

T_{Anl} = minimum nominal torque of motor
starting torque
$T_A \sim T_{Anl}{}^* 1{,}3$

2.10.2 Example

Technical specifications:
F_{ges} = 60 kN (dyn. and stat.)
v = 1,9 m/min
ED = 20 %/h
Schematic view 4.1
Three-phase motor
Bevel gear box i = 1:1

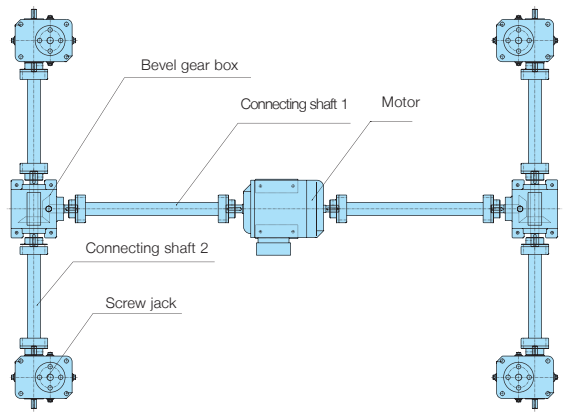

F_{HE} = 60 kN/4*1.3 F_{HE} = 19,5 kN	Pre-selection of screw jack according to chapter 2.8	⇨ HSE 63.1, Tr50x9, η_{HE} = 0,311; P_{HE} = 2,0 kW, $\eta_{Anl} \sim 0{,}8$
P_{Anl} = 7,63 kW	⇨ motor selection 7,5 kW, n_1 = 1500 min^{-1}	⇨ motor 132 M/4
T_{Anl} = 49 Nm	⇨ T_{Keg} = 25 Nm, i = 1:1 (chapter 4)	⇨ bevel gear box K 11.13
	T_{GW1} = 25 Nm, n_1 = 1500 min^{-1}; observe max. length according to n_{krit} (chapter 6)	⇨ connecting shaft ZR 28/38
	T_{GW2} = 12,5 Nm, n_1 = 1500 min^{-1}; observe max. length according to n_{krit} (chapter 6)	⇨ connecting shaft ZR 24/28

2.11 Schematic drive system layout

Symboles

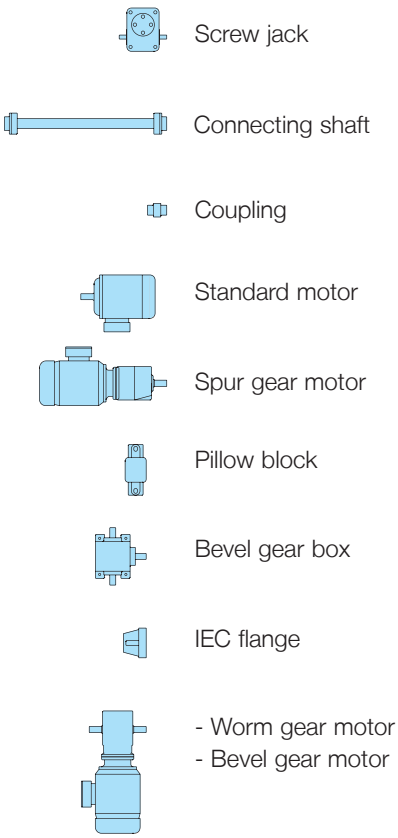

Pfaff-silberblau worm gear screw jacks and quick-lifting screw jacks can be used as either single drive units (see chapter 2.11.1) or multi-screw lifting systems (see chapter 2.11.2). Multi-screw lifting systems with mechanical synchronization are driven by a single motor, which makes them impervious to unequal load distribution and its negative effects on the synchronization of the screw jacks. Multi-screw lifting systems with electrical synchronization are distinguished by their low requirements in terms of mechanical connecting elements (and therefore lack of running noise), but they do require more sophisticated controls. Precise configuration of the drive motors, in conjunction with a master-slave layout, produces the corresponding exact synchronization of the drive systems.
Once you have decided on the best layout for your needs, you can establish which bevel gear boxes, couplings and connecting shafts are to be fitted. The fitting of pillow blocks can multiply the speed-dependent length of the connecting shafts.

Note:
If quick-lifting screw jacks are in use, correct configuration can eliminate the need for bevel gear boxes.

2.11.1 Single drive unit

Worm gear screw jack – coupling – motor in configuration B3 (base-mounted)

Schematic view 1.1

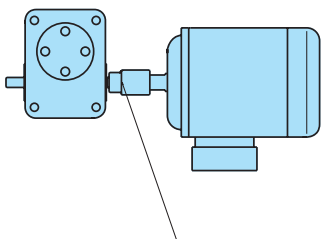

with coupling

Worm gear screw jack – coupling – IEC flange in configuration B14 or B5 (IEC flange-mounting)

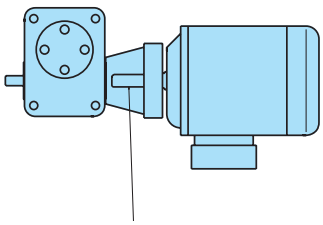

with IEC flange and coupling

2.11 Schematic drive system layout

2.11.2 Multi-screw lifting system

2.11.2.1 Mechanically synchronized

Schematic view 2.1

Schematic view 2.2

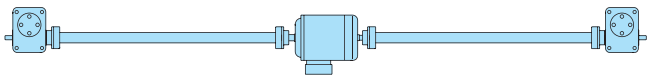

Schematic view 2.3

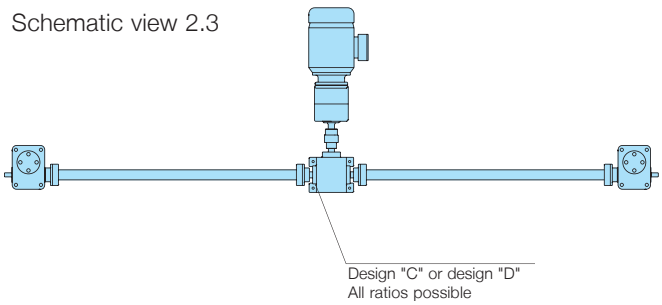

Schematic view 2.4

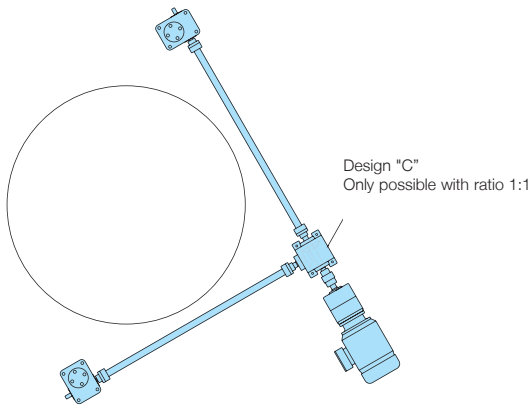

Schematic view 3.1

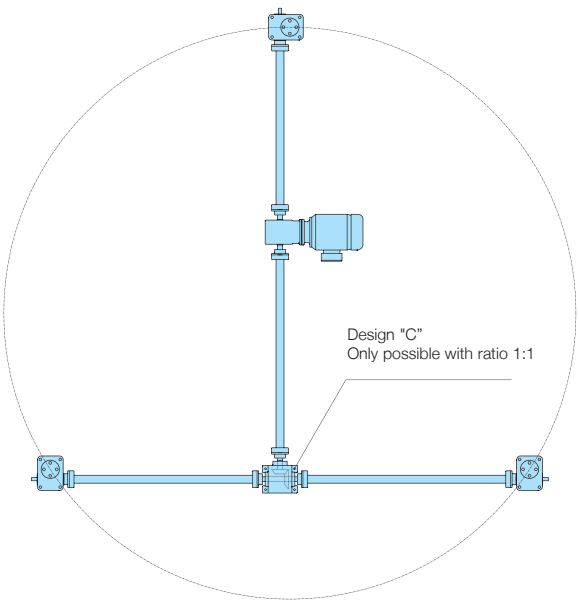

Schematic view 3.2

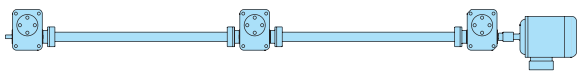

Schematic view 3.3

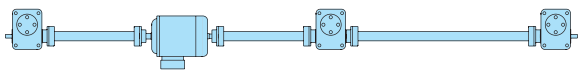

2.11 Schematic drive system layout

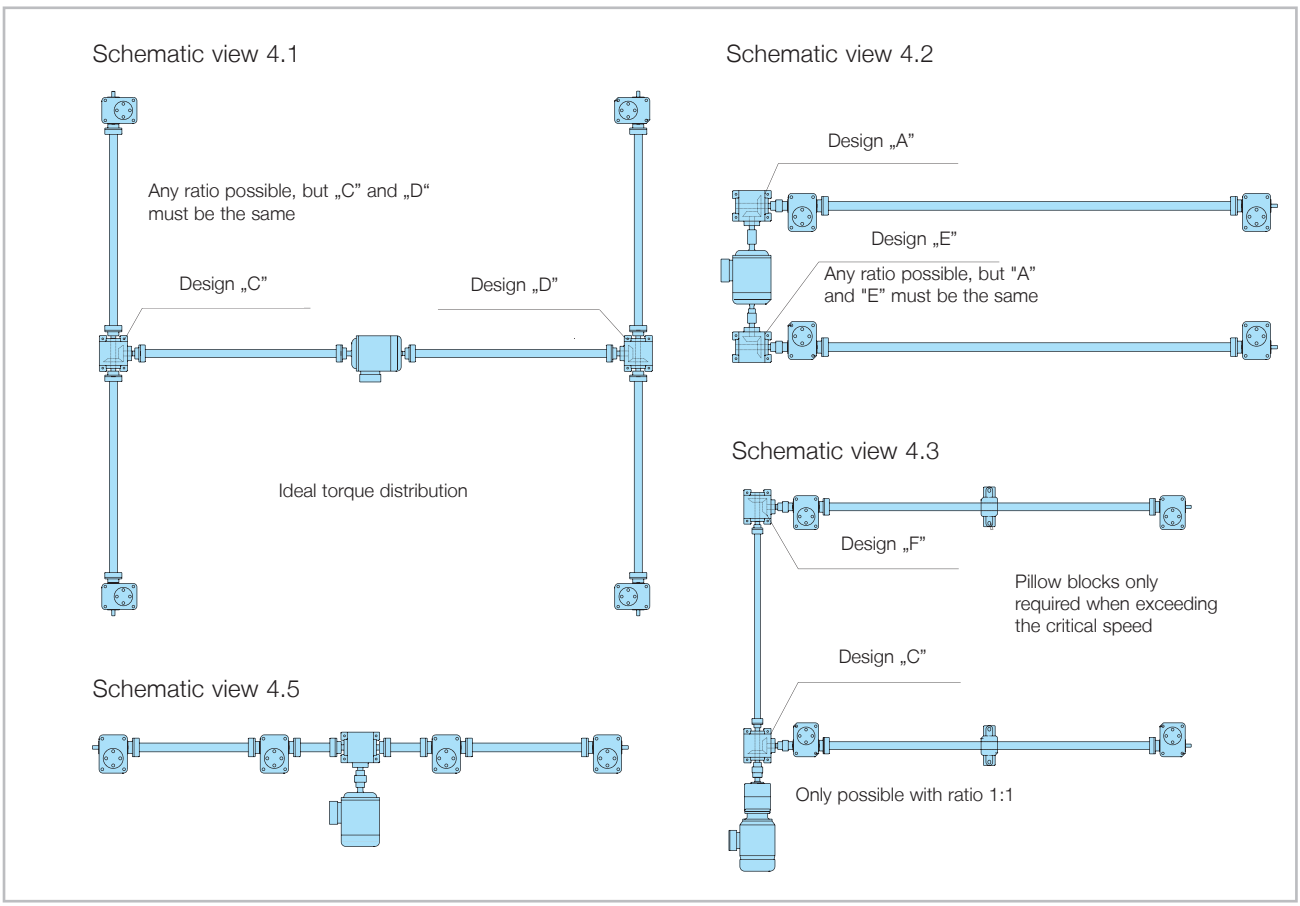

2.11.2.2 Electrically synchronized

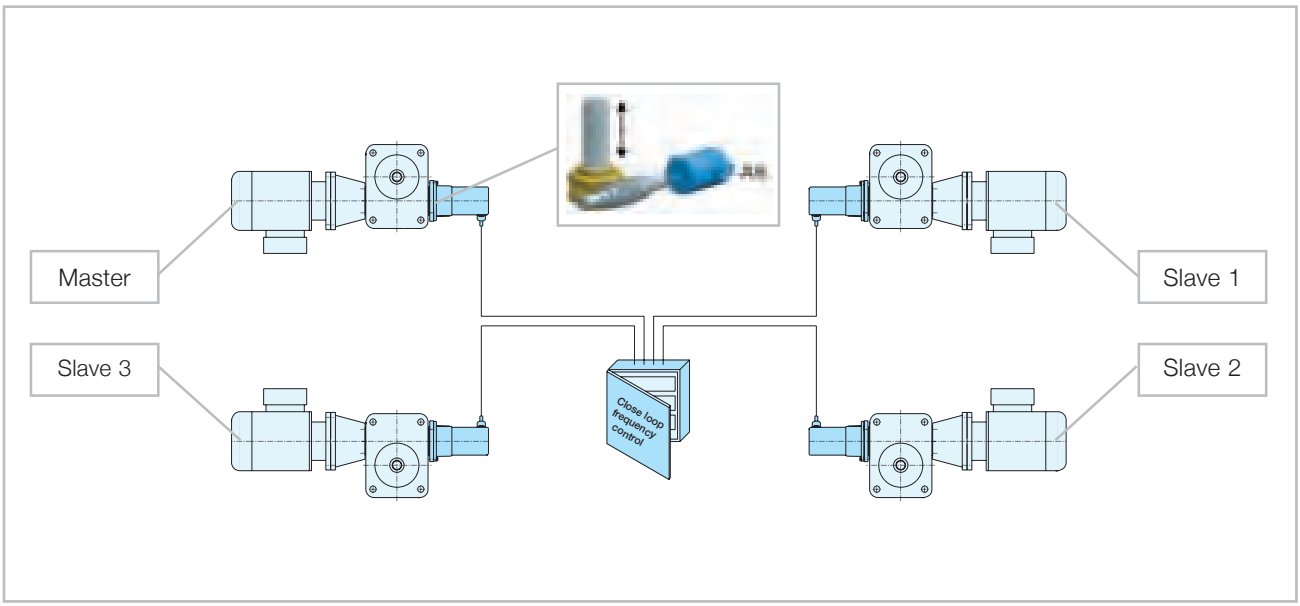

3.1 Construction support

The wide range of possible applications for our drive systems reveal their great versatility – which is increased even further through our customized solutions. Whatever operating task needs performing, whatever function you require – we can supply the right standard, modified or special solution, successfully combining off-the-peg elements with totally task-specific answers to your specifications. Just contact your technical specialist and draw up a draft solution for your particular task at hand.

3.1.1 Specifications/Solution system

In order to help you finding the correct specification we are indicating below both the task specification and the corresponding solution.

Your task specification
- Screw jack requirements
- Special configuration factors and features

Our solution
- Suggested solutions and recommendations

3.1.2 Construction

Your task specification	Symbol	Our solution
• No on site guidance possible • Lateral forces cannot be ruled out • Restoring forces produced by swivelling motion	❶ ❷ 	❶ **2nd guide ring** increases stability and prevents non-permitted edge compression on the nut thread ❷ **Articulated head** joint screw mounting
		**Movable travelling nut mounting** Use trunnion or spherical nut support **Note:** **Lateral forces should be avoided, as they drastically reduce the service life of the supporting nut**
• Worm gear screw jack as single drive unit without on site guidance • No on site anti-turn device available • With/Without lift limitation	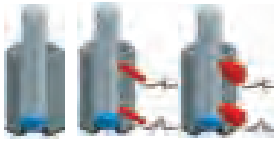	**Anti-turn device** Standard system using square tube or special configuration with feather key (for low lifting forces)
• Mechanical run-out prevention system required • With/Without lift limitation	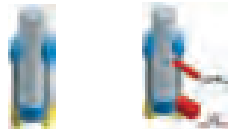	**Mechanical lift limitation, configuration type 1** Screw end with mechanical end stop for emergency limiting. Protection tube with fitted limit switches
• Swivelling/Tipping movements provided by worm gear screw jacks • With/Without lift limitation		**Swivel-lug configuration** Secure drive elements at two points using moveable mountings. This can be done using head IV on both screw ends or articulated head. The bending moments resulting from the swivelling motion should be minimized as much as possible by means of low-friction joints.

Screw jacks

Your task specification	Symbol	Our solution
• Requirement for constant axial play in trapezoidal screw thread	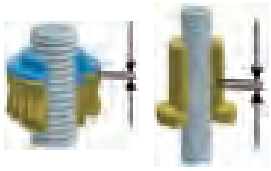	**Configuration with adjustable play** Special configuration with pre-stressed double nuts, axial play can be readjusted via housing cover. Special configuration with pre-stressed double travelling nuts. Axial play can be readjusted. **Note: Only applies to load reversal (tensile and compression load).** **No readjustment is required if ball screws are used.**
• Requirement for increased operating safety • Limitation of material damage in event of nut breaking	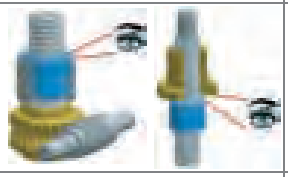	**Short safety nut** • Supporting nut with short safety nut • Visual wear monitoring **Note: Monitoring is only possible in one load direction.**
• Requirement for personal safety measures and/or conformity to VBG 14 accident prevention standards (persons under raised load/working platforms) • Or configuration conforming to BGV C1 (VBG 70) standards for stages and broadcasting studios	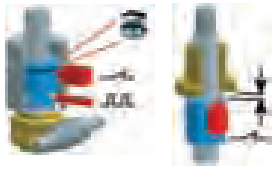	**Long safety nut** In the case of worm gear screw jacks used on theatre stages BGV C1 (VBG 70), lifting platforms (VBG 14) or lifting systems that might affect personal safety, screw jacks are designed according to current regulations, and include such items as anti-drop systems (self-locking screws and/or mechanical safety brakes as part of the drive system). The function of the synchronizing device is guaranteed, if required, by additional components.
• Large lifting capacity with small installation space		**Telescopic configuration** Right-/left-handed screw system requires – with large stroke – only half the length of protection tube (stroke x 0,5 + approx. 30 mm)
• Large lifting lengths and unfavourable clamping with minimal lifting force	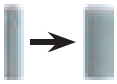	**Reinforced screw** for configuration type 2, possible under certain circumstances for configuration type 1
• No accidental lowering of load while unit is shutdown		**Single-start trapezoidal screw Tr** with self-locking system (e. g.: Tr 40x7)
• High lifting capacity for same screw diameter		**Buttress-thread screw S**
• High lifting speed required • Economical alternative to ball screw		**Multi-start trapezoidal screw Tr** • Efficiency rating (Tr > 50 %) (e. g.: 2-start screw Tr 40x14 P7) • **No self-locking system –> motor brake always required**
• Self-locking out of actuation • No motor brake desired	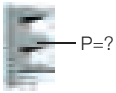	**Single-start trapezoidal screw with special lead** * No additional motor brake required (e. g.: Tr 40x5)
• High lifting speed required • Minimal axial play (≤ 0,03 mm) • High lead accuracy P300 ≤ 0,05 mm • Minimal friction required		**Ball screw Ku** or Pl planetary roller screw • Efficiency rating $\eta_{Ku} \approx 90$ % $\eta_{Pl} \approx 65$ % • **No self-locking system –> motor brake always required**

3.1 Construction support

Your task specification	Symbol	Our solution
• Positioning • Position measurement		**Shaft encoder installation** Available as option for all common makes Fitted directly to worm gear screw jack • Angle incremental encoder SSI absolute-value transmitter or DP Profibus
• Available installation space is limited	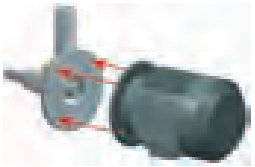	**Hollow shaft** Motor installation via hollow shaft and IEC flange
• Motor should be directly attached to screw jack		**Motor mounting flanges**
• Components are required to perform swivelling movements		**Swivel mounting bases** complete with bearing seats **Swivel plates**
• Active protection against dust, dirt or moisture required	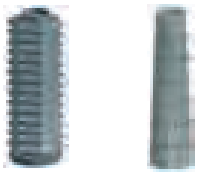	**Screw protection** Flexible protection boots Spiral spring cover
• Variable structural attachment methods desired	I II III IV  GK Option	**Spindle heads** Head I = plain head Head II = flange plate Head III = threaded head Head IV = rod-type head Head GK = fork-type head Option = articulated head
• Manual operation and/or manual emergency actuation required		**Hand wheel** Only advisable for emergency use or for small lifting movements. Conforming to DIN 950, compatible with the corresponding worm gear screw jack, supplied ready-drilled and keyed

3.2 Configuration type 1 - Configuration type 2

Type 1: Axial lifting screw; nut thread integrated into worm gear

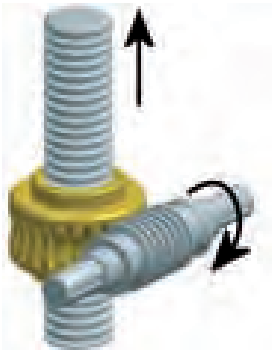

Worm gear screw jacks SHE/HSE/MERKUR

Drive is effected by the worm shaft acting on the worm wheel with nut thread. Lifting movement is effected by an anti-turn device (supplied with unit or added on site).

Type 1: Axial lifting screw; nut thread integrated into bevel gear

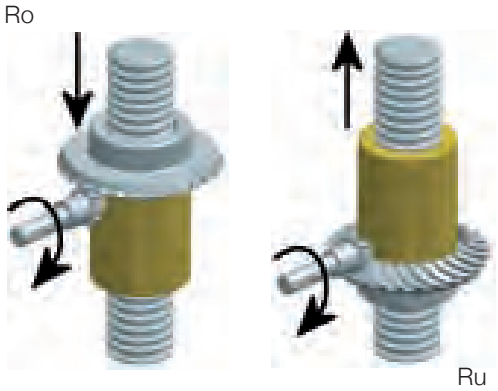

Quick-lifting screw jack SHG

Drive is provided by the driving pinion acting on the bevel gear with nut thread. Lifting movement is effected by an anti-turn device (supplied with unit or added on site). The alignment of the bevel gear (Ro or Ru) determines the direction of rotation.
(Ro = top wheel / Ru = bottom wheel)

Type 2: Rotating screw; nut thread in travelling nut outside the housing

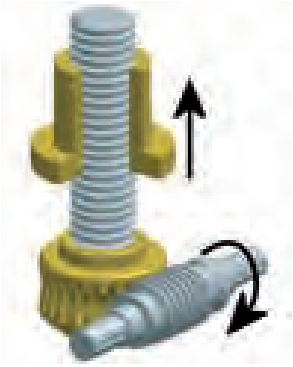

Worm gear screw jacks SHE/HSE/Merkur

Drive is effected by the worm shaft acting on the worm wheel. Rotating movement is effected by the positive engagement of the screw in the worm wheel. Lifting movement is effected by the travelling nut anti-turn device fitted on site.

Type 2: Rotating screw; nut thread in travelling nut outside the housing

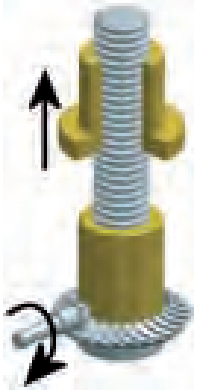

Quick-lifting screw jack SHG

Drive is effected by the driving pinion acting on the bevel gear. Rotating movement is effected by the positive engagement of the screw in the bevel gear. Lifting movement is effected by the travelling nut anti-turn device fitted on site. The alignment of the bevel gear (Ro = wheel upside / Ru = wheel downside) determines the direction of rotation (see type 1).

Note: standard configuration = right-handed screw; ↑ axial movement (direction) ↻ turning direction of drive shaft

3.3 Structural configurations

3.3.2 MERKUR range type 1

Type 1 (lifting screw) – cubical design; alternative to SHE

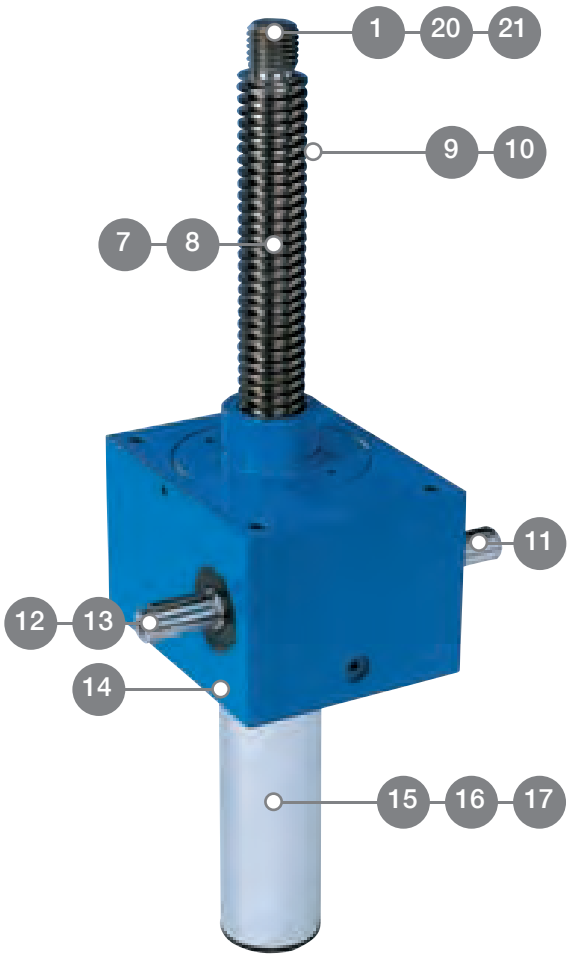

Dimension plans see chapter 3.6.1

Modular design:
9 different sizes
With lifting capacities ranging from 2.5 kN to 500 kN
Input speeds of up to 1500 rpm

- All-round configuration permits easy alignment
- Conforms to European manufacturers' standards for screw jacks in cubical design
- Self-locking trapezoidal screw
- Grease-lubricated configuration
- Worm gear pairs in two ratio steps (normal "N" and slow "L")

3.3 Structural configurations

No.	Symbol	SHE range type 1	MERKUR range type 1
1	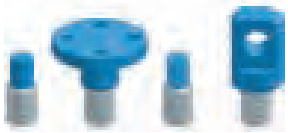	•	•
2		◦	
3	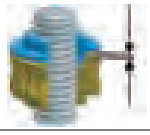	◦	
4		◦	◦
5		◦	◦
6		◦	
7		•	•
8	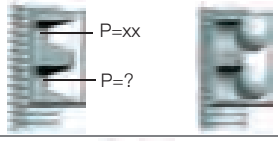	◦	◦
9		◦	
10	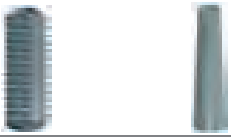	◦	◦
11		◦	◦

No.	Symbol	SHE range type 1	MERKUR range type 1
12		◦	◦
13		◦	◦
14		◦	◦
15		◦	◦
16		◦	•
17		◦	◦
18		◦	◦
19		◦	
20			•
21		◦	◦

• SHE and MERKUR of standard configuration
◦ Options and accessories

3.3 Structural configurations

3.3.4 MERKUR range type 2

Type 2 (rotating screw) - cubical design;
alternative to SHE

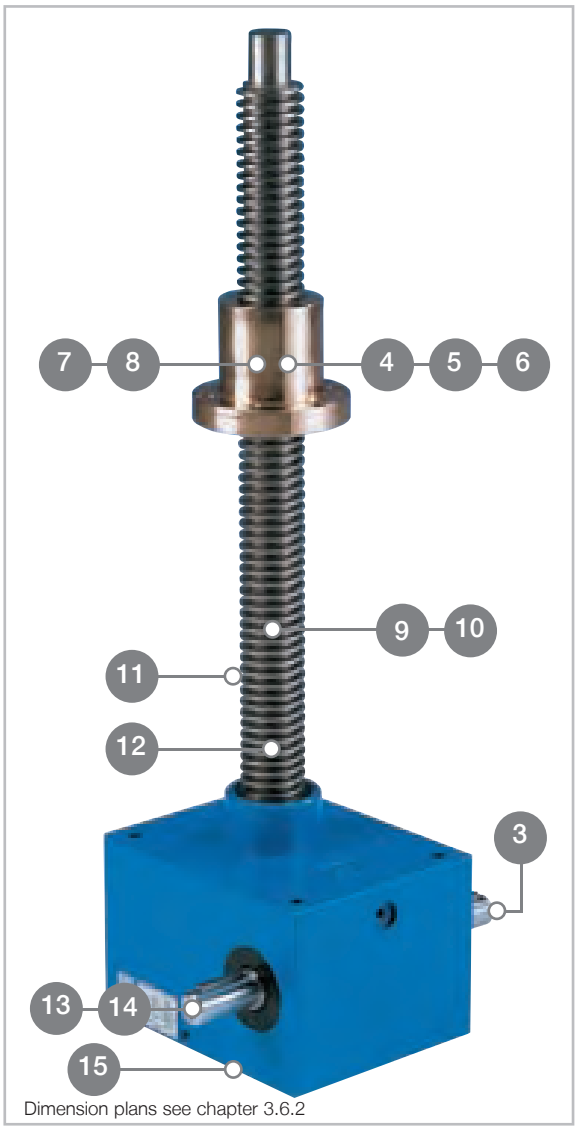

Dimension plans see chapter 3.6.2

Modular design:
9 different sizes
With lifting capacities ranging from 2.5 kN to 500 kN
Input speeds of up to 1500 rpm

- All-round configuration permits easy alignment
- Equivalent to European manufacturers' standards for screw jacks in cubical design
- Self-locking trapezoidal screw
- Grease-lubricated configuration
- Worm gear pairs in two ratio steps (normal "N" and slow "L")

3.3 Structural configurations

No.	Symbol	SHE range type 2	MERKUR range type 2
1		●	●
2		●	●
3		●	●
4		●	●
5		●	●
6		●	●
7		●	●
8	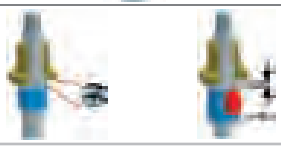	●	●

No.	Symbol	SHE range type 2	MERKUR range type 2
9		●	
10	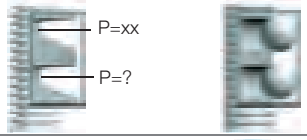	●	●
11		●	●
12	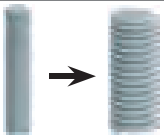	●	●
13		●	●
14		●	●
15		●	●
16		●	●

● SHE and MERKUR of standard configuration
● Options and accessories

3.4 Technical information

3.4.1.2 Worm gear screw jacks MERKUR

Size		M0	M1	M2	M3	M4
Max. lifting capacity	[kN]	2,5	5	10	25	50
Max. tensile load	[kN]	2,5	5	10	25	50
Screw Tr[1]		14x4	18x4	20x4	30x6	40x7
Ratio N		4:1	4:1	4:1	6:1	7:1
Lift per revolution for ratio N	[mm/per rev.]	1,0	1,0	1,0	1,0	1,0
Ratio L		16:1	16:1	16:1	24:1	28:1
Lift per revolution for ratio L	[mm/per rev.]	0,25	0,25	0,25	0,25	0,25
Max. drive capacity [2] at T = 20 °C Duty type S3 20% - 60 min	[kW]	0,12	0,2	0,3	0,5	0,9
Max. drive capacity [2] at T = 20 ° Duty type S3 10% - 60 min	[kW]	0,25	0,42	0,6	1,1	1,9
Overall efficiency of ratio N	[%]	34	30	28	27	25
Overall efficiency of ratio L	[%]	24	23	21	19	18
Screw efficiency rating	[%]	49	42,5	40	40	36,5
Torque, capacity, turning-speed at 20 % ED/h and 20 °C		see performance tables 3.4.3.2				
Screw torque at max. lifting power	[Nm]	3,2	7,5	16	60	153
Max. permitted drive-shaft torque	[Nm]	1,5	3,4	7,1	18	38
Max. permitted screw length for compression load	[mm]	see buckling diagrams 3.4.2				
Housing material		Al-Leg			GG	
Weight without stroke length and protection tube	[kg]	0,6	1,2	2,1	6	17
Screw weight per 100 mm stroke	[kg]	0,1	0,35	0,45	0,7	1,2
Amount of lubricant in worm gear	[kg]	0,03	0,08	0,14	0,24	0,8
Mass moment of inertia J[3] Ratio N type 1	[kg cm^2]	0,070	0,122	0,160	0,780	1,917
Mass moment of inertia J[3] Ratio N type 2	[kg cm^2]	0,069	0,126	0,165	0,794	1,952
Mass moment of inertia J[3] Ratio L type 1	[kg cm^2]	0,045	0,088	0,115	0,558	1,371
Mass moment of inertia J[3] Ratio L type 2	[kg cm^2]	0,050	0,091	0,119	0,552	1,381

Dimension plans type 1 - chapter 3.6.1/type 2 - chapter 3.6.2

[1] Also applies to Ku screw, see chapter 3.4.7

[2] Max. permitted values for type 1 and Tr screw. **Higher values are possible when using type 2 or Ku screw.**

[3] Referring to 100 mm screw length

3.4 Technical information

3.4.2 Permitted buckling force

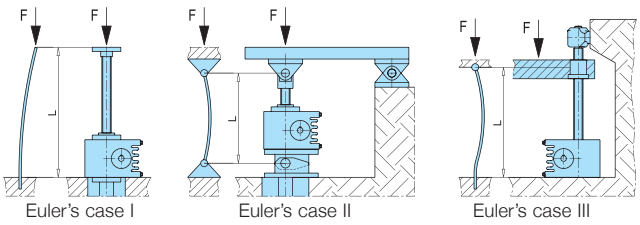

The various installation factors are ordered by Euler value

Screw dimensioning of the screw jacks for compression force

The permitted buckling force for trapezoidal and ball screws can be verified using the following buckling diagrams.

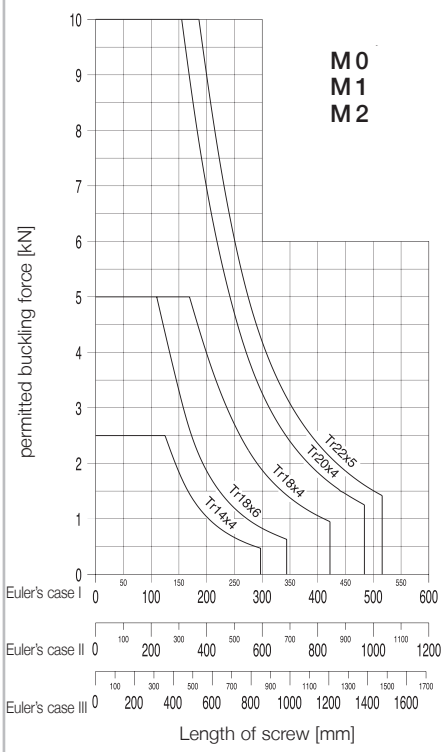

Buckling diagrams:

Tr14x4 Tr18x6
Tr18x4 Tr20x4
Tr22x5

Security for:

Compression range S = 4
Tetmajer S = 4...5 increasing

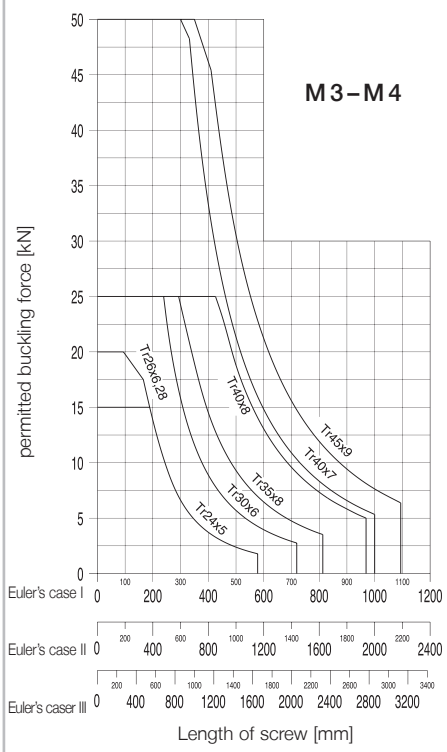

Buckling diagrams:

Tr24x5 Tr26x6,28
Tr30x6 Tr35x8
Tr40x7 Tr40x8
Tr45x8

Security for:

Compression range S = 4
Tetmajer S = 4...6 increasing
Euler's range S = 5

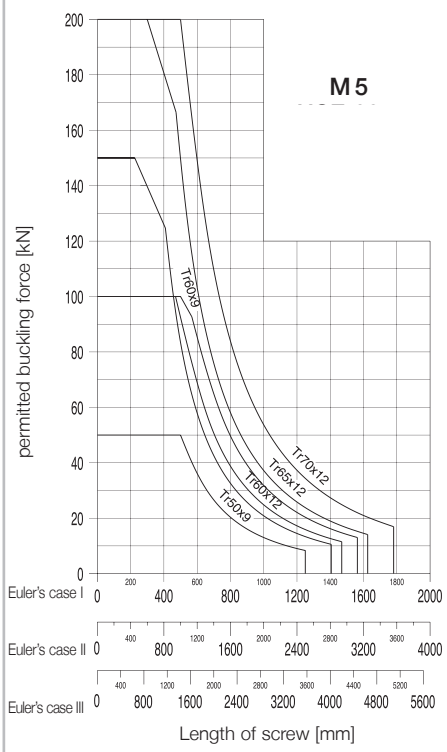

Buckling diagrams:

Tr50x9 Tr60x12
Tr60x9 Tr70x12
Tr65x12

Security for:

Compression range S = 4
Tetmajer S = 4...6 increasing
Euler's range S = 5

3.4 Technical information

3.4.3.2 MERKUR range (Standard worm gear screw jack)

Rotary speed, power requirement and permitted lifting speed for ratio N and L with single-start, **lifting (type 1) trapezoidal screw.** All performance data is expressed in terms of dynamic lifting capacity. With duty ration of < 10 %/h or configuration with rotating screw (type 2), the maximum permitted drive capacities can be increased. In this case, please consult our screw jack specialists.

M 0 screw Tr 14x4

n	Lifting speed		F=2,5 [kN]				F=2 [kN]				F=1,5 [kN]				F=1 [kN]				F=0,75 [kN]				F=0,5 [kN]				F=0,25 [kN]			
[1/min]	[m/min.]		N		L		N		L		N		L		N		L		N		L		N		L		N		L	
	N	L	Nm	kW	Nm	kW	Nm	kW	Nm	kW	Nm	kW	Nm	kW	Nm	kW	Nm	kW	Nm	kW	Nm	kW	Nm	kW	Nm	kW	Nm	kW	Nm	kW
1500	1,50	0,375	1,2	0,18	0,4	0,1	0,9	0,15	0,3	0,1	0,7	0,1	0,2	0,1	0,5	0,1	0,2	0,1	0,4	0,1	0,1	0,1	0,2	0,1	0,1	0,1	0,1	0,1	0,0	0,1
1000	1,00	0,250	1,2	0,12	0,4	0,1	0,9	0,10	0,3	0,1	0,7	0,1	0,2	0,1	0,5	0,1	0,2	0,1	0,4	0,1	0,1	0,1	0,2	0,1	0,1	0,1	0,1	0,1	0,0	0,1
750	0,75	0,188	1,2	0,10	0,4	0,1	0,9	0,1	0,3	0,1	0,7	0,1	0,2	0,1	0,5	0,1	0,2	0,1	0,4	0,1	0,1	0,1	0,2	0,1	0,1	0,1	0,1	0,1	0,0	0,1
600	0,60	0,150	1,2	0,1	0,4	0,1	0,9	0,1	0,3	0,1	0,7	0,1	0,2	0,1	0,5	0,1	0,2	0,1	0,4	0,1	0,1	0,1	0,2	0,1	0,1	0,1	0,1	0,1	0,0	0,1
500	0,50	0,125	1,2	0,1	0,4	0,1	0,9	0,1	0,3	0,1	0,7	0,1	0,2	0,1	0,5	0,1	0,2	0,1	0,4	0,1	0,1	0,1	0,2	0,1	0,1	0,1	0,1	0,1	0,0	0,1
300	0,30	0,075	1,2	0,1	0,4	0,1	0,9	0,1	0,3	0,1	0,7	0,1	0,2	0,1	0,5	0,1	0,2	0,1	0,4	0,1	0,1	0,1	0,2	0,1	0,1	0,1	0,1	0,1	0,0	0,1
100	0,10	0,025	1,2	0,1	0,4	0,1	0,9	0,1	0,3	0,1	0,7	0,1	0,2	0,1	0,5	0,1	0,2	0,1	0,4	0,1	0,1	0,1	0,2	0,1	0,1	0,1	0,1	0,1	0,0	0,1
50	0,05	0,013	1,2	0,1	0,4	0,1	0,9	0,1	0,3	0,1	0,7	0,1	0,2	0,1	0,5	0,1	0,2	0,1	0,4	0,1	0,1	0,1	0,2	0,1	0,1	0,1	0,1	0,1	0,0	0,1

M 1 screw Tr 18x4

n	Lifting speed		F=5 [kN]				F=4 [kN]				F=3 [kN]				F=2,5 [kN]				F=2 [kN]				F=1,5 [kN]				F=1 [kN]			
[1/min]	[m/min.]		N		L		N		L		N		L		N		L		N		L		N		L		N		L	
	N	L	Nm	kW	Nm	kW	Nm	kW	Nm	kW	Nm	kW	Nm	kW	Nm	kW	Nm	kW	Nm	kW	Nm	kW	Nm	kW	Nm	kW	Nm	kW	Nm	kW
1500	1,50	0,375	2,7	0,42	0,9	0,1	2,1	0,33	0,7	0,1	1,6	0,25	0,5	0,1	1,3	0,21	0,4	0,1	1,1	0,20	0,3	0,1	0,8	0,1	0,3	0,1	0,5	0,1	0,2	0,1
1000	1,00	0,250	2,7	0,28	0,9	0,1	2,1	0,22	0,7	0,1	1,6	0,17	0,5	0,1	1,3	0,14	0,4	0,1	1,1	0,10	0,3	0,1	0,8	0,1	0,3	0,1	0,5	0,1	0,2	0,1
750	0,75	0,188	2,7	0,21	0,9	0,1	2,1	0,17	0,7	0,1	1,6	0,13	0,5	0,1	1,3	0,10	0,4	0,1	1,1	0,1	0,3	0,1	0,8	0,1	0,3	0,1	0,5	0,1	0,2	0,1
600	0,60	0,150	2,7	0,17	0,9	0,1	2,1	0,13	0,7	0,1	1,6	0,10	0,5	0,1	1,3	0,1	0,4	0,1	1,1	0,1	0,3	0,1	0,8	0,1	0,3	0,1	0,5	0,1	0,2	0,1
500	0,50	0,125	2,7	0,14	0,9	0,1	2,1	0,1	0,7	0,1	1,6	0,1	0,5	0,1	1,3	0,1	0,4	0,1	1,1	0,1	0,3	0,1	0,8	0,1	0,3	0,1	0,5	0,1	0,2	0,1
300	0,30	0,075	2,7	0,1	0,9	0,1	2,1	0,1	0,7	0,1	1,6	0,1	0,5	0,1	1,3	0,1	0,4	0,1	1,1	0,1	0,3	0,1	0,8	0,1	0,3	0,1	0,5	0,1	0,2	0,1
100	0,10	0,025	2,7	0,1	0,9	0,1	2,1	0,1	0,7	0,1	1,6	0,1	0,5	0,1	1,3	0,1	0,4	0,1	1,1	0,1	0,3	0,1	0,8	0,1	0,3	0,1	0,5	0,1	0,2	0,1
50	0,05	0,013	2,7	0,1	0,9	0,1	2,1	0,1	0,7	0,1	1,6	0,1	0,5	0,1	1,3	0,1	0,4	0,1	1,1	0,1	0,3	0,1	0,8	0,1	0,3	0,1	0,5	0,1	0,2	0,1

M 2 screw Tr 20x4

n	Lifting speed		F=10 [kN]				F=8 [kN]				F=6 [kN]				F=4 [kN]				F=3 [kN]				F=2 [kN]				F=1 [kN]			
[1/min]	[m/min.]		N		L		N		L		N		L		N		L		N		L		N		L		N		L	
	N	L	Nm	kW	Nm	kW	Nm	kW	Nm	kW	Nm	kW	Nm	kW	Nm	kW	Nm	kW	Nm	kW	Nm	kW	Nm	kW	Nm	kW	Nm	kW	Nm	kW
1500	1,50	0,375	5,7	0,89	1,9	0,30	4,5	0,71	1,5	0,24	3,4	0,54	1,1	0,18	2,3	0,36	0,8	0,1	1,7	0,27	0,6	0,1	1,1	0,20	0,4	0,1	0,6	0,1	0,2	0,1
1000	1,00	0,250	5,7	0,60	1,9	0,20	4,5	0,48	1,5	0,16	3,4	0,36	1,1	0,12	2,3	0,24	0,8	0,1	1,7	0,18	0,6	0,1	1,1	0,10	0,4	0,1	0,6	0,1	0,2	0,1
750	0,75	0,188	5,7	0,45	1,9	0,15	4,5	0,36	1,5	0,12	3,4	0,27	1,1	0,1	2,3	0,18	0,8	0,1	1,7	0,13	0,6	0,1	1,1	0,1	0,4	0,1	0,6	0,1	0,2	0,1
600	0,60	0,150	5,7	0,36	1,9	0,12	4,5	0,29	1,5	0,10	3,4	0,21	1,1	0,1	2,3	0,14	0,8	0,1	1,7	0,1	0,6	0,1	1,1	0,1	0,4	0,1	0,6	0,1	0,2	0,1
500	0,50	0,125	5,7	0,30	1,9	0,1	4,5	0,24	1,5	0,1	3,4	0,18	1,1	0,1	2,3	0,12	0,8	0,1	1,7	0,1	0,6	0,1	1,1	0,1	0,4	0,1	0,6	0,1	0,2	0,1
300	0,30	0,075	5,7	0,18	1,9	0,1	4,5	0,14	1,5	0,1	3,4	0,11	1,1	0,1	2,3	0,10	0,8	0,1	1,7	0,1	0,6	0,1	1,1	0,1	0,4	0,1	0,6	0,1	0,2	0,1
100	0,10	0,025	5,7	0,10	1,9	0,1	4,5	0,1	1,5	0,1	3,4	0,1	1,1	0,1	2,3	0,1	0,8	0,1	1,7	0,1	0,6	0,1	1,1	0,1	0,4	0,1	0,6	0,1	0,2	0,1
50	0,05	0,013	5,7	0,1	1,9	0,1	4,5	0,1	1,5	0,1	3,4	0,1	1,1	0,1	2,3	0,1	0,8	0,1	1,7	0,1	0,6	0,1	1,1	0,1	0,4	0,1	0,6	0,1	0,2	0,1

M 3 screw Tr 30x6

n	Lifting speed		F=25 [kN]				F=20 [kN]				F=15 [kN]				F=10 [kN]				F=5 [kN]				F=2,5 [kN]				F=1 [kN]			
[1/min]	[m/min.]		N		L		N		L		N		L		N		L		N		L		N		L		N		L	
	N	L	Nm	kW	Nm	kW	Nm	kW	Nm	kW	Nm	kW	Nm	kW	Nm	kW	Nm	kW	Nm	kW	Nm	kW	Nm	kW	Nm	kW	Nm	kW	Nm	kW
1500	1,50	0,375	14,7	2,31	5,2	0,82	11,8	1,85	4,2	0,66	8,8	1,39	3,1	0,49	5,9	0,93	2,1	0,33	2,9	0,46	1,0	0,2	1,5	0,2	0,5	0,1	0,6	0,1	0,2	0,1
1000	1,00	0,250	14,7	1,54	5,2	0,55	11,8	1,23	4,2	0,44	8,8	0,93	3,1	0,33	5,9	0,62	2,1	0,22	2,9	0,31	1,0	0,1	1,5	0,2	0,5	0,1	0,6	0,1	0,2	0,1
750	0,75	0,188	14,7	1,16	5,2	0,41	11,8	0,93	4,2	0,33	8,8	0,69	3,1	0,25	5,9	0,46	2,1	0,16	2,9	0,23	1,0	0,1	1,5	0,1	0,5	0,1	0,6	0,1	0,2	0,1
600	0,60	0,150	14,7	0,93	5,2	0,33	11,8	0,74	4,2	0,26	8,8	0,56	3,1	0,20	5,9	0,37	2,1	0,13	2,9	0,19	1,0	0,1	1,5	0,1	0,5	0,1	0,6	0,1	0,2	0,1
500	0,50	0,125	14,7	0,77	5,2	0,27	11,8	0,62	4,2	0,22	8,8	0,46	3,1	0,16	5,9	0,31	2,1	0,11	2,9	0,15	1,0	0,1	1,5	0,1	0,5	0,1	0,6	0,1	0,2	0,1
300	0,30	0,075	14,7	0,46	5,2	0,16	11,8	0,37	4,2	0,13	8,8	0,28	3,1	0,10	5,9	0,19	2,1	0,1	2,9	0,10	1,0	0,1	1,5	0,1	0,5	0,1	0,6	0,1	0,2	0,1
100	0,10	0,025	14,7	0,15	5,2	0,10	11,8	0,12	4,2	0,1	8,8	0,10	3,1	0,1	5,9	0,10	2,1	0,1	2,9	0,1	1,0	0,1	1,5	0,1	0,5	0,1	0,6	0,1	0,2	0,1
50	0,05	0,013	14,7	0,10	5,2	0,1	11,8	0,1	4,2	0,1	8,8	0,1	3,1	0,1	5,9	0,1	2,1	0,1	2,9	0,1	1,0	0,1	1,5	0,1	0,5	0,1	0,6	0,1	0,2	0,1

☐ Duty type S3 20% - 60 min ☐ static only (dynamic not permitted) ☐ Duty type S3 10% - 60 min

M4 screw 40x7

n	Lifting speed		F=50 [kN]				F=40 [kN]				F=30 [kN]				F=20 [kN]				F=10 [kN]				F=5 [kN]				F=2,5 [kN]			
[1/min]	[m/min.]		N		L		N		L		N		L		N		L		N		L		N		L		N		L	
	N	L	Nm	kW	Nm	kW	Nm	kW	Nm	kW	Nm	kW	Nm	kW	Nm	kW	Nm	kW	Nm	kW	Nm	kW	Nm	kW	Nm	kW	Nm	kW	Nm	kW
1500	1,50	0,375	31,8	5,0	11,1	1,7	25,5	4,0	8,8	1,4	19,1	3,0	6,6	1,0	12,7	2,0	4,4	0,7	6,4	1,0	2,2	0,3	3,2	0,5	1,1	0,2	1,6	0,3	0,6	0,1
1000	1,00	0,250	31,8	3,3	11,1	1,2	25,5	2,7	8,8	0,9	19,1	2,0	6,6	0,7	12,7	1,3	4,4	0,5	6,4	0,7	2,2	0,2	3,2	0,3	1,1	0,1	1,6	0,2	0,6	0,1
750	0,75	0,188	31,8	2,5	11,1	0,9	25,5	2,0	8,8	0,7	19,1	1,5	6,6	0,5	12,7	1,0	4,4	0,35	6,4	0,5	2,2	0,2	3,2	0,3	1,1	0,1	1,6	0,1	0,6	0,1
600	0,60	0,150	31,8	2,0	11,1	0,7	25,5	1,6	8,8	0,6	19,1	1,2	6,6	0,4	12,7	0,8	4,4	0,3	6,4	0,4	2,2	0,1	3,2	0,2	1,1	0,1	1,6	0,1	0,6	0,1
500	0,50	0,125	31,8	1,7	11,1	0,6	25,5	1,3	8,8	0,5	19,1	1,0	6,6	0,3	12,7	0,7	4,4	0,2	6,4	0,3	2,2	0,1	3,2	0,2	1,1	0,1	1,6	0,1	0,6	0,1
300	0,30	0,075	31,8	1,0	11,1	0,3	25,5	0,8	8,8	0,3	19,1	0,6	6,6	0,2	12,7	0,4	4,4	0,1	6,4	0,2	2,2	0,1	3,2	0,1	1,1	0,1	1,6	0,1	0,6	0,1
100	0,10	0,025	31,8	0,3	11,1	0,1	25,5	0,3	8,8	0,1	19,1	0,2	6,6	0,1	12,7	0,1	4,4	0,1	6,4	0,1	2,2	0,1	3,2	0,1	1,1	0,1	1,6	0,1	0,6	0,1
50	0,05	0,013	31,8	0,2	11,1	0,1	25,5	0,1	8,8	0,1	19,1	0,1	6,6	0,1	12,7	0,1	4,4	0,1	6,4	0,1	2,2	0,1	3,2	0,1	1,1	0,1	1,6	0,1	0,6	0,1

☐ Duty type S3 20% - 60 min ☐ static only (dynamic not permitted) ☐ Duty type S3 10% - 60 min

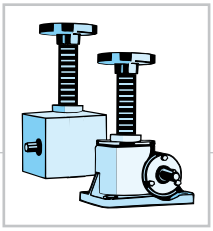

Worm gear screw jacks

Merkur range dimension plans

Type 1

Standard

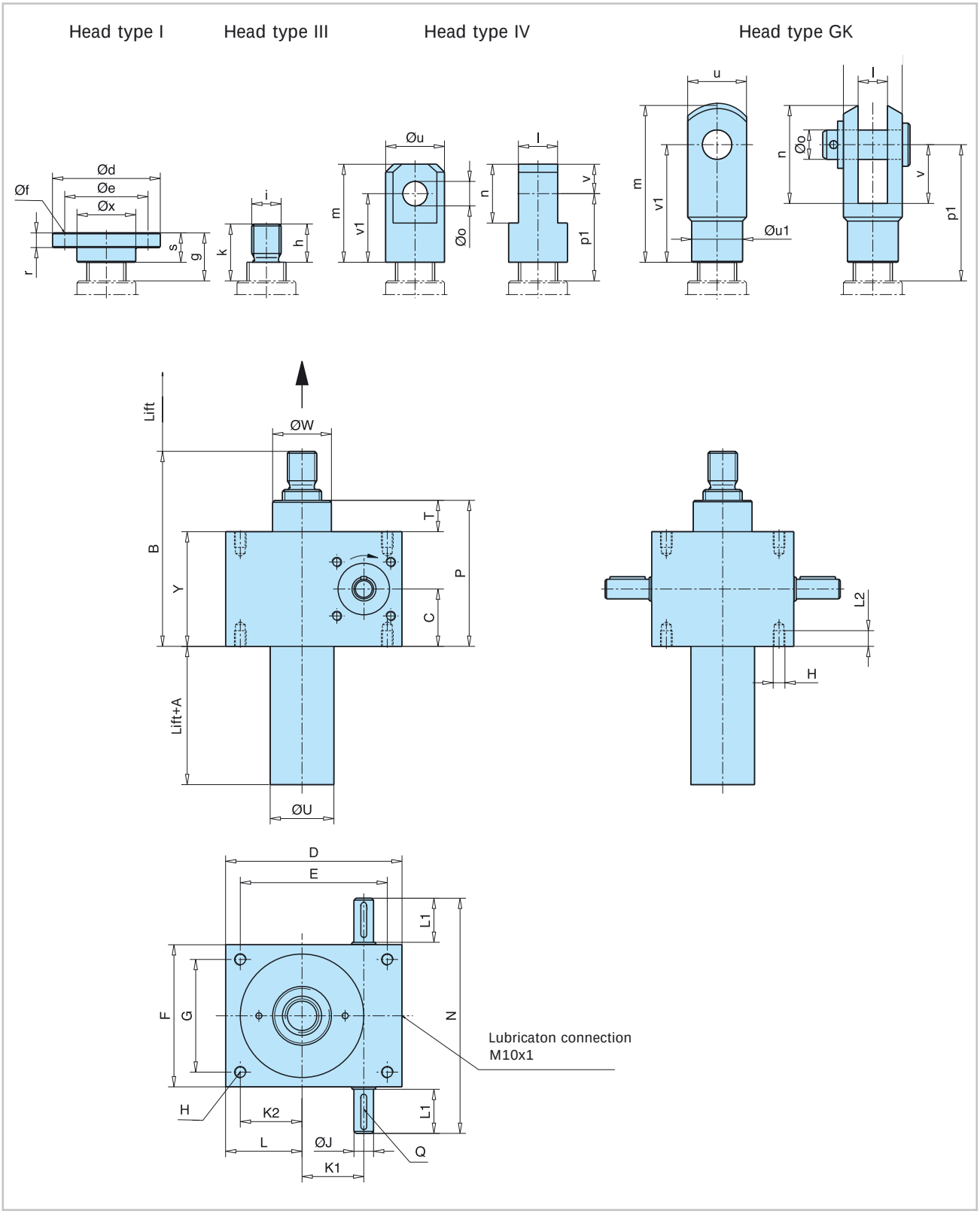

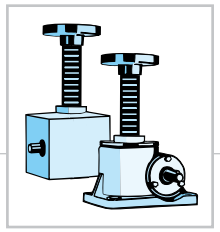

Type 1 Merkur range dimension plans

Size	M 0	M 1	M 2	M 3	M 4
Tr spindle	Tr 14x4	Tr 18x4	Tr 20x4	Tr 30x6	Tr 40x7
A	20	20	30	30	45
B	77	97 (110)	120 (124)	132	182
C	25	31	37,5	41	58,5
D	60	80	100	130	180
E	48	60	78	106	150
F	50	72	85	105	145
G	38	52	63	81	115
H	M6	M8	M8	M10	M12
ø J_{k6}	9	10	14	16	20
K 1	20	25	32	45	63
K 2	16	21	29	42	63
L	22	31	40	54	78
L 1	20	22,5	25,5	43	45
L 2	12	13	15	15	16
N	92	120	140	195	240
P	62	74 (87)	93 (97)	105	149
Q	3x3x14	3x3x18	5x5x20	5x5x36	6x6x36
T	12	12 (25)	18 (22)	23	32
ø U	28	32	40	50	65
ø W	26	30 (48)	38,7 (57)	46	60
Y	50	62	75	82	117
Head II					
ø d	50	65	80	90	110
ø e	40	48	60	67	85
ø f	4xØ7	4xØ9	4xØ11	4xØ11	4xØ13
g	19	24	28	28	34
s	16	20	21	23	30
r	6	7	8	10	15
ø x	26	30	40	46	60
Head III					
h	12	19	20	22	29
i	M8	M12	M14	M20	M30
k	15	23	27	27	33
Head IV					
l_{h10}	12	15	20	30	35
m	40	55	63	78	100
n	20	30	36	45	60
ø o^{H8}	8	10	12	16	20
p1	33	44	52	58	74
ø u	25	30	40	45	60
v	10	15	18	25	30
v1	30	40	45	53	70
Head GK					
l_{H10}	8	12	14	20	30
m	42	61	72	105	160
n	26	37	44	65	100
ø o^{H8}	8	12	14	20	30
p1	35	52	63,5	85	124
u	16	24	27	40	60
ø u1	14	20	24,5	34	52
v	16	24	28	40	60
v1	32	48	56	80	120

( ) values in brackets only for special configuration with Ku spindle

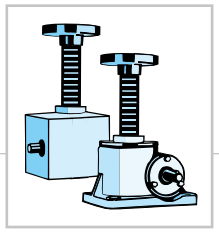

Worm gear screw jacks

Type 1 Merkur range dimension plans

2nd Guide ring 2FR

Standard with all sizes of the Merkur

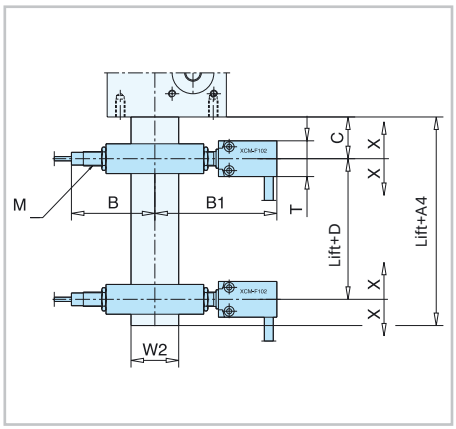

With added-on stroke-end limit switches

All sizes of unit can be supplied with mechanical or inductive operating limit switches

Size	A4	B	B1	C	D	T	M	W2
M 0	80	64	94	30	15	25	M12x1	28
M 1	80	66	96	30	15	25	M12x1	32
M 2	85	70	100	35	18	25	M12x1	40
M 3	100	75	105	39	20	25	M12x1	50
M 4	100	83	113	50	16	25	M12x1	65

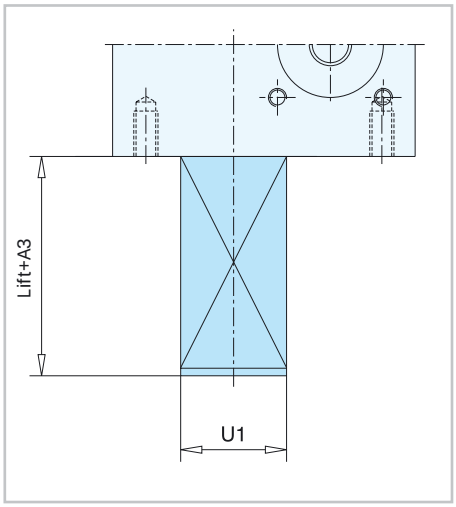

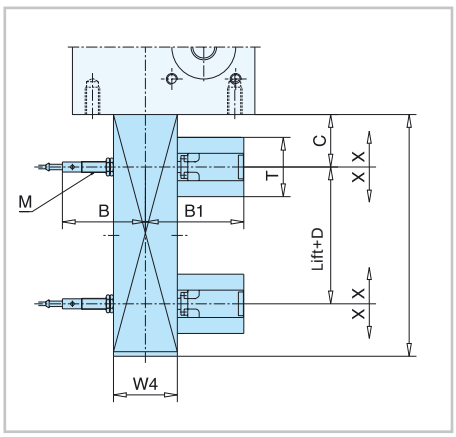

Anti-turn device Vm/Vi with added-on stroke limit switches

All sizes of unit can be supplied with mechanical or inductive operating limit switches.

Size	A4	B	B1	C	D	T	M	W4	X
M 1	80	66	96	30	15	25	12x1	35x35	±10
M 2	85	70	100	35	18	25	12x1	40x40	±10
M 3	100	75	105	39	20	25	12x1	50x50	±10
M 4	100	83	113	50	16	25	12x1	65x65	±10

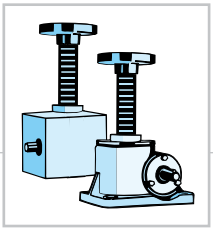

Worm gear screw jacks

Type 2 Merkur range dimension plans

Type 2

Standard

Head type I

Flanged travelling nut shown here, see pg 26 for stocked cylindrical nuts *

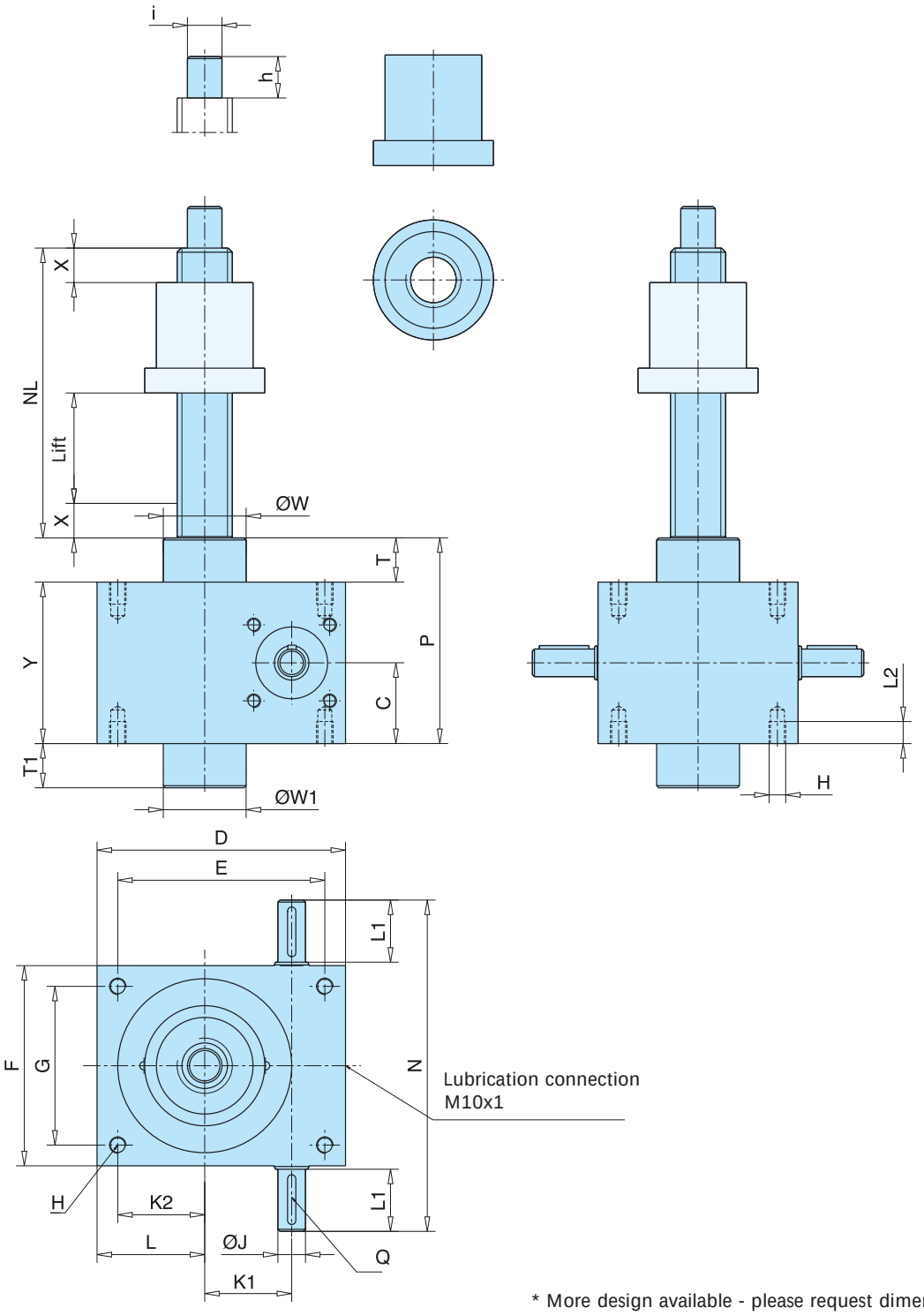

* More design available - please request dimensions

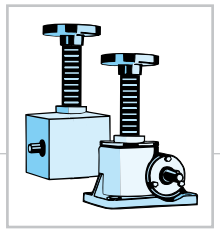

Type 2 Merkur range dimension plans

Size	M 0	M 1	M 2	M 3	M 4
Spindle	Tr 14x4	Tr 18x4	Tr 20x4	Tr 30x6	Tr 40x7
C	25	31	37,5	41	58,5
D	60	80	100	130	180
E	48	60	78	106	150
F	50	72	85	105	145
G	38	52	63	81	115
H	M 6	M 8	M 8	M 10	M 12
ø J_{k6}	9	10	14	16	20
K 1	20	25	32	45	63
K 2	16	21	29	42	63
L	22	31	40	54	78
L 1	20	22,5	25,5	43	45
L 2	12	13	15	15	16
N	92	120	140	195	240
NL	lift + 52	lift + 56	lift + 70	lift + 85	lift + 110
P	62	74	93	105	149
Q	3x3x14	3x3x18	5x5x20	5x5x36	6x6x36
T	12	12	18	23	32
T1[1)]	12	12	18	--	32
ø W	26	30	38,7	46	60
ø W1[1)]	26	30	38,7	--	60
Safety X	10	12	15	20	25
Y	50	62	75	82	117
Flanged Travelling nut (avai able on request)					
a	32	32	40	45	60
b	10	10	12	15	18
ø c_{h9}	40	40	45	50	70
ø d	50	50	65	80	87
Head I					
ø i_{k6}	8	12	15	20	25
h	12	15	20	25	30

[1)] Bearing neck can be dispensed with if required

Merkur Trapezoidal nut LRM

Cylindrical red brass nut LRM

Thread: DIN 103-7H
Suitable for: Merkur screw jacks.
Material: G-CuSn 7 ZnPb (2.1090)

The thread is the reference for precise installation.
The trapezoidal nut LRM has good emergency operation properties on steel screws if there is a lack of lubricant. They produce "saltwater-resistant" drives when coupled with stainless steel screws.

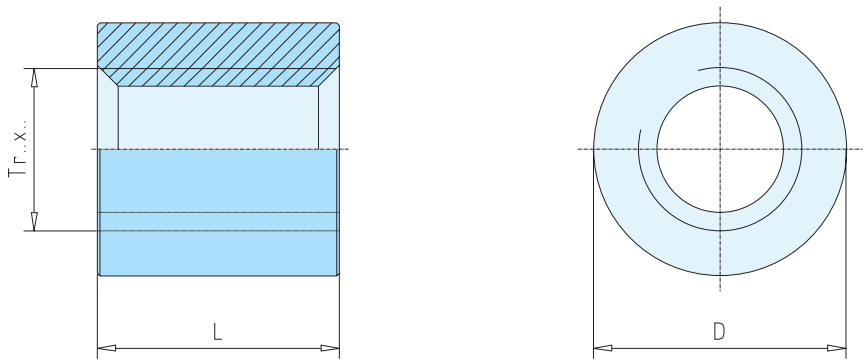

Size TGM-LRM-	Surface support proportion (mm^2)	Dimensions in mm D	L	Weight (kg)
Tr14x4-	370	30	28	0,135
Tr18x4-	630	40	36	0,320
Tr20x4-	790	45	40	0,455
Tr24x5-	1130	50	48	0,656
Tr24x10-	1130	50	48	0,656
Tr30x6-	1780	60	60	1,140
Tr40x7-	3210	80	80	2,725
Tr50x8-	5060	90	100	4,014
Tr60x9-	7320	100	120	~ 4,400
Tr70x10-	9800	110	140	~ 5,000

Flanges added as required by threading nut body OD and scotch keyed into place

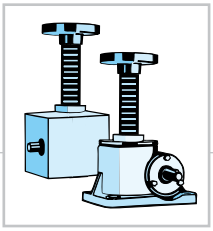

Worm gear screw jacks

Merkur range dimension plans

MERKUR – short safety nut

Take up the axial strain if the main nut breaks. This considerably increases the operating safety of the drive elements. The safety nut can also be used to carry out a precise check for wear on the main nut, as the clearance between these two nuts changes according to the amount of wear. In the case of worm gear screw jacks with short safety nut, the direction of main stress (tension and compression force) and the installation point should be taken into account, as only a correctly fitted safety nut is capable of taking up the load.

MERKUR type 2, compression and tension force

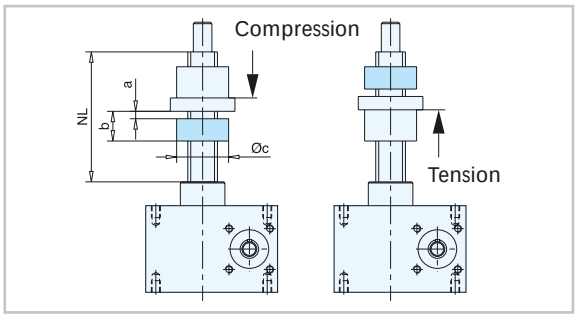

Size	NL	a[1)]	b	Øc
M 0	on request			
M 1				
M 2	lift+95	5	25	45
M 3	lift+120	10	35	50
M 4	lift+150	10	40	70

With long safety nut (GUV 16.4.5 or VBG 14)

In the case of worm gear screw jacks used on theatre stages (VBG 16.4.5), lifting platforms (VBG 14) or jacking systems that might affect personal safety, lifting elements are designed according to current regulations, and include such items as anti-drop systems (self-locking spindles and/or mechanical safety brakes as part of the drive system). The function of the synchronizing device is guaranteed, when required, by additional components.

MERKUR type 2, compression and tension force

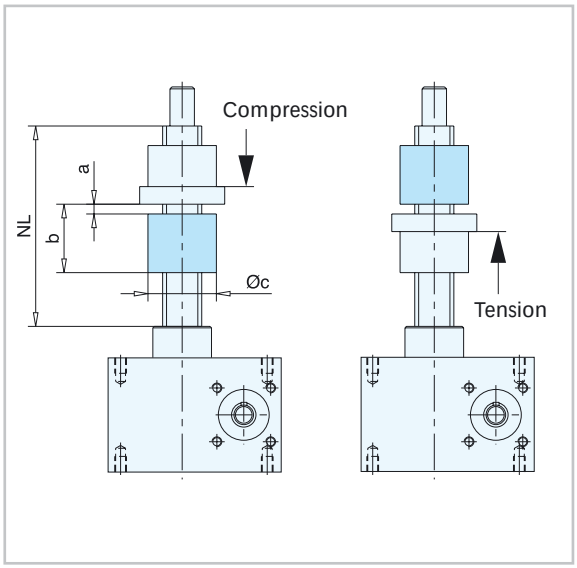

Size	NL	a[1)]	b	Øc
M 0	on request			
M 1				
M 2	lift+115	5	45	45
M 3	lift+140	10	55	50
M 4	lift+180	10	70	70

[1)] When new; repair of supporting and safety nut required at "setting a = 0"

See section 3.8 for details of further travelling nut configurations

- Travelling nut with trunnion
- Ku spindle with single flange nut
- Travelling nut with keyed surface
- Travelling nut with spherical support

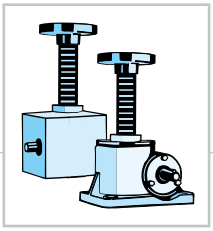

Worm gear screw jacks

Special travelling nuts dimension plans

LWZ Travelling nut with trunnion (not stocked, available on request)

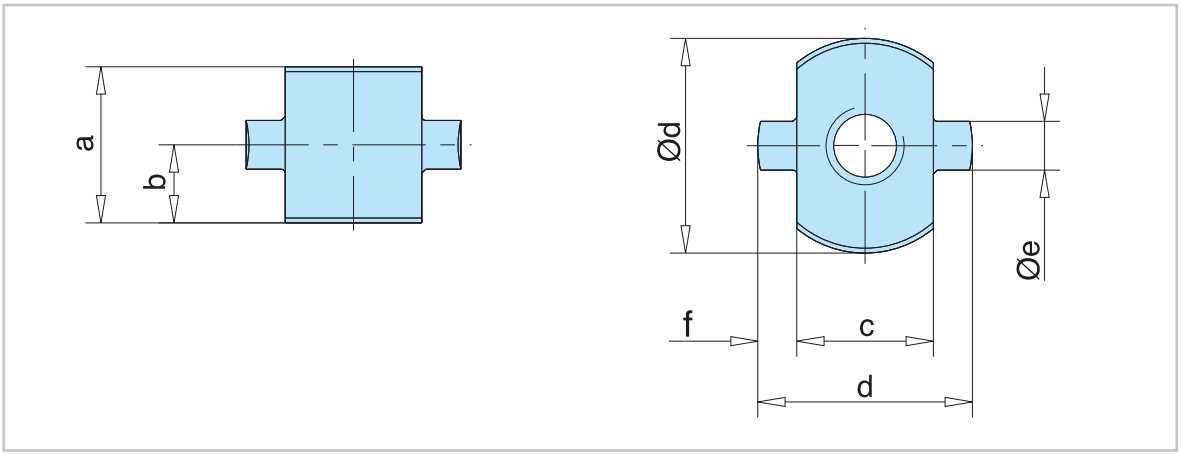

Merkur range

Size	a	b	c	Ød	Øe	f
M 1	45	22,5	35	50	14	7,5
M 2	50	25	40	60	18	10
M 3	60	30	50	80	25	15
M 4	70	35	62	95	35	16,5

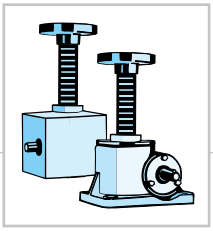

Worm gear screw jacks

Special travelling nuts dimension plans

LSF Travelling nut with flat surface (avail;able on request, not stocked)

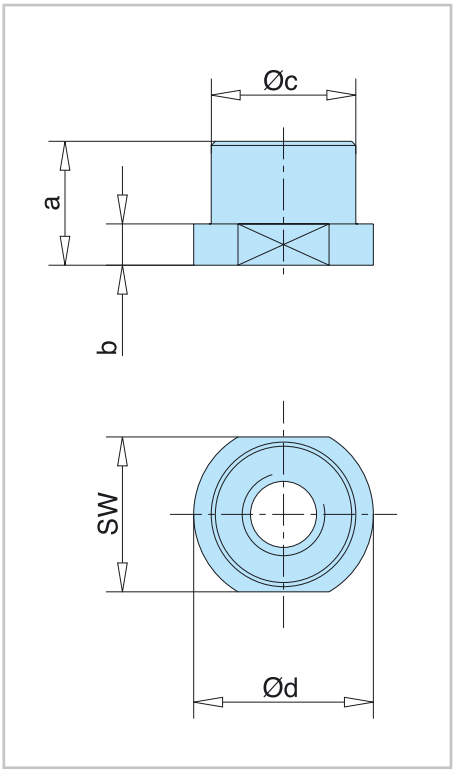

	Size	a	b	Øc	Ød	SW
0,5	M1	32	10	40	50	44
1	M2	40	12	45	65	50
2,5	M3	45	16	50	80	62
5	M4	60	18	70	87	75

LSA Travelling nut with spherical support (available on request, not stocked)

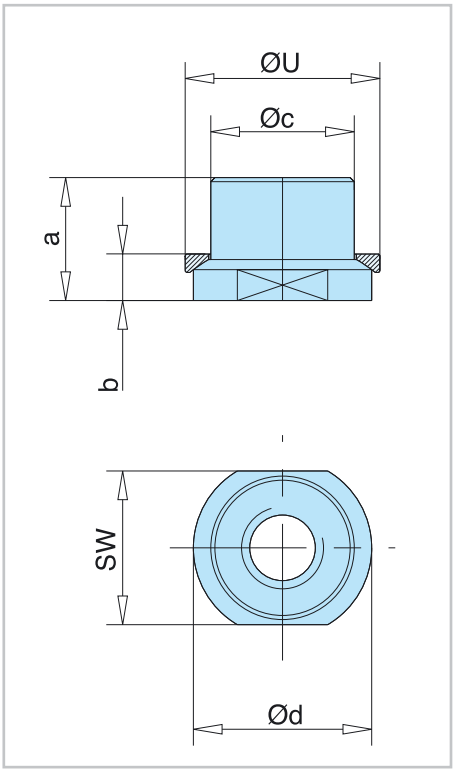

More designs available - please request their dimensions!

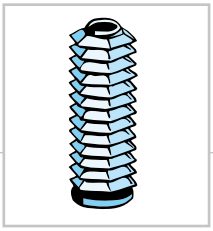

Lifting screw protective covers

Flexible protection boots (made to order)

Fig.1

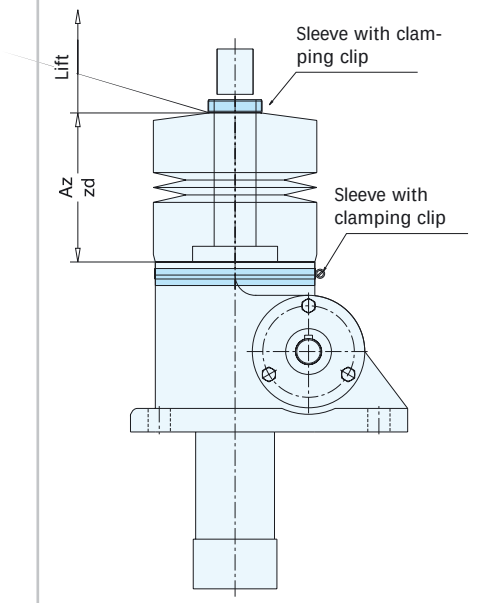

Pfaff-silberblau worm gear screw jacks must be protected with bellows if they are to be used in circumstances where there is a danger of dirt entering the unit or damage or injury occurring. Several types of bellows configuration, in different materials, are available according to requirements

General points

In the standard configuration, flexible protection boots made of material polynylon fabric sewn. They are secured at both ends with stainless steel hose clamps (Fig. 1).

If they are arranged in a tilted or horizontal position, the flexible protection boots must be fitted (from a stroke-length of 400mm onwards) with support rings in order to prevent them engaging with the threads.

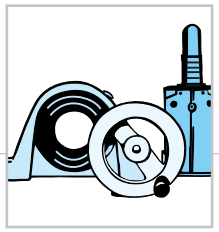

Swivel plates (made to order)

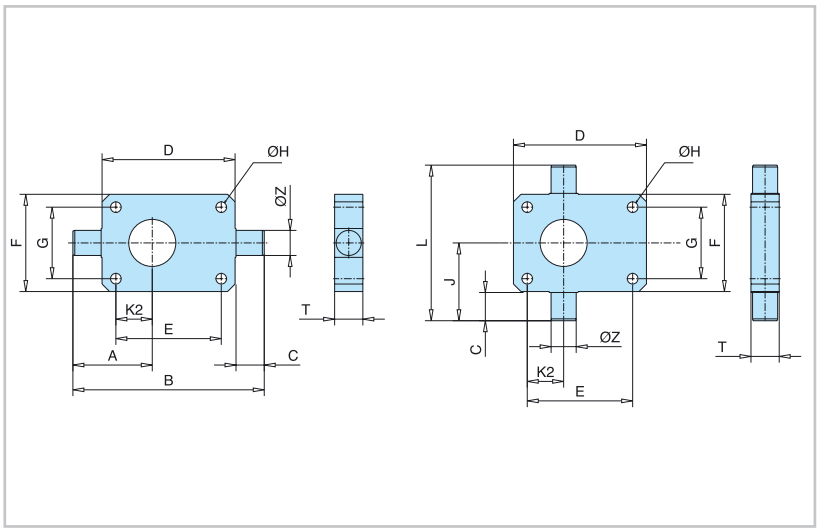

In order to allow worm gear screw jacks to carry out swiveling and tipping movements, the drive elements must be secured at two points and permitted to move. This can be done using swivel plates and a head (IV) or coupling head. The moment of flexion resulting from the swiveling motion should be minimized as much as possible by means of low-friction articulations.

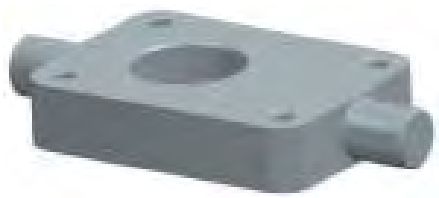

Merkur range

Size	A	B	C	D	E	F	G	ØH	K2	T	ØZ	L	J
0	32	80	10	60	48	50	38	6,6	16	15	10	70	35
1	46	110	15	80	60	72	52	9	21	20	15	102	51
2	60	140	20	100	78	85	63	9	29	25	20	125	62,5
3	74	170	20	130	106	105	81	11	42	30	25	145	72,5
4	108	240	30	180	150	145	115	13,5	63	40	35	205	102,5

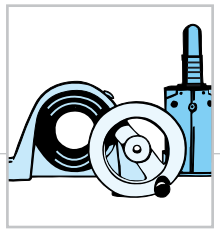

Swivel mounting bases (made to order)

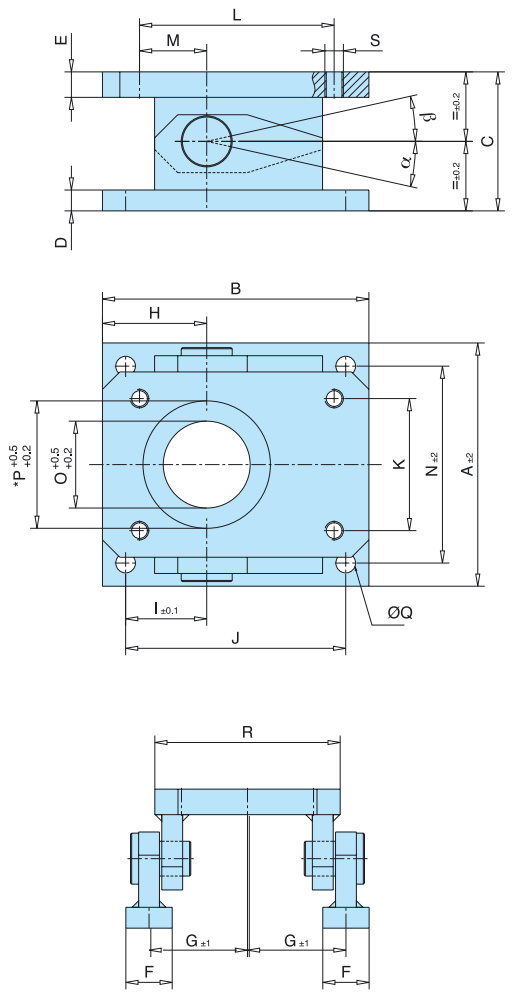

In order to allow worm gear screw jacks to carry out swiveling and tipping movements, the drive elements must be secured at two points and permitted to move. This can be done using a drag bearing arrangement and a head (IV) or coupling head, or by means of a swivel-lug configuration. The lateral force resulting from the swiveling motion should be minimized as much as possible by means of low-friction articulations.

Only the most recent dimension plans are binding

Size	Dimension																				
	A	B	C	D	E	F	G	H	I	J	K	L	M	N	O	P*	ØQ	R	S	α°	β°
On Application																					

Swivel mounting bases for the Merkur range are available on request

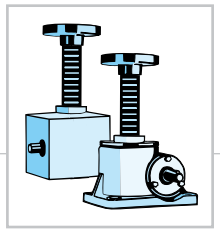

Merkur range dimension plans

MERKUR with hollow shaft and motor (on application only, type 1 & 2, not stocked)

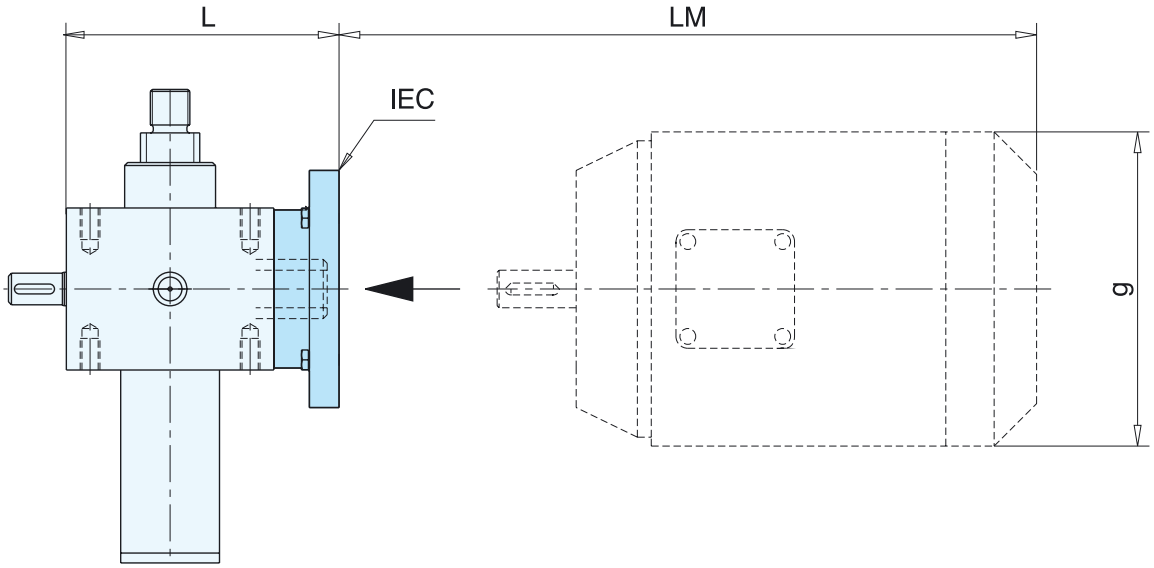

Size	Motor type	IEC flange			Motor shaft			
		Øa1	Øb1	Øe1		L	LM[1] (approx.)	g
M 0	56	80	50	65	Ø9x20	74	167	108
M 0	63	90	60	75	Ø11x23	74	190	126
M 1	63	90	60	75	Ø11x23	100	190	126
M 1	71	105	70	85	Ø14x30	100	213	142
M 2	63	90	60	75	Ø11x23	118	190	126
M 2	71	105	70	85	Ø14x30	118	213	142
M 2	80	120	80	100	Ø19x40	118	233	159
M 3	71	105	70	85	Ø14x30	138	213	142
M 3	80	120	80	100	Ø19x40	138	233	159
M 4	80	120	80	100	Ø19x40	193	233	159
M 4	90	140	95	115	Ø24x50	193	280	179
M 4	100	160	110	130	Ø28x60	193	308	200
M 5	80	120	80	100	Ø19x40	213	233	159
M 5	90	140	95	115	Ø24x50	213	280	179
M 5	112	160	110	130	Ø28x60	213	328	222
M 6	on request							
M 7								
M 8								

[1] Without a brake

Motor mounting flange (made to order)

The various different operating circumstances of the worm gear screw jacks sometimes call for directly-installed motors. Motor installation can be carried out, with the aid of lantern gears and flexible couplings, provided the weight and dimensions of the two drive elements do not differ too much from each other. Cast mating flanges are available to provide a solution in this case.
If the drive motor is to be supplied and fitted onsite, please provide us with a dimensional drawing showing the connection points. The customer should also determine whether installation on the jacking element should be right- or left-handed

In order to simplify procedures, only the lantern gears most often required are shown below.
Please consult the supplier in the event of queries.

Merkur range, details on request

Merkur

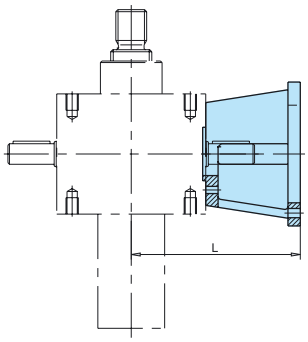

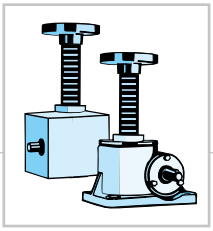

Worm gear screw jacks

Technical information

Lifting-element efficiency ratings „η"

Spindle efficiency ratings η_{Sp} (steel/bronze lubricated)

Tr spindle	14x4	18x6	18x4	20x4	22x5	26x6,28	30x6	35x8	40x7
Spindle efficiency rating[%]	49	54	42,5	40	43	45	40	43	36,5
Tr spindle	40x8	50x9	58x12	60x12	60x9	65x12	70x10	70x12	80x10
Spindle efficiency rating[%]	40	37	40,5	39,5	32,5	37,5	31,6	35,5	29
Tr spindle	90x16	100x10	100x16	120x14	120x16	140x20	160x20	190x24	220x28
Spindle efficiency rating[%]	36,5	24	34	28	30	31,6	28,5	28,8	29

Merkur range

Gear efficiency ratings η_{HE} of Merkur gears and spindles with grease lubrication

Size	M0	M1	M2	M3	M4	M5	M6	M7	M8
η_{HE}	0,34	0,30	0,28	0,27	0,25	0,19	0,19	0,15	0,15
Size	**M0 L**	**M1 L**	**M2 L**	**M3 L**	**M4 L**	**M5 L**	**M6 L**	**M7 L**	**M8 L**
η_{HE}	0,24	0,23	0,21	0,19	0,18	0,14	0,14	0,11	0,11

Gear efficiency ratings η_G of Merkur gears with grease lubrication (without spindles)

Size	M0	M1	M2	M3	M4	M5	M6	M7	M8
η_G	0,68	0,71	0,70	0,69	0,69	0,57	0,64	0,61	0,57
Size	**M0 L**	**M1 L**	**M2 L**	**M3 L**	**M4 L**	**M5 L**	**M6 L**	**M7 L**	**M8 L**
η_G	0,47	0,54	0,51	0,48	0,49	0,42	0,47	0,45	0,42

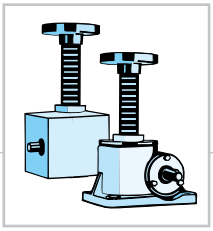

Worm gear screw jacks

Technical information

Critical spindle turning speed

The critical turning speed (only configuration type 2) is dependent on the spindle diameter, the spindle length and the spindle bearing (see case 1-4).

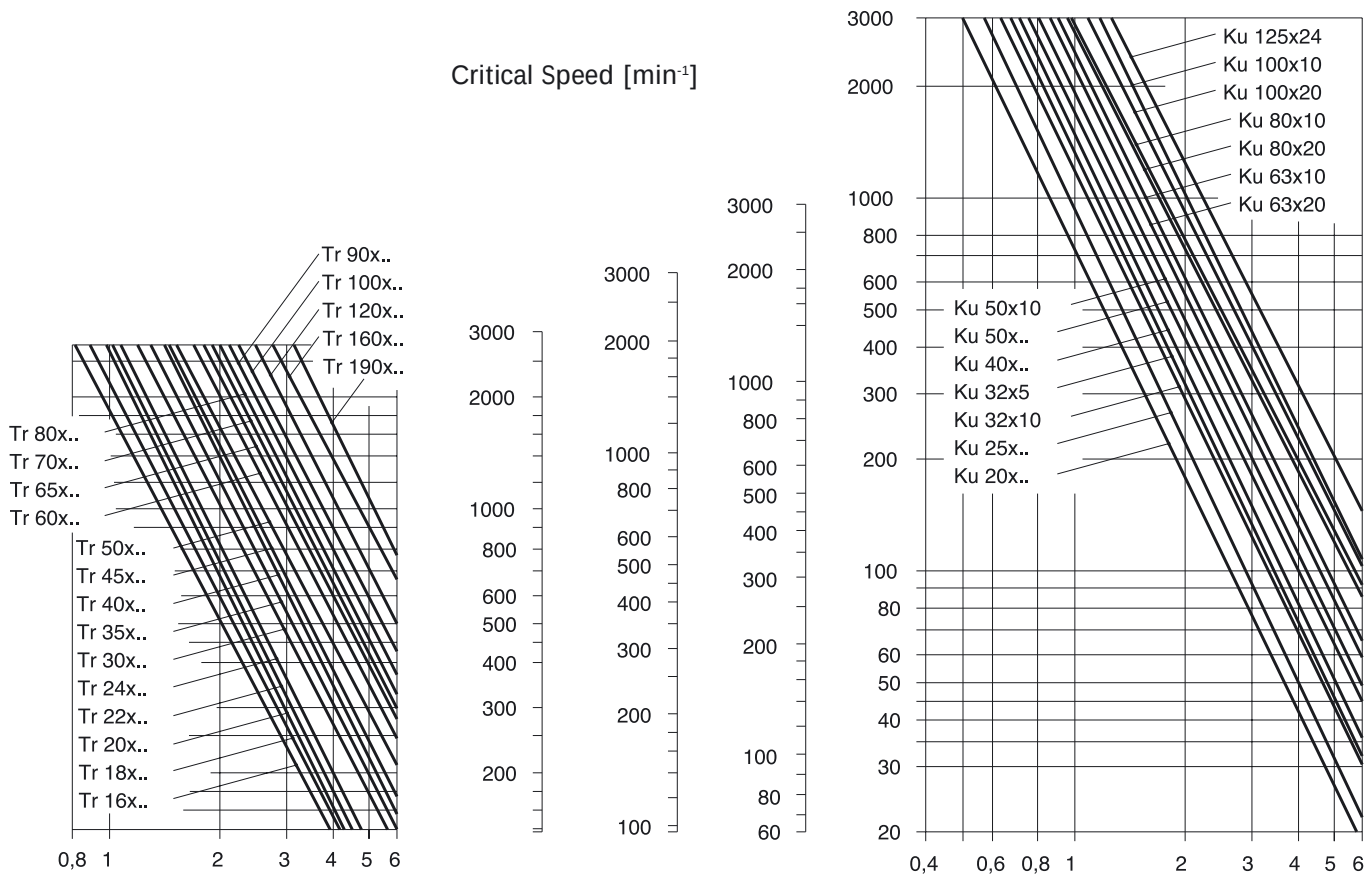

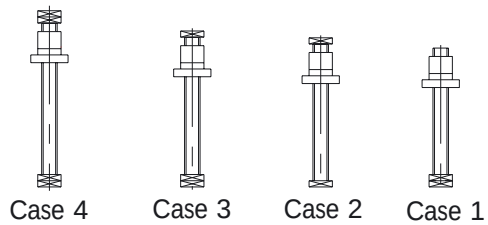

Lifting screw bearing arrangement

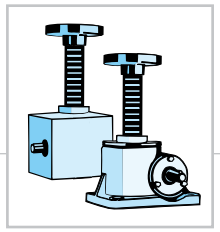

Technical information

Ball screw spindle Ku

Standard dimensions and load capacities for configuration type 1. Other pitches and load capacities on request. Reinforced spindles with other pitches and higher load capacities can be used with configuration type 2.

Merkur (made to order only, consult with MT before specifying)

Size	Ku spindle	C_{dyn} [kN]	C_{stat} [kN]
M 0		**on request**	
M 1	16 x 5	7	12,7
M 2	20 x 5	8	17
M 3	25 x 5	9,5	22,7
M 4	40 x 5	19	63,5
	40 x 10	30	70

$\eta_{sp} \approx 0{,}9$

Further Ku spindles on request.
Please ask for a copy!

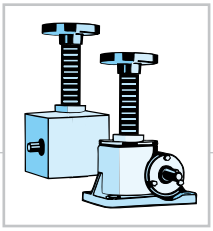

Worm gear screw jacks

Technical information

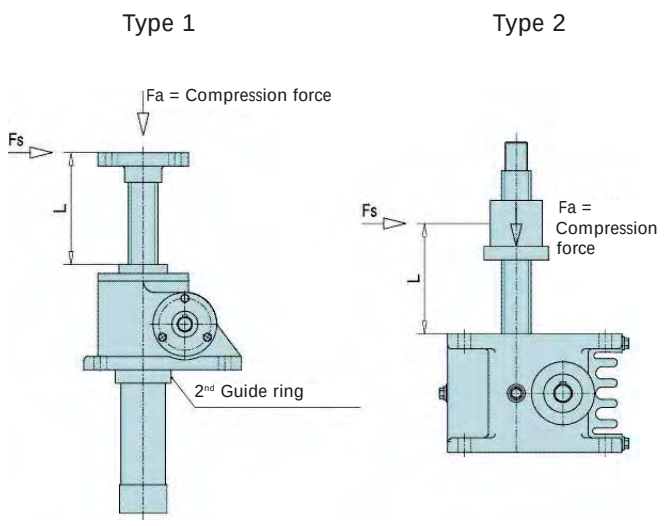

Type 2: Fs permitted in static configuration only

3.3.8 Permitted lateral force on spindle

The permitted lateral force (Fs) on the spindle depends on the axial force (Fa). the diameter of the spindle (d) and the length of the spindle L. As compression and buckling force exercise negative influence, these factors were taken into account when determining this permitted lateral force (Fs). The maximum length of the spindle (L) is limited by the value generally used in mechanical engineering applications: "unguided spindle length = 4x free clamping length".

Lateral force on the spindle is only permitted on screw jacks fitted with two guide rings.

Lateral forces on spindles or travelling nuts exercise a reinforced edge compression on the movement thread, leading to increased wear and a shortened service life.

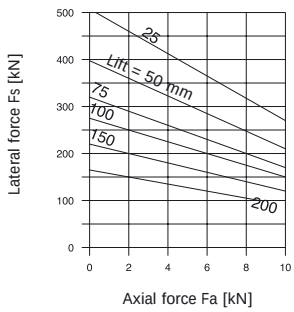

M 2
(Tr20x4 u. Tr22x5)

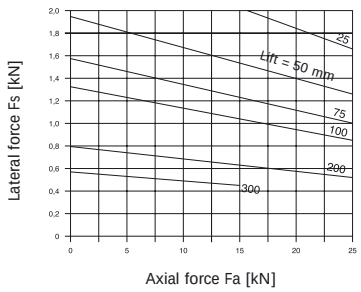

M 3
(Tr30x6)

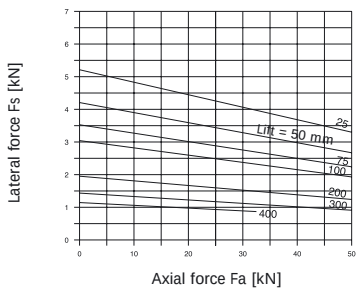

M 4
(Tr40x7)

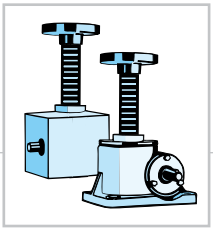

Worm gear screw jacks

Technical information

Permitted radial force on drive system

Toothed and/or chain wheels along with pulley wheels bring radial forces to bear on the drive shaft of the worm gear screw jacks. The maximum permitted value depends on the lifting force and size of the jacking element.
The table is calculated for $\varphi \sim 30°$ or 330°. This is the least-favorable bearing with respect to application of the lifting force and turning direction.

Permitted radial force (Fr) on application of force in l/2

Minimum diameter (D) for toothed wheel or pulleys:

$$D_{min} = 19100 \frac{P}{Fr\ max \times n} = \frac{2\ T_A}{Fr\ max}\ (m)$$

P (kW) = power rating
Fr max (N) = max. radial force (according to table)
n (min^{-1}) = turning speed of drive-shaft
T_A (Nm) = driving torque

Merkur range	Fr max (N)	at Mt max (Nm)
M 0	70	1,5
M 1	100	3,4
M 2	200	7,1
M 3	300	18
M 4	500	38

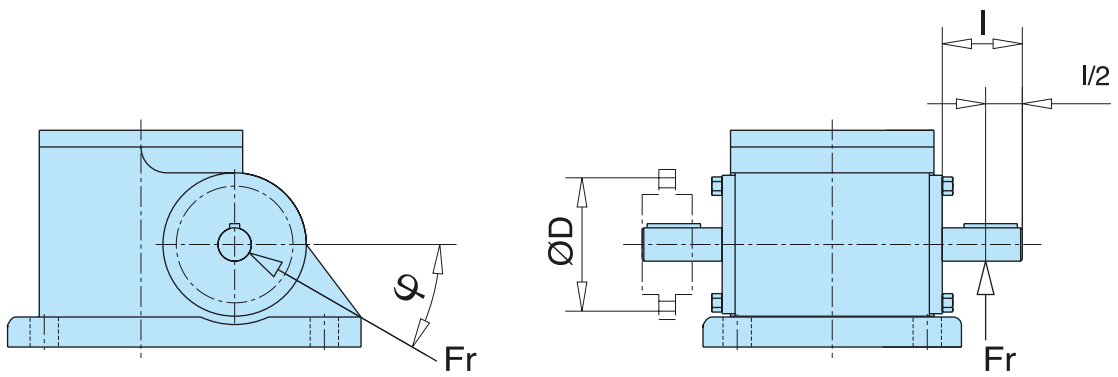

Other Motion Tech Products

Servomech®

Haydon Motion Solutions kerk™

KOLLMORGEN®

Zettlex

Precision in the Extreme

LinMot®

Distributors for Australia & New Zealand

MOTION TECHNOLOGIES PTY LTD

24/22-30 Northumberland Road
Caringbah NSW 2229 Australia
Phone: (02) 9524 4782
Fax: (02) 9525 3878

sales@motiontech.com.au
www.motiontech.com.au