V-ROBOT®
Linear Drives

www.motiontech.com.au

CONTENTS Ball Screw Modules

Product Selection 002
Specification List 008
Cartesian Robot Configuration 010
Applications 015
Product Structure &Function 022
Product Selection Guidance 031
Motor's Flange Selection Tool 033
VT4 035
VT5 039
VT6 043
VF6 047
VF8 051
VF10 055
VF12 059
VF14 064
VF17 070
VF22 075
VC6 107
VC8 111
VC10 115
VC12 120
VC14 125
VC17 130
VC22 135
VF14D2 189
VC14D2 197
VF8D1-Gripping Type Single Axis Robot 205
VF12D1-Gripping Type Single Axis Robot 210

Product Selection

W-ROBOT® Linear Drives

Integrated specifications with multi-functions for your various solutions in the various industries.

1 Ball screw drive/ Normal environment ▶P.034

Small Type

VT4

Maximum Stroke	240mm
Maximum Payload	5KG ····· 036
Body Width	45mm

Economy series

VT5

Maximum Stroke	600mm
Maximum Payload	10KG ·····040
Body Width	55mm

Economy series

VT6

Maximum Stroke	600mm
Maximum Payload	30KG ·····044
Body Width	65mm

Economy series

VF6

Maximum Stroke	1000mm
Maximum Payload	25KG ····· 048
Body Width	60mm

Economy series

VF8

Maximum Stroke	1000mm
Maximum Payload	35KG ·····052
Body Width	80mm

Standard Type

VF10

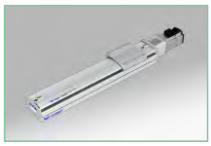

Maximum Stroke	1000mm
Maximum Payload	65KG ·····056
Body Width	100mm

VF12

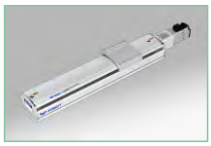

Maximum Stroke	1000mm
Maximum Payload	65KG ····· 060
Body Width	100mm

VF14

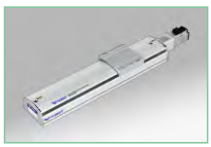

Maximum Stroke	1500mm
Maximum Payload	115KG·····065
Body Width	140mm

Large Type

Heavy loading

VF17

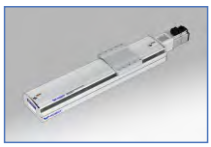

Maximum Stroke	1500mm
Maximum Payload	120KG····071
Body Width	170mm

Large Type

Heavy loading

VF22

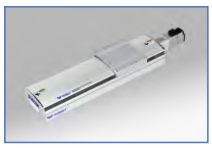

Maximum Stroke	1500mm
Maximum Payload	150KG·····076
Body Width	220mm

3 Ball screw drive/Dust-free environment ▶P.106

Small Type

VC6

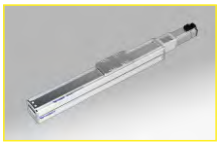

Maximum Stroke	800mm
Maximum Payload	30KG·····108
Body Width	60mm

VC8

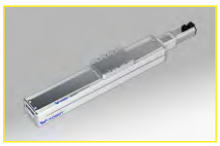

Maximum Stroke	1000mm
Maximum Payload	35KG·····112
Body Width	80mm

Product Selection

Standard Type

VC10

Maximum Stroke	1000mm
Maximum Payload	65KG·····116
Body Width	100mm

VC12

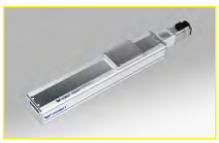

Maximum Stroke	1200mm
Maximum Payload	84KG·····121
Body Width	120mm

VC14

Maximum Stroke	1500mm
Maximum Payload	115KG····126
Body Width	140mm

Large Type

VC17

Heavy loading

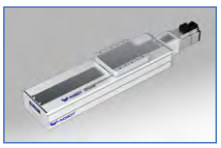

Maximum Stroke	1500mm
Maximum Payload	120KG ···131
Body Width	170mm

VC22

Heavy loading

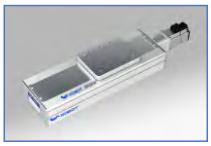

Maximum Stroke	1500mm
Maximum Payload	150KG····136
Body Width	220mm

6 Dual motors series

▶ P.188

Ball screw drive/ Normal environment

VF14D2

Maximum Stroke	1500mm
Maximum Payload	115KG···· 190
Body Width	140mm

Ball screw drive/Dust-free environment

VC14D2

Maximum Stroke	1500mm
Maximum Payload	115KG·····198
Body Width	140mm

7 Gripping type single axis robot

▶P.205

VF8D1

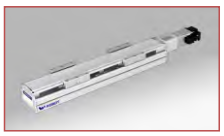

Maximum Stroke	1500mm
Maximum Payload	25KG ····· 207
Body Width	80mm

VF12D1

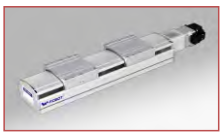

Maximum Stroke	1500mm
Maximum Payload	84KG ···· 211
Body Width	120mm

Specification

W-ROBOT®
Linear Drives

Company	_____	Register Date	_____	Contact	_____
Dept	_____	Tel	_____	Ext	_____
E-mail	_____	Mobile	_____	Address	_____

Single axis required

Stroke (mm): _____

Speed (mm/s): _____

Payload (kg): _____

Repeatability(mm) :

☐ ±0.006

☐ ±0.01

☐ ±0.04

☐ Other _____

Usage Environment

☐ General

☐ Dust-free (Cleaness type)

(Cleanliness: Class10 Class100 Class1000)

Installation Way	Fixed whole-plane Horizontal 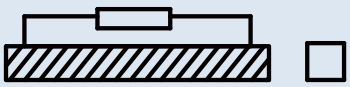 Side 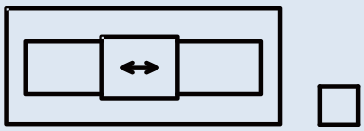 Vertical 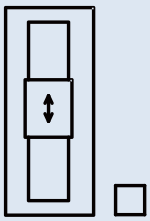
Space required	Loose model choice Ball Screw Drive 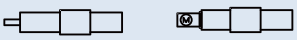 ☐BA ☐ BC (standard) Belt Drive 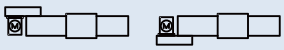 ☐BR ☐BL Compact model choice Ball Screw Drive 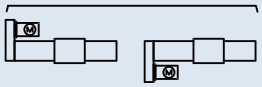 ☐BR ☐BL Belt Drive 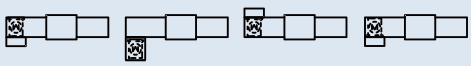 ☐BLU ☐BRU ☐BRD ☐BLD Motor Power can be increased by external installed
Sensor	☐ Optoelectronic type(External) ☐ Metal induction type(External)
Applications	☐ Automatic Assembly Machine ☐ Labeling Machine ☐ Film Sticking Machine ☐ Laminating Machine ☐ Auto-Screwdriving Machine ☐ Spraying Machine ☐ CCD Visual Inspection Equipment ☐ Loading and Unloading Equipment
Remarks	

Specification

Company	_____	Register Date	_____	Contact	_____
Dept	_____	Tel	_____	Ext	_____
E-mail	_____	Mobile	_____	Address	_____

Multi Axis Required

Stroke (mm) X: Y: Z:

Speed (mm/s) X: Y: Z:

Payload (kg):

Repeatability(mm) :

☐ ±0.006

☐ ±0.01

☐ ±0.04

☐ 其它(Other)_____

Usage Environment

☐ General

☐ Dust-free (Cleaness type)

(Cleanliness: Class10 Class100 Class1000)

Combination Types

Arm Type

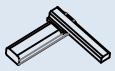

(A1) ☐

(A2) ☐

(A3) ☐

(A4) ☐

Gantry Type

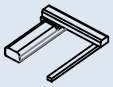

(G1) ☐

(G2) ☐

(G3) ☐

(G4) ☐

Moving Arm Type

(P1) ☐

(P2) ☐

XZ Type

(F1) ☐

(F2) ☐

Multi-axis Type

Reference the P11-15 : Images No.

☐ Arm type with 2-axis(A)

☐ Arm type with 3-axis(A)

☐ Gantry type with 2-axis(G)

☐ Gantry type with3-axis(G)

☐ Spontaneous Moving Gantry type with 2-axis(G)

☐ XY type with 2-axis(F)

☐ Moving arm type with 2-axis(P)

☐ Moving arm type with 3-axis(P)

Sensor

☐ Optoelectronic type(External) ☐ Metal induction type(External)

Applications

☐ Automatic Assembly Machine ☐ Film Sticking Machine ☐ Laminating Machine

☐ Auto-Screwdriving Machine ☐ Spraying Machine ☐ CCD Visual Inspection Equipment ☐ Other _____

Remarks

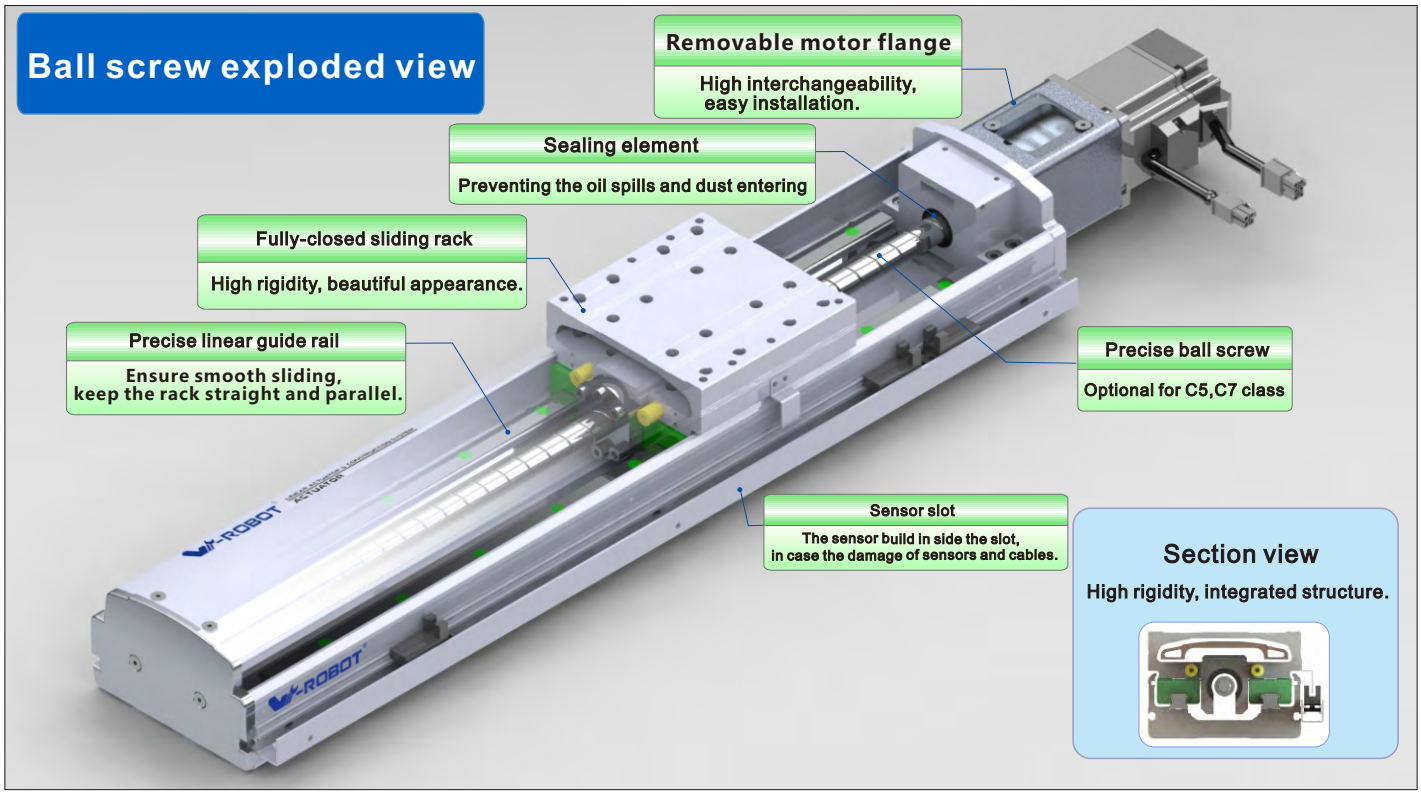
Ball screw exploded view
Removable motor flange
High interchangeability, easy installation.
Sealing element
Preventing the oil spills and dust entering
Fully-closed sliding rack
High rigidity, beautiful appearance.
Precise linear guide rail
Ensure smooth sliding, keep the rack straight and parallel.
Precise ball screw
Optional for C5,C7 class
Sensor slot
The sensor build in side the slot, in case the damage of sensors and cables.
Section view
High rigidity, integrated structure.

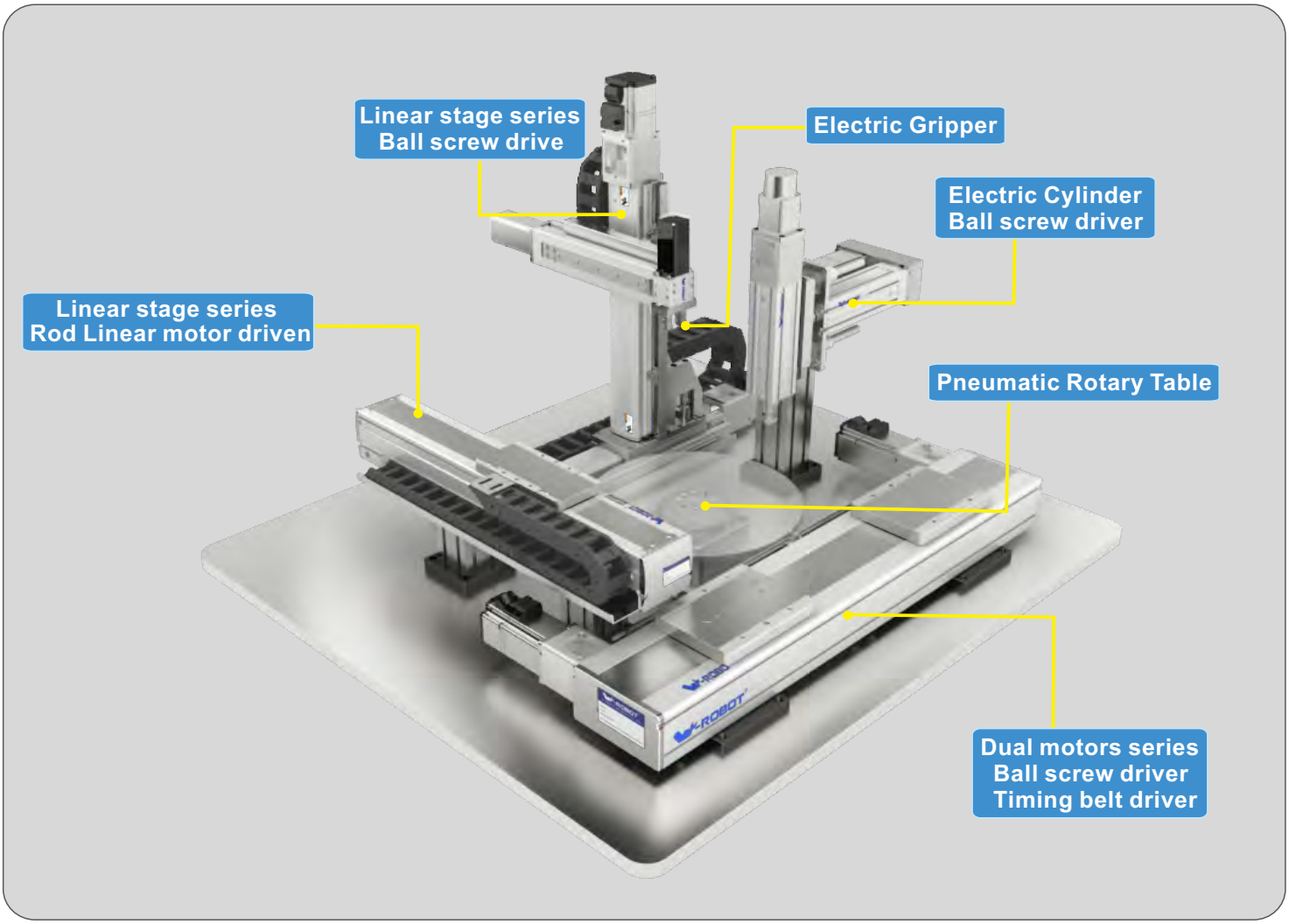
Linear stage series
Ball screw drive
Electric Gripper
Electric Cylinder
Ball screw driver
Linear stage series
Rod Linear motor driven
Pneumatic Rotary Table
Dual motors series
Ball screw driver
Timing belt driver

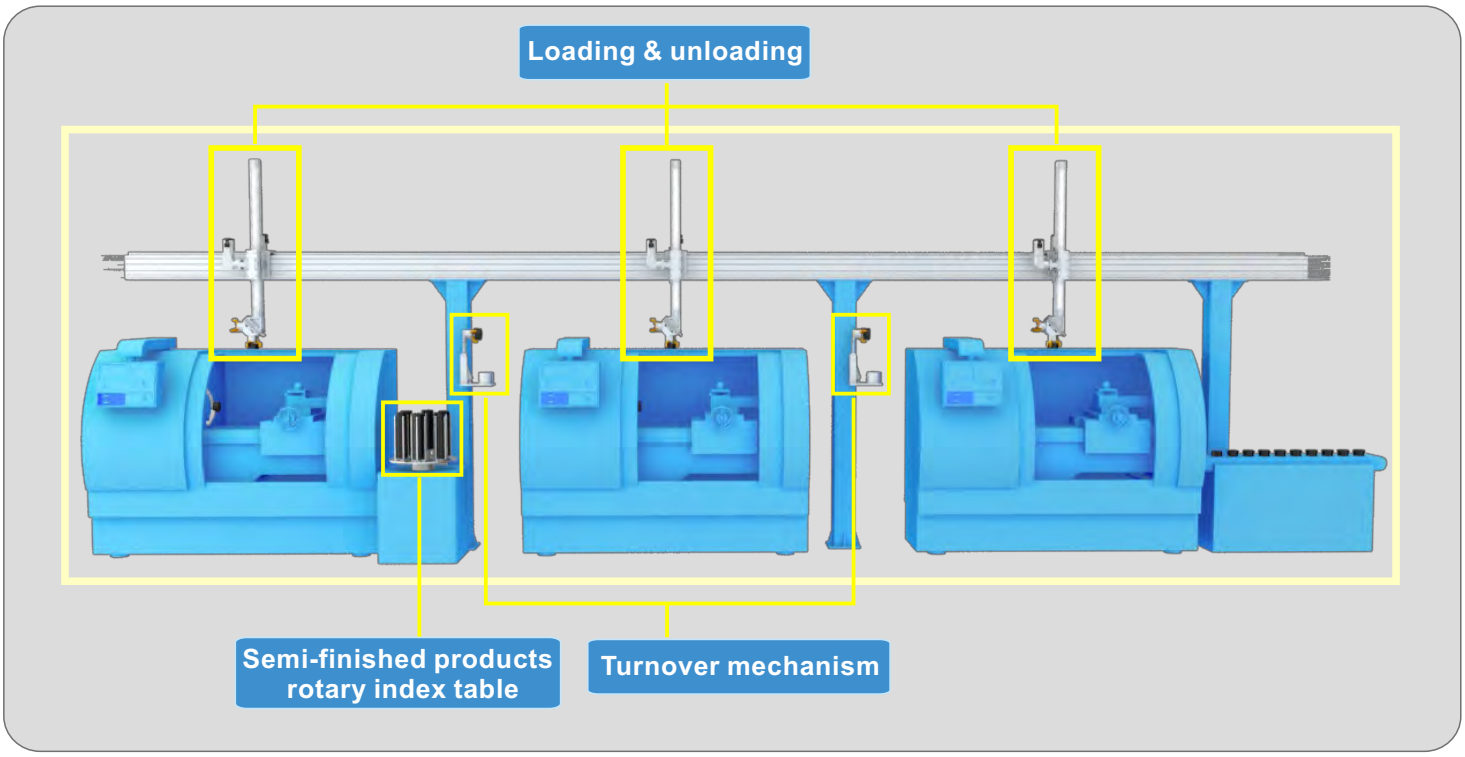
Loading & unloading
Semi-finished products
rotary index table
Turnover mechanism

Dual Motors Series

Pick & place on multi-station conveyor

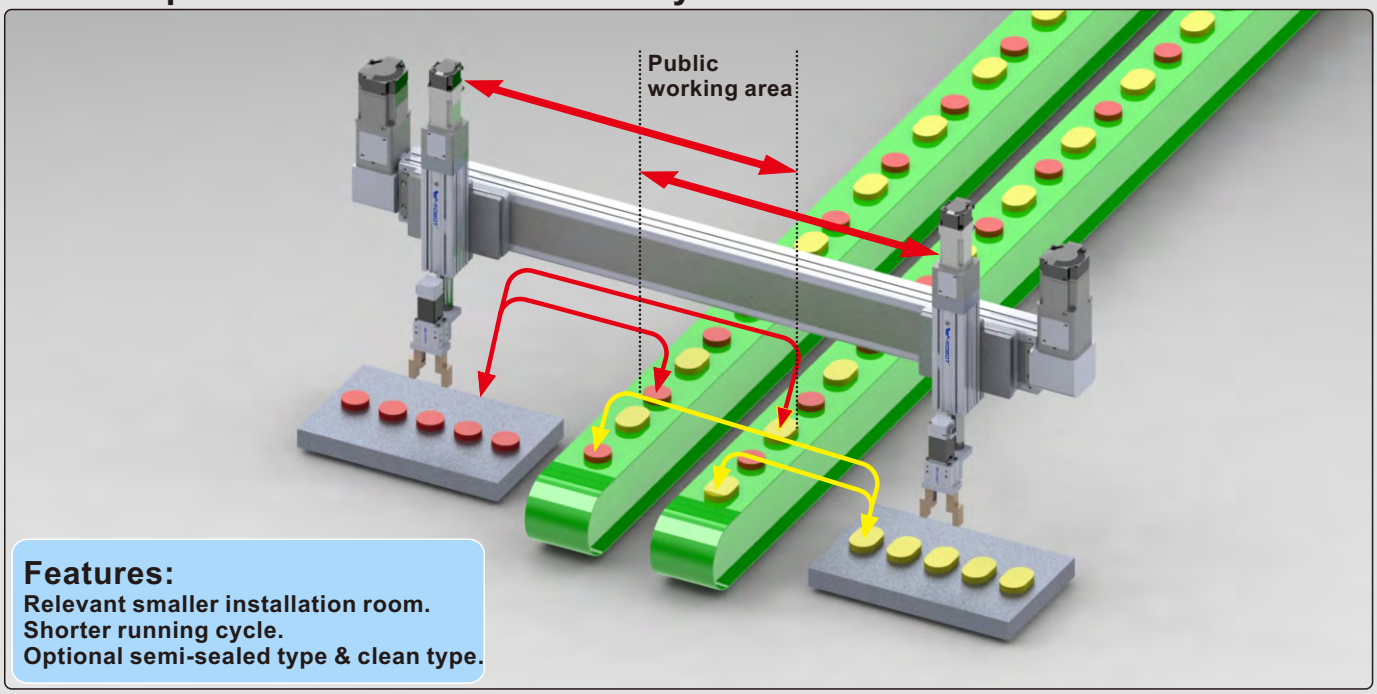

Features:
Relevant smaller installation room.
Shorter running cycle.
Optional semi-sealed type & clean type.

Loading & unloading on the multi-station testing equipment

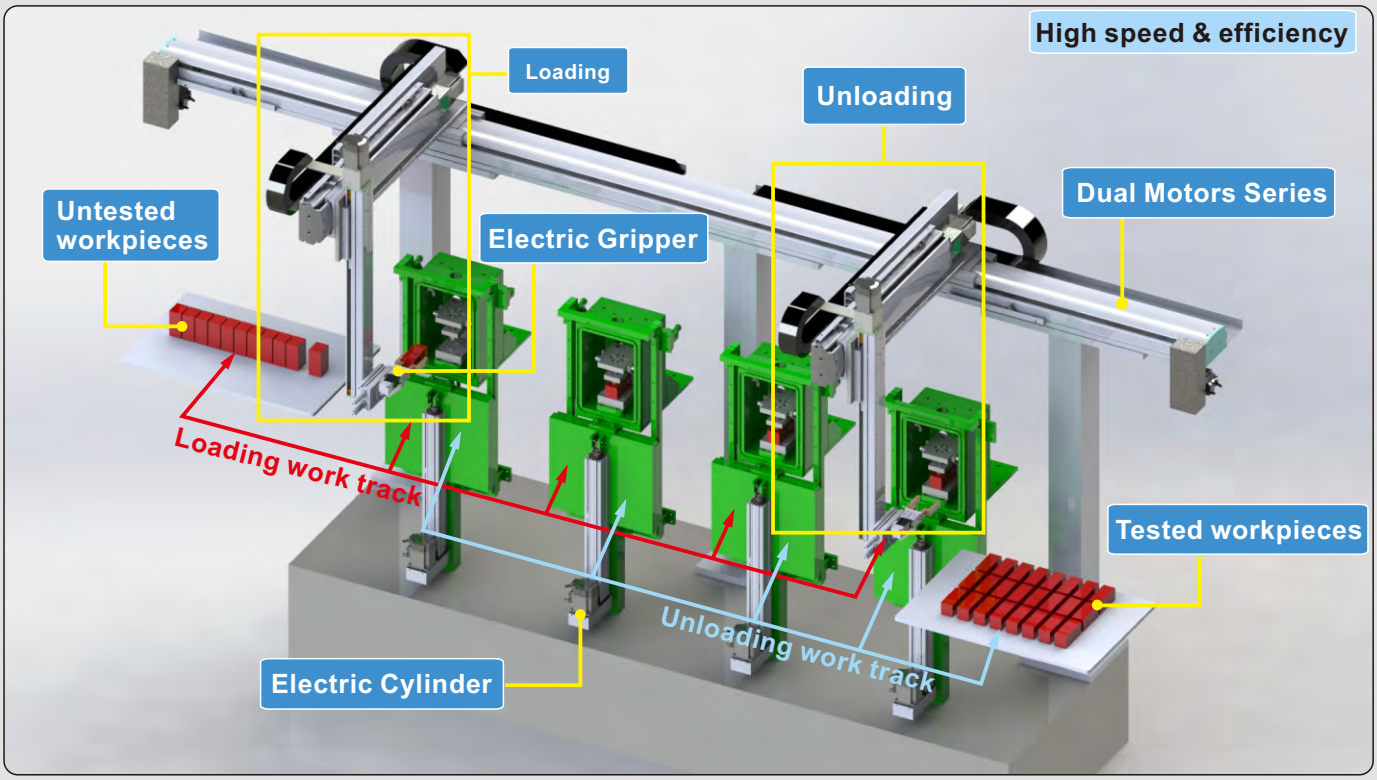

Gripping Type Single Axis Robot

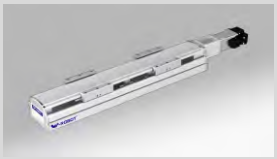

VF8D1-BC

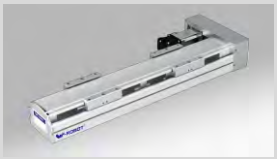

VF8D1-BL

VF8D1-BR

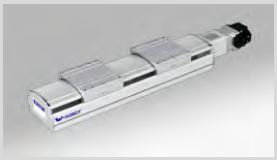

VF12D1-BC

VF12D1-BL

VF12D1-BR

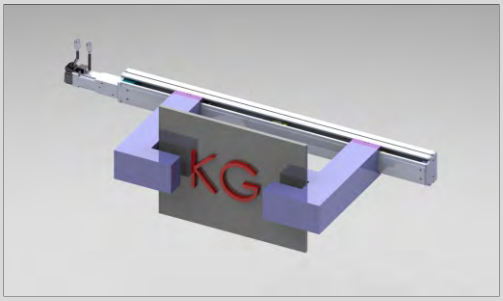

Features:

Customization available for multi-stroke, support large-size parts gripping.
Sorting different size workpieces.
Control available for speed,positioning, gripping force.

Linear actuator Item No. detailed specification.

VF10 _ — L16 — P — S100 — BC — ZP10B — C4 _ — ___

Base Style	
V	Vseries
F	Ball Screw-Semi enclosed
6	Body width60
8	Body width80
10	Body width100
12	Body width120
14	Body width140
17	Body width170
22	Body width220
T4	Body width45
T5	Body width55
T6	Body width65

Mounting surface are the guide rail

Ball Screw Lead	
L5	5mm
L10	10mm
L12	12mm
L16	16mm
L20	20mm

Accuracy class	
P	High precision
C	Common precision

Motor Qty	
No	Single motor
D2	Double motor

Stroke(mm)	
VT4	80-240
VT5	80-600
VT6	80-600
VF6	100-1000
VF8	100-1000
VF10	100-1000
VF12	100-1200
VF14	100-1500
VF17	100-1500
VF22	100-1500

Motor way	
BA	Basis
BC	External
BR	Right Side
BL	Left Side

Motor Type	
P	Panasonic
M	Mitsubishi
Y	Yaskawa
T	Delta
W	W-Robot

* For Z: Motor is from clients

Motor power	
10	100W
20	200W
40	400W
75	750W
57	57-Ø8
	57-Ø6.35

Brakes	
No	No brake
B	With brake

Original Sensor position	
External	
C	Motor side
D	Oppsite motor side
E	No

Sensor switch	
External	
2	2pcs
3	3pcs
No sensor	

Sensor type	
No	NPN
P	PNP

Non-standard, d.c.,	
No	Standard type
BL1	Detailed information please see chart 1
B2	
D01	
U01	
UD01	
H01	
HU01	
HD01	
HUD01	
M01	
S01	

*Chart 1:non-standard items.

Name	Detailed information
BL1	Longer sliding rack
B2	Double sliding rack
D01	Down installation hole customization
U01	Up installation hole customization
UD01	Both up and down installation hole customization
H01	Height customization
HU01	Both height and up installation hole customization
HD01	Both height and down installation hole customization
HUD01	Both height and up-down installation hole customization
M01	Motor installation hole customization
S01	Stroke customization
T	Increase the sealing strip

The motor connecting flange >>>

Type	The motor connecting flange drawing	Motor size	Motor power	Motor shaft dia.	Motor brand	Reference No.
F1	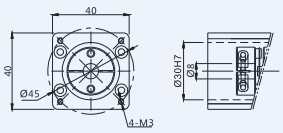	□38	100W	Ø8	Panasonic	MSMD012G1U
F2	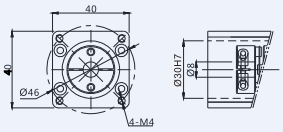	□40	100W	Ø8	Mitsubishi Yaskawa Delta Sankyo	HF-KN13 SGMJV-01ADA21 ECMA-C20401 MA101N2KN
F3	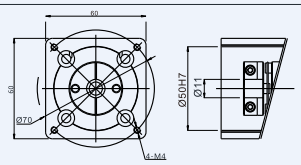	□60	200W	Ø11	Panasonic	MSMJ022G1U MHMJ022G1U
F4	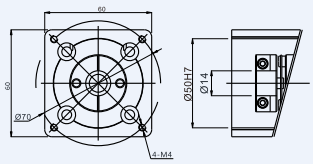	□60	400W	Ø14	Panasonic	MSMJ042G1U MHMJ042G1U
F5	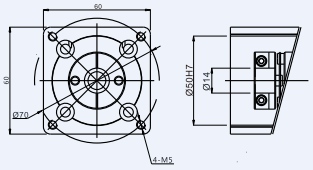	□60	200W 400W	Ø14 Ø14	Mitsubishi	HF-KN23 HF-KN43
					Yaskawa	SGMJV-02ADA21 SGMJV-04ADA21
					Delta	ECMA-C20602 ECMA-C20604
					Sankyo	MA201N2KN MA401N2KN
F6	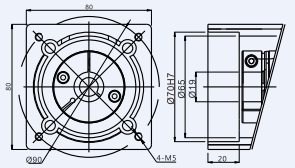	□80	750W	Ø19	Panasonic	MSMJ082G1U MHMJ082G1U
F7	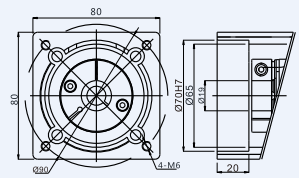	□80	750W	Ø19	Mitsubishi	HF-KN73
					Yaskawa	SGMJV-08ADA21
					Delta	ECMA-C20807
					Sankyo	MA751N2KN
F8	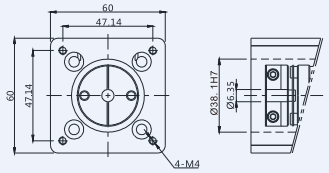	□56.4	57 Motor	Ø6.35	JMC	57J1876
					Leadshine	57HS09
F9	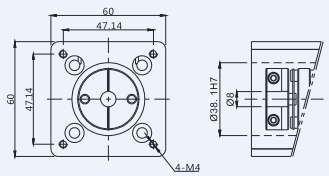	□56.4	57 Motor	Ø8	JMC	57J1880
					Leadshine	57HS22
					Oriental	PK266PA

Linear Stage Series

Ball Screw Drive
Normal Environment

Small Type

VT4

Maximum Stroke	240mm
Maximum Payload	5KG ·····036
Body Width	45mm

Small Type

VT5

Economy series

Maximum Stroke	600mm
Maximum Payload	10KG ·····040
Body Width	55mm

Small Type

VT6

Economy series

Maximum Stroke	600mm
Maximum Payload	30KG ·····044
Body Width	65mm

Small Type

VF6

Economy series

Maximum Stroke	1000mm
Maximum Payload	25KG ·····048
Body Width	60mm

Small Type

VF8

Economy series

Maximum Stroke	1000mm
Maximum Payload	35KG ·····052
Body Width	80mm

Standard Type

VF10

Maximum Stroke	1000mm
Maximum Payload	65KG ·····056
Body Width	100mm

Standard Type

VF12

Maximum Stroke	1200mm
Maximum Payload	84KG ·····060
Body Width	120mm

Standard Type

VF14

Maximum Stroke	1500mm
Maximum Payload	115KG·····065
Body Width	140mm

LargeType

VF17

Heavy loading

Maximum Stroke	1500mm
Maximum Payload	120KG·····071
Body Width	170mm

LargeType

VF22

Heavy loading

Maximum Stroke	1500mm
Maximum Payload	190KG·····076
Body Width	220mm

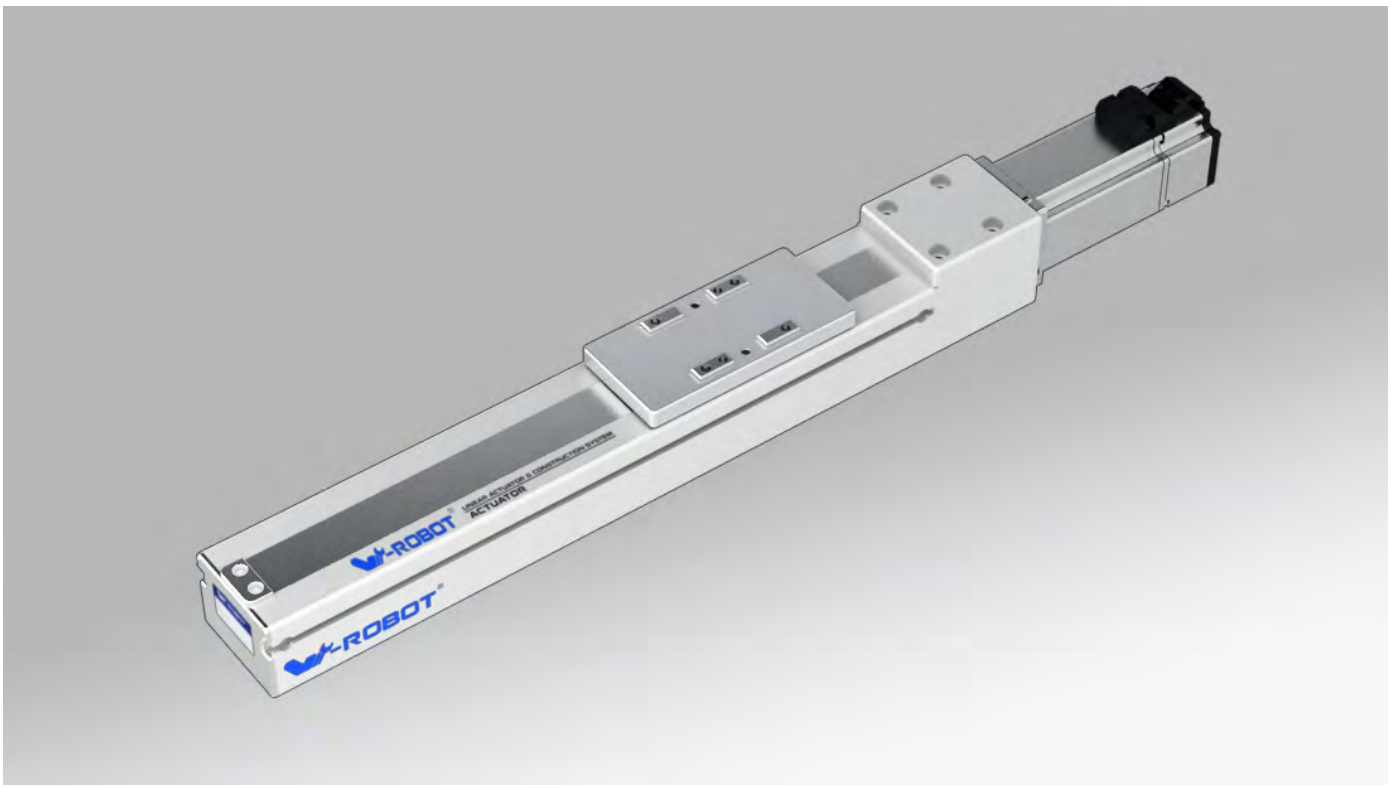

Motor direction

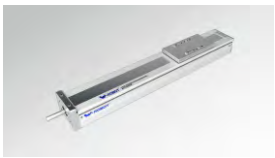

BA

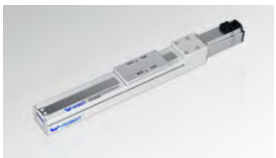

BC

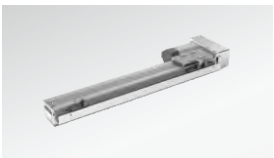

BL

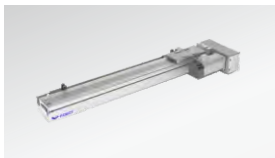

BR

Guide for Model Selection

VT4 — L12 — P — S80 — BC — ZP10B — C3 — ____

Base Style	
VT	Fully-enclosed
4	Body width45

Ball Screw Lead	
L2	2mm
L12	12mm

Accuracy class	
P	High precision
C	Common precision

Stroke(mm)
80-240

Motor way	
BC	External
BR	Right Side
BL	Left Side

Motor Type	
P	Panasonic
T	Delta
W	W-Robot
*For Z: Motor is from clients	

Motor power	
10	100W
57	57-Ø8
	57-Ø6.35

Brakes	
No	No brake
B	With brake

Original Sensor position	
External	
C	Motor side
D	Oppsite motor side
E	No

Sensor switch	
External	
2	2pcs
3	3pcs
No sensor	

Sensor type	
No	NPN
P	PNP

Non-standard, d.c.,	
No	Standard type
BL1	Detailed information please see page032
B2	
D01	
U01	
UD01	
H01	
HU01	
HD01	
HUD01	
M01	
S01	

Specification

Motor power AC (W)		100W		
BallScrewØ		(C7)	8	
		(C5)	8	
Repeatability		(C7)	±0.01	
		(C5)	±0.006	
BallScrew Lead(mm)		/	2	12
MaximumSpeed(mm/sec) 3000 Motor Speed(rpm/mim)		/	100	600
Maximum Payload(kg)	Horizontal	/	5	3
	Vertical	/	1.5	1
RatedThrust(N)		/	900	150
Linear Guide (mm)		24x8.5 -1		
Coupling (mm) (Motor side) x (Ball Screw Side)		5x8		
Motor Output		100W		
Home Sensor		Outside	EE-SX672(NPN) EE-SX672P(PNP)	
		Outside Guide	EE-SX674(NPN) EE-SX674P(PNP)	

Wiring drawing of inductor(original point and endpoint)

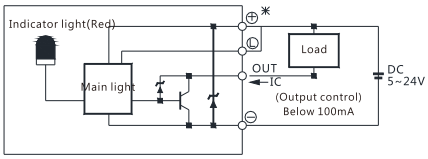

(Figure 1)

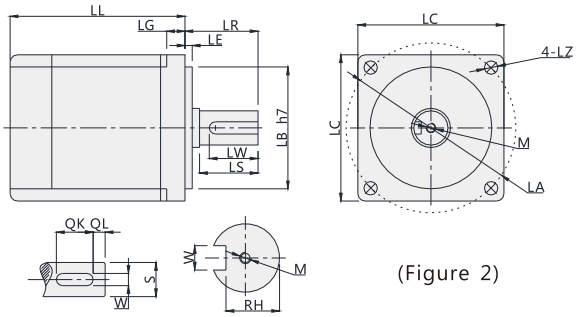

(Figure 2)

Servo Motor Matches List

(Table 1)

Servo motor size																			
Power(W)	Brand	Type		LL	LL(Brakes)	LA	LE	LZ	LC	LG	LW	RH	W	LR	S	LB	M	QK	QL
100W	Panasonic	MSMD012G1□	V:With brake U:No brake	92	122	45	3	3.4	38	6	14	6.2	3h9	25	8h6	30h7	M3x6L	-	-
	Delta	ECMA-C20401□S	S:With brake R:No brake	100.6	136.6	46	2.5	4.5	40	5	16	6.2	3	25	8h6	30h7	M3x8L	-	-
	Mitsubishi	HC-KFS12□K	B:With brake □:No brake	86.5	124.5	46	2.5	4.5	42	5	-	-	-	25	8h6	30h7	-	-	-

□ Stand for empty

Max. Payload Diameters Table

(Unit : mm)

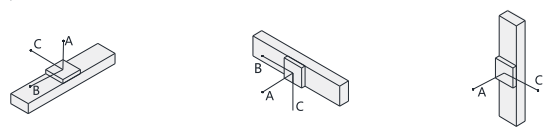

Horizontal installation		A	B	C
Lead 12	1.5kg	289	58	120
	3kg	149	22	50

Wall installation		A	B	C
Lead 12	1.5kg	99	34	250
	3kg	33	0.6	98

Vertical installation		A	C
Lead 12	1kg	83	83

Max. Static Torque Table

(Unit : N.m)

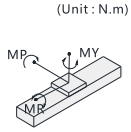

Maximum static torque	
MY	16
MP	20
MR	19

BA: Basis

Unit (mm)

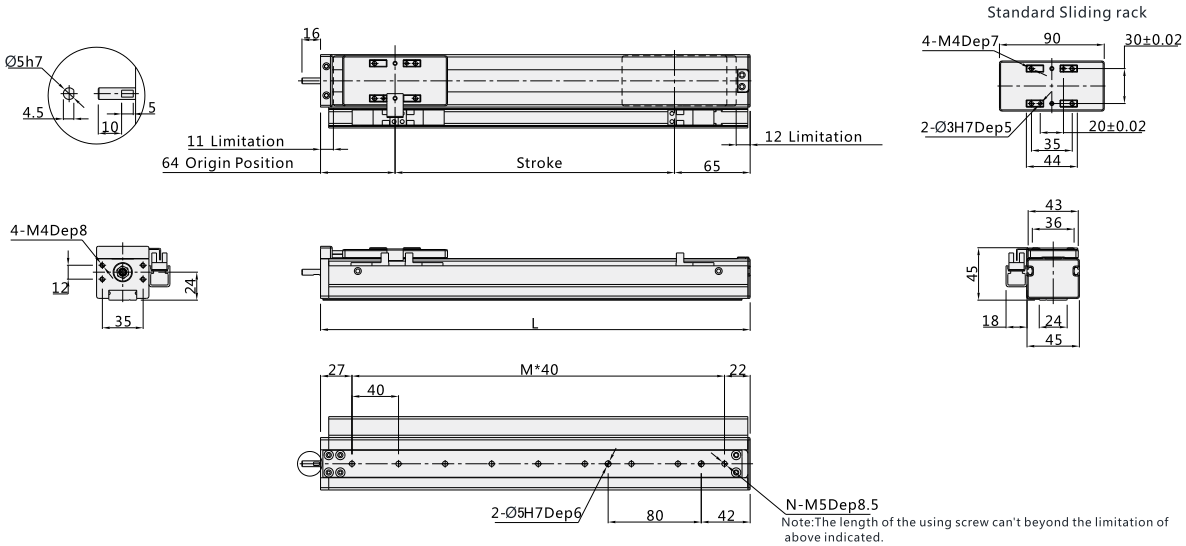

Note: Not including motor weight. *In case special stroke please contact technical services.

Working Stroke	80	120	160	200	240
L	209	249	289	329	369
M	4	5	6	7	8
N	5	6	7	8	9
Weight KG	1.211	1.318	1.425	1.532	1.639

*Products with color are available stock and short lead time.

BC: External

Unit (mm)

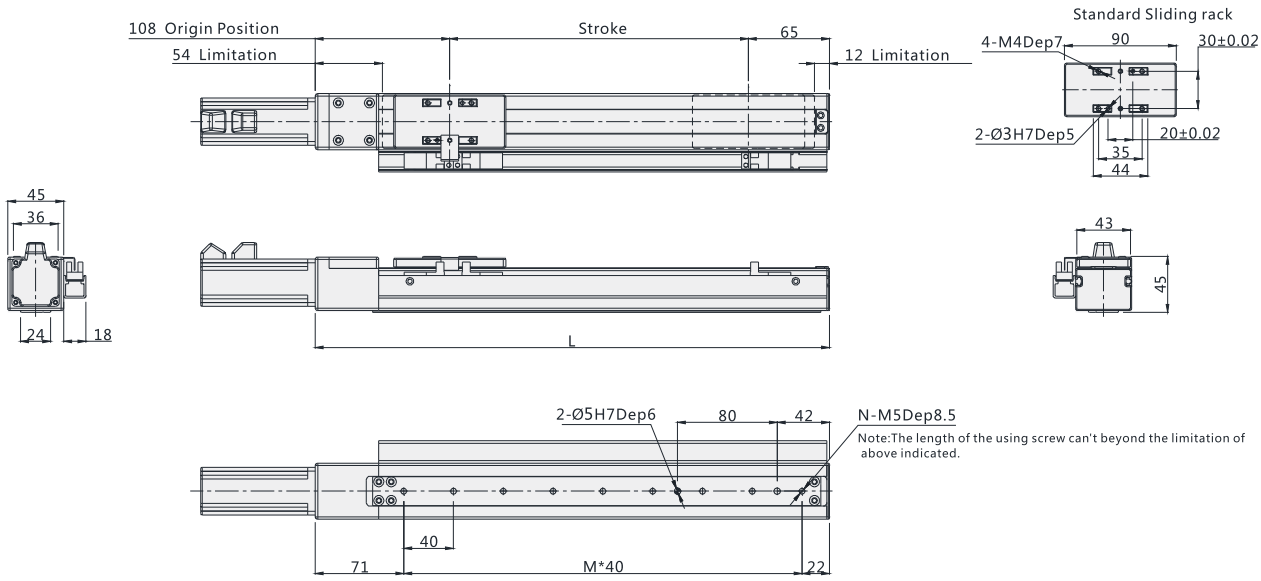

Note: Not including motor weight , in case special stroke please contact technical services. .

Working Stroke	80	120	160	200	240
L	253	293	333	373	413
M	4	5	6	7	8
N	5	6	7	8	9
Weight KG	1.211	1.318	1.425	1.532	1.639

*Products with color are available stock and short lead time.

BL:Left Side

Unit (mm)

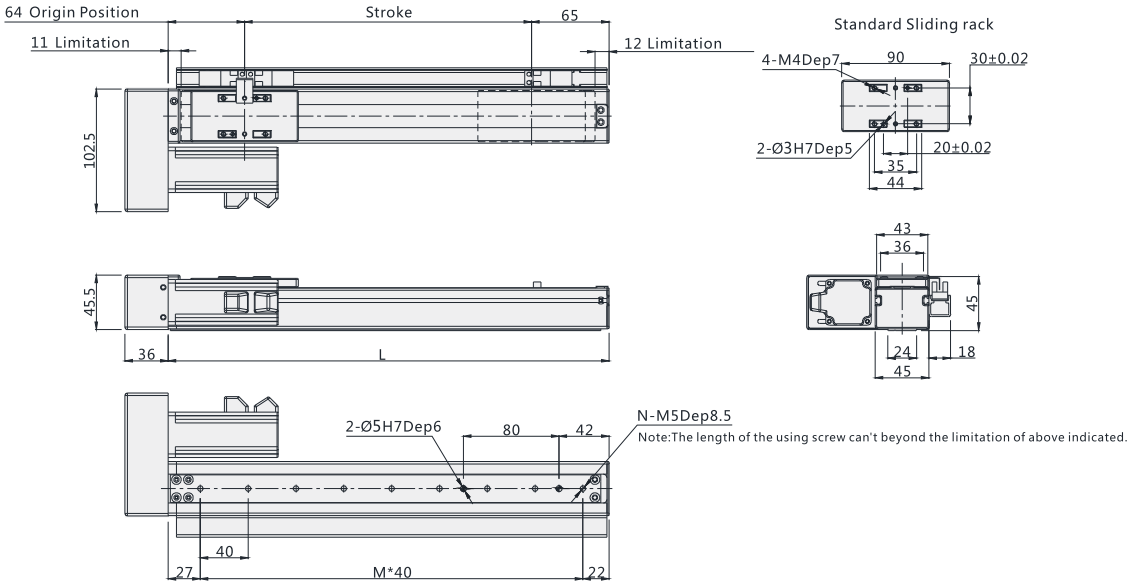

Note: Not including motor weight , in case special stroke please contact technical services. .

Working Stroke	80	120	160	200	240
L	209	249	289	329	369
M	4	5	6	7	8
N	5	6	7	8	9
Weight KG	1.211	1.318	1.425	1.532	1.639

*Products with color are available stock and short lead time.

BR: Right Side

Unit (mm)

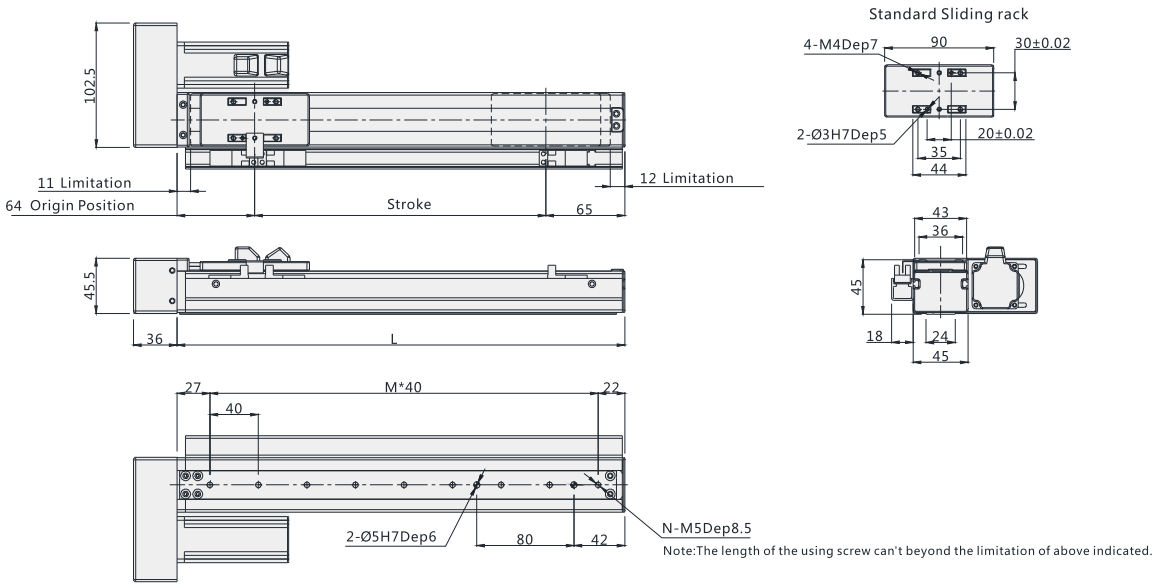

Note: Not including motor weight , in case special stroke please contact technical services. .

Working Stroke	80	120	160	200	240
L	209	249	289	329	369
M	4	5	6	7	8
N	5	6	7	8	9
Weight KG	1.211	1.318	1.425	1.532	1.639

*Products with color are available stock and short lead time.

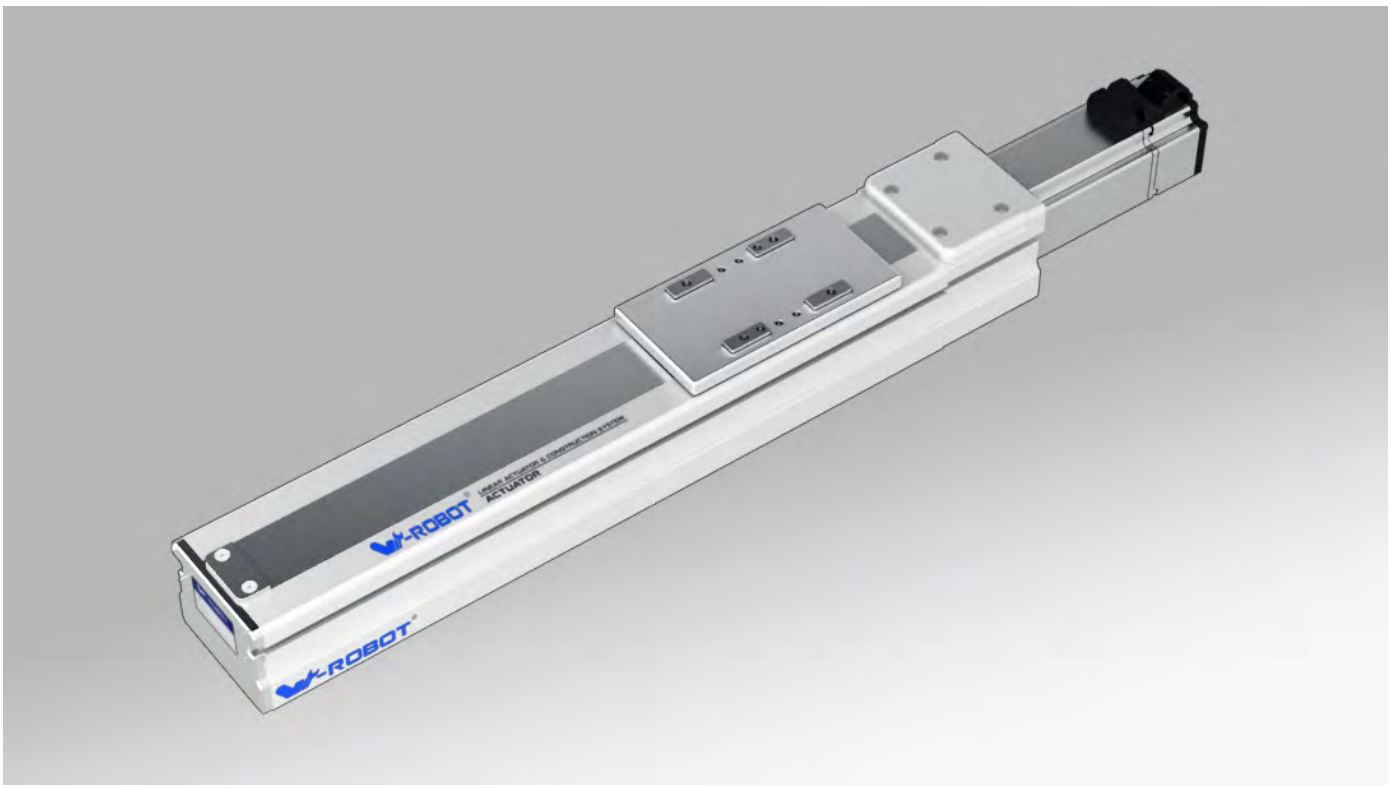

Motor direction

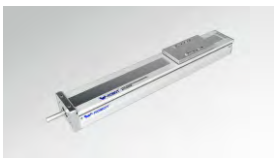

BA

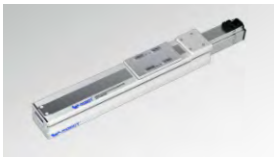

BC

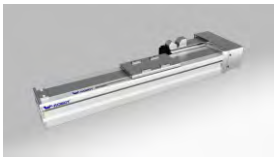

BL

BR

Guide for Model Selection

VT5 – L10 – P – S80 – BC – ZP10B – C3 – ____

Base Style	
VT	Fully-enclosed
5	Body width55

Ball Screw Lead	
L5	5mm
L10	10mm

Accuracy class	
P	High precision
C	Common precision

Stroke(mm)
80-600

Motor way	
BC	External
BR	Right Side
BL	Left Side

Motor Type	
P	Panasonic
T	Delta
W	W-Robot

* For Z: Motor is from clients

Motor power	
10	100W
57	57-Ø8
	57-Ø6.35

Brakes	
No	No brake
B	With brake

Original Sensor position	
External	
C	Motor side
D	Oppsite motor side
E	No

Sensor switch	
External	
2	2pcs
3	3pcs
No sensor	

Sensor type	
No	NPN
P	PNP

Non-standard, d.c.,	
No	Standard type
BL1	Detailed information please see page032
B2	
D01	
U01	
UD01	
H01	
HU01	
HD01	
HUD01	
M01	
S01	

Specification

Motor power AC (W)		100W	
BallScrewØ		(C7)	12
		(C5)	12
Repeatability		(C7)	±0.01
		(C5)	±0.006
BallScrew Lead(mm)		5	10
MaximumSpeed(mm/sec) 3000 Motor Speed(rpm/mim)		250	500
Maximum Payload(kg)	Horizontal	10	5
	Vertical	3	1.5
RatedThrust(N)		330	170
Linear Guide (mm)		24x8.5 -1	
Coupling (mm) (Motor side) x (Ball Screw Side)		8x8	
Motor Output		100W	
Home Sensor		Outside EE-SX672(NPN) EE-SX672P(PNP)	
		Outside Guide EE-SX674(NPN) EE-SX674P(PNP)	

Wiring drawing of inductor(original point and endpoint)

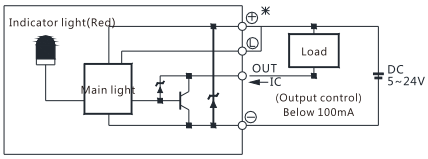

(Figure 1)

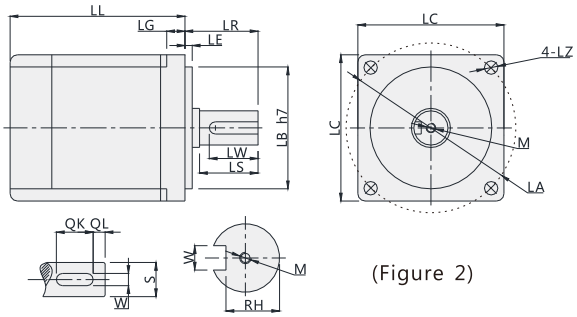

(Figure 2)

* Above repeatability is within strok 300mm,if logner travel needed,it willbe lower.In case stroke over 500 will lead to swing of ball screw,please slow down the speed 15%.Please note figure 2 motor size is same with table 1, or needed to replace coupler and motor holder.)

Servo Motor Matches List

(Table 1)

Servo motor size																			
Power(W)	Brand	Type		LL	LL(Brakes)	LA	LE	LZ	LC	LG	LW	RH	W	LR	S	LB	M	QK	QL
100W	Panasonic	MSMD012G1□	V:With brake U:No brake	92	122	45	3	3.4	38	6	14	6.2	3h9	25	8h6	30h7	M3x6L	-	-
	Delta	ECMA-C20401□S	S:With brake R:No brake	100.6	136.6	46	2.5	4.5	40	5	16	6.2	3	25	8h6	30h7	M3x8L	-	-
	Mitsubishi	HC-KFS12□K	B:With brake □:No brake	86.5	124.5	46	2.5	4.5	42	5	-	-	-	25	8h6	30h7	-	-	-

□ Stand for empty

Max. Payload Diameters Table

(Unit : mm)

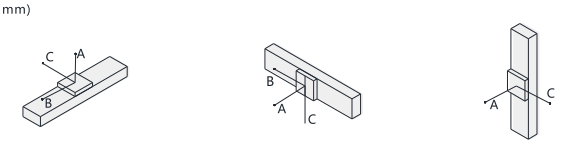

Horizontal installation		A	B	C
Lead 5	4kg	515	58	135
	7kg	340	26	62
Lead 10	3kg	433	87	180
	5kg	233	33	75

Wall installation		A	B	C
Lead 5	4kg	107	24	380
	7kg	31	0	195
Lead 10	3kg	149	54	376
	5kg	50	1	148

Vertical installation		A	C
Lead 5	3kg	56	57
Lead 10	1.5kg	125	125

Max. Static Torque Table

(Unit : N.m)

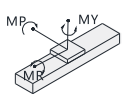

Maximum static torque	
MY	16
MP	20
MR	19

BA: Basis

Unit (mm)

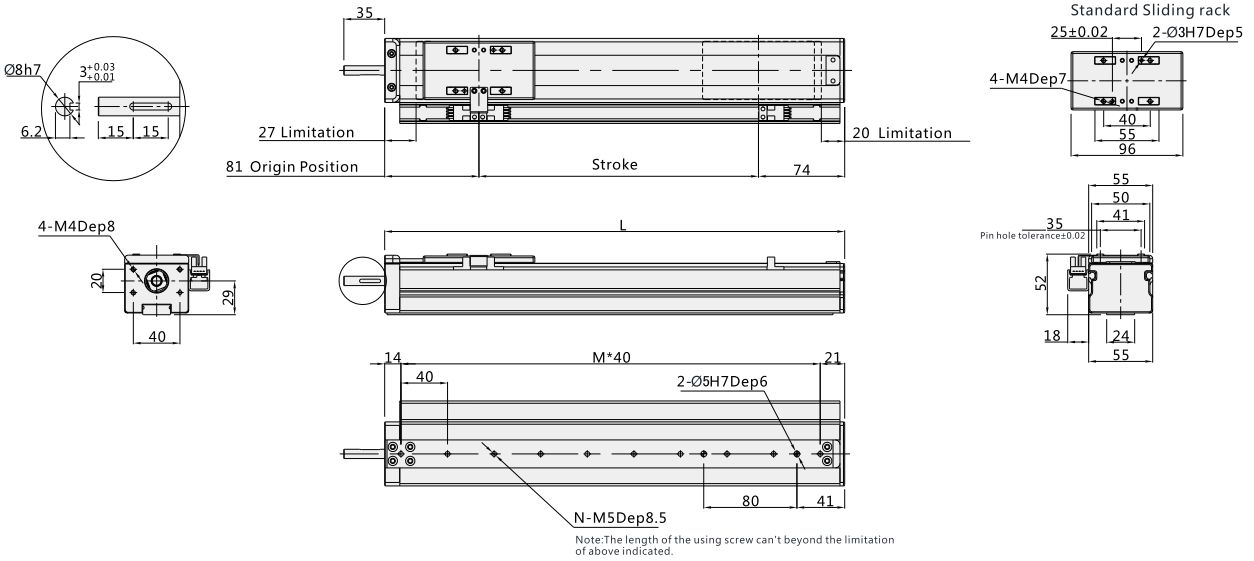

Note: Not including motor weight. *In case special stroke please contact technical services.

Working Stroke	80	120	160	200	240	280	320	360	400	440	480	520	560	600
L	235	275	315	355	395	435	475	515	555	595	635	675	715	755
M	5	6	7	8	9	10	11	12	13	14	15	16	17	18
N	6	7	8	9	10	11	12	13	14	15	16	17	18	19
Weight KG	2.06	2.14	2.22	2.3	2.38	2.46	2.54	2.62	2.7	2.78	2.86	2.94	3.32	3.1

*Products with color ▭ are available stock and short lead time.

BC: External

Unit (mm)

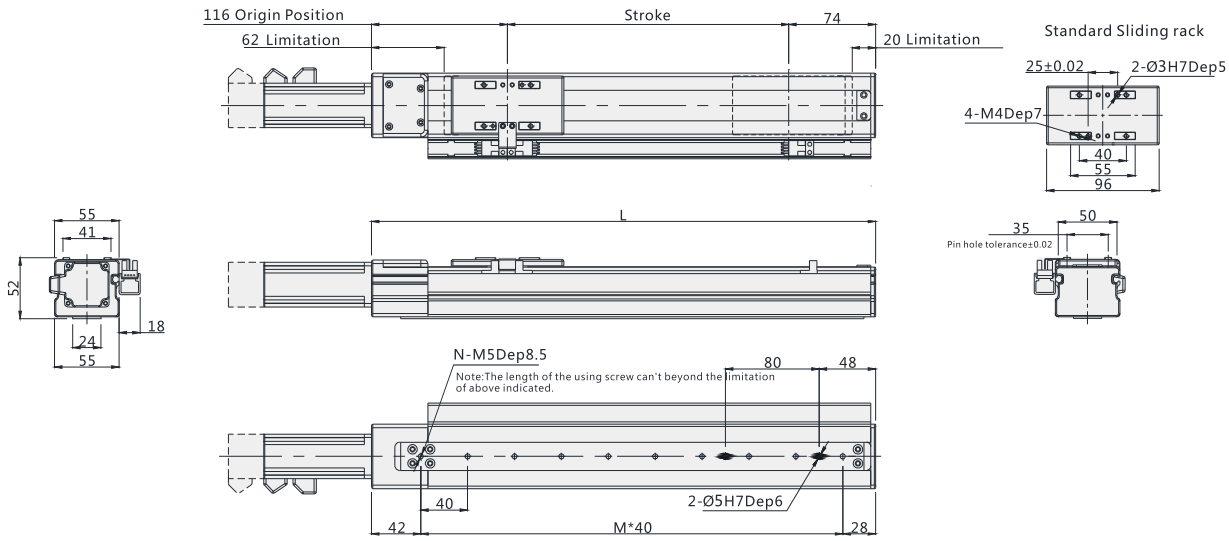

Note: Not including motor weight , in case special stroke please contact technical services. .

Working Stroke	80	120	160	200	240	280	320	360	400	440	480	520	560	600
L	270	310	350	390	430	470	510	550	590	630	670	710	750	790
M	5	6	7	8	9	10	11	12	13	14	15	16	17	18
N	6	7	8	9	10	11	12	13	14	15	16	17	18	19
Weight KG	2.06	2.14	2.22	2.3	2.38	2.46	2.54	2.62	2.7	2.78	2.86	2.94	3.32	3.1

*Products with color ▭ are available stock and short lead time.

BL: Left Side

Unit (mm)

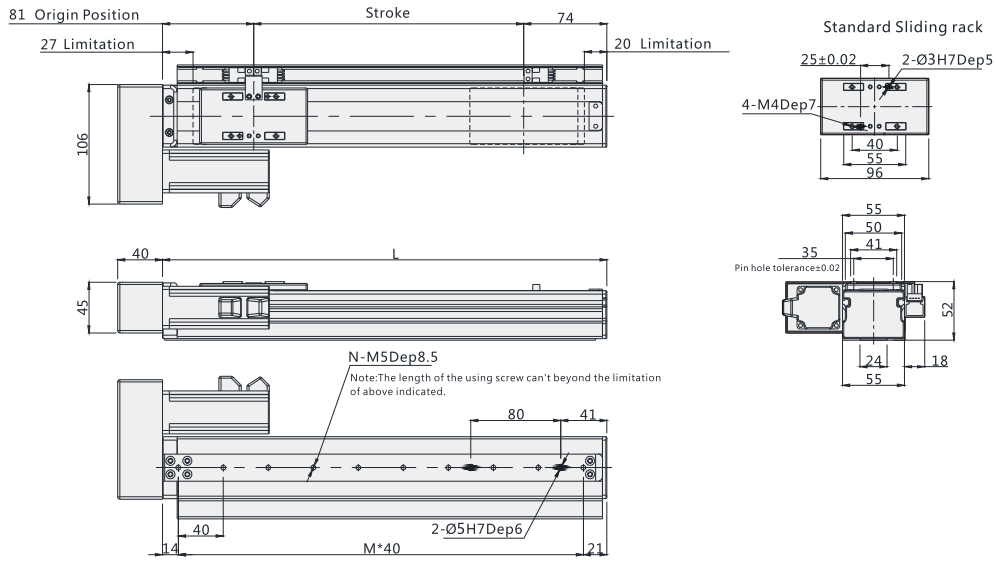

Note: Not including motor weight , in case special stroke please contact technical services. .

Working Stroke	80	120	160	200	240	280	320	360	400	440	480	520	560	600
L	235	275	315	355	395	435	475	515	555	595	635	675	715	755
M	5	6	7	8	9	10	11	12	13	14	15	16	17	18
N	6	7	8	9	10	11	12	13	14	15	16	17	18	19
Weight KG	2.06	2.14	2.22	2.3	2.38	2.46	2.54	2.62	2.7	2.78	2.86	2.94	3.32	3.1

*Products with color are available stock and short lead time.

BR: Right Side

Unit (mm)

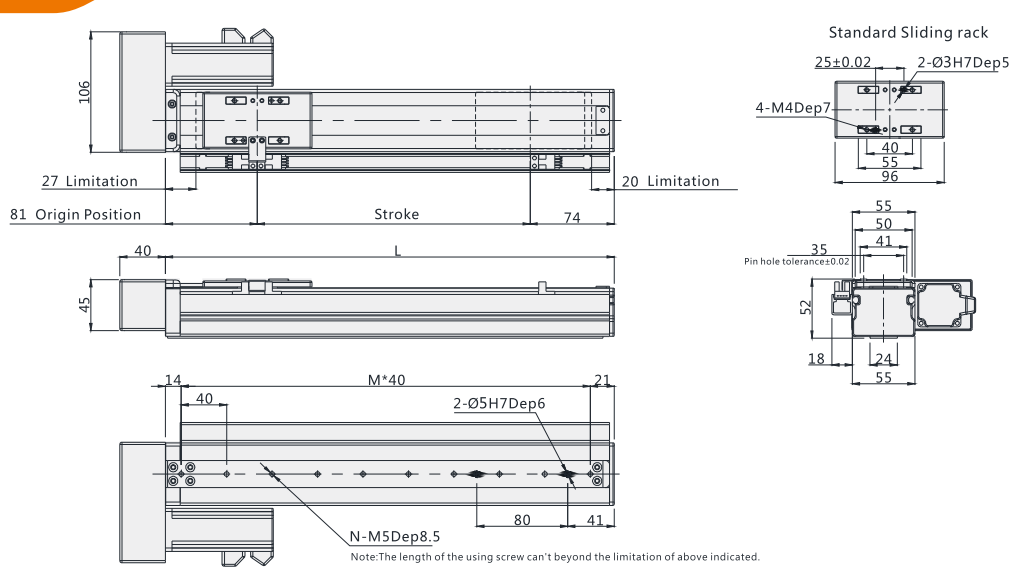

Note: Not including motor weight , in case special stroke please contact technical services. .

Working Stroke	80	120	160	200	240	280	320	360	400	440	480	520	560	600
L	235	275	315	355	395	435	475	515	555	595	635	675	715	755
M	5	6	7	8	9	10	11	12	13	14	15	16	17	18
N	6	7	8	9	10	11	12	13	14	15	16	17	18	19
Weight KG	2.06	2.14	2.22	2.3	2.38	2.46	2.54	2.62	2.7	2.78	2.86	2.94	3.32	3.1

*Products with color are available stock and short lead time.

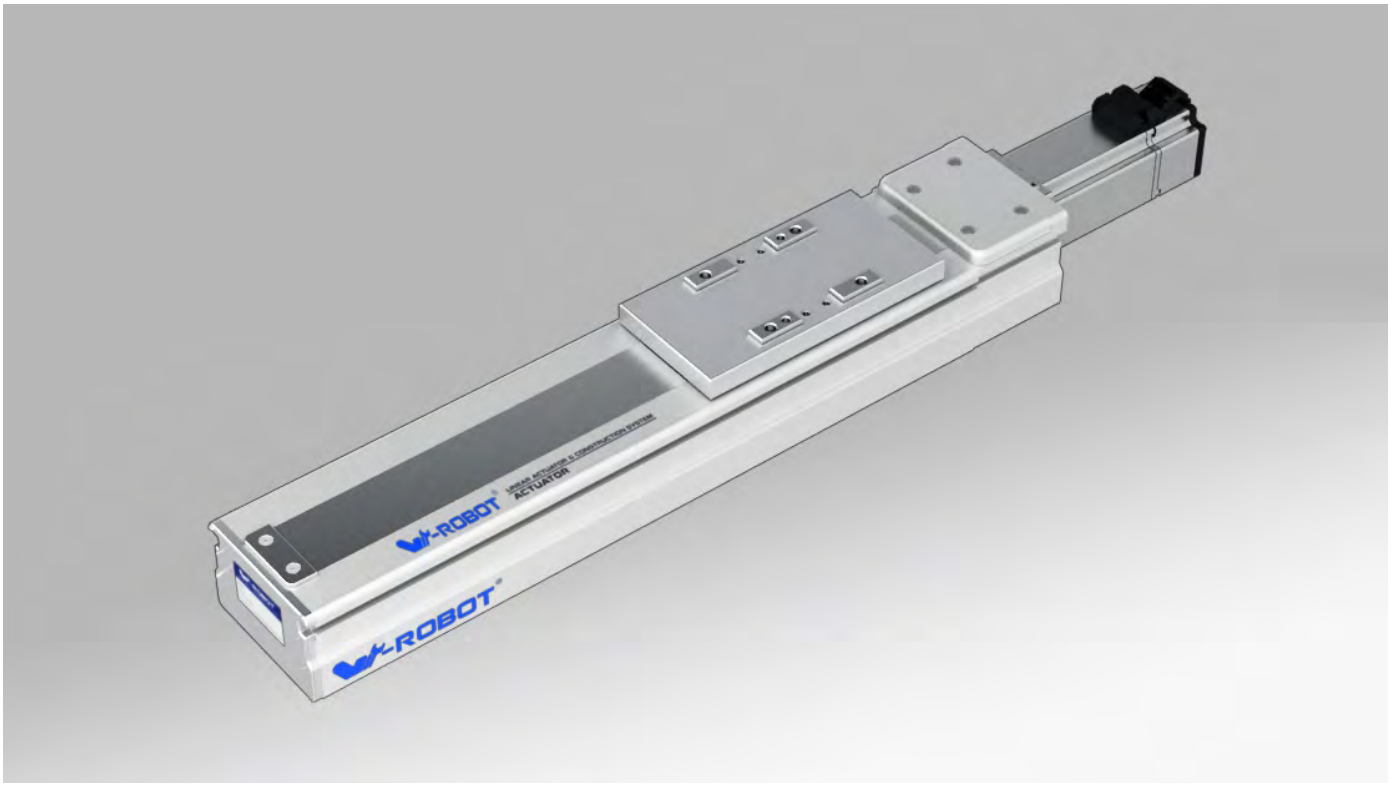

Motor direction

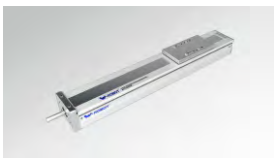

BA

BC

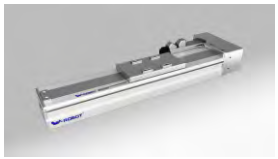

BL

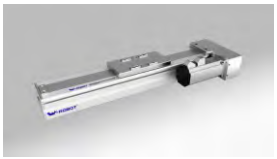

BR

Guide for Model Selection

VT6 — L10 — P — S80 — BC — ZP10B — C3 — ____

Base Style	
VT	Fully-enclosed
6	Body width65

Ball Screw Lead	
L5	5mm
L10	10mm

Accuracy class	
P	High precision
C	Common precision

Stroke(mm)
80-600

Motor way	
BC	External
BR	Right Side
BL	Left Side

Motor Type	
P	Panasonic
T	Delta
W	W-Robot
* For Z: Motor is from clients	

Motor power	
10	100W
57	57-Ø8
	57-Ø6.35

Brakes	
No	No brake
B	With brake

Original Sensor position	
External	
C	Motor side
D	Oppsite motor side
E	No

Sensor switch	
External	
2	2pcs
3	3pcs
No sensor	

Sensor type	
No	NPN
P	PNP

Non-standard, d.c.,	
No	Standard type
BL1	Detailed information please see page 032
B2	
D01	
U01	
UD01	
H01	
HU01	
HD01	
HUD01	
M01	
S01	

Specification

Motor power AC (W)		100W	
BallScrewØ		(C7)	12
		(C5)	12
Repeatability		(C7)	±0.01
		(C5)	±0.006
BallScrew Lead(mm)		5	10
MaximumSpeed(mm/sec) 3000 Motor Speed(rpm/mim)		250	500
Maximum Payload(kg)	Horizontal	30	15
	Vertical	10	5
RatedThrust(N)		330	165
Linear Guide (mm)		42x9.5 -1	
Coupling (mm) (Motor side) x (Ball Screw Side)		8x8	
Motor Output		100W	
Home Sensor		Outside EE-SX672(NPN) EE-SX672P(PNP)	
		Outside Guide EE-SX674(NPN) EE-SX674P(PNP)	

Wiring drawing of inductor(original point and endpoint)

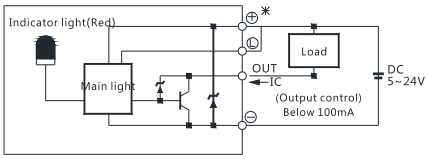

(Figure 1)

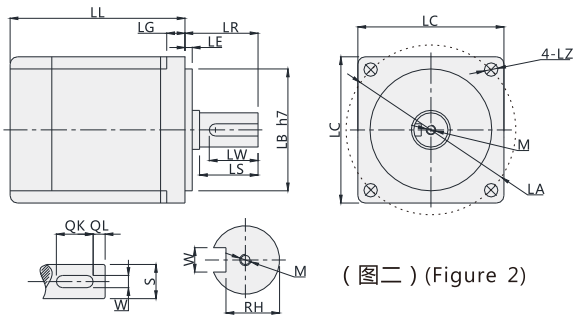

(图二) (Figure 2)

* Above repeatability is within strok 300mm,if logner travel needed,it willbe lower.In case stroke over 500 will lead to swing of ball screw,please slow down the speed 15%.Please note figure 2 motor size is same with table 1, or needed to replace coupler and motor holder.)

Servo Motor Matches List

(Table 1)

Servo motor size																			
Power(W)	Brand	Type		LL	LL(Brakes)	LA	LE	LZ	LC	LG	LW	RH	W	LR	S	LB	M	QK	QL
100W	Panasonic	MSMD012G1□	V:With brake U:No brake	92	122	45	3	3.4	38	6	14	6.2	3h9	25	8h6	30h7	M3x6L	-	-
	Delta	ECMA-C20401□S	S:With brake R:No brake	100.6	136.6	46	2.5	4.5	40	5	16	6.2	3	25	8h6	30h7	M3x8L	-	-
	Mitsubishi	HC-KFS12□K	B:With brake □:No brake	86.5	124.5	46	2.5	4.5	42	5	-	-	-	25	8h6	30h7	-	-	-

□ Stand for empty

Max. Payload Diameters Table

(Unit : mm)

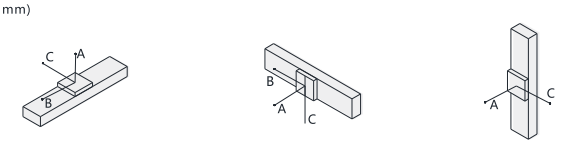

Horizontal installation		A	B	C
Lead 5	10kg	374	33	109
	30kg	159	0	25
Lead 10	3kg	642	125	335
	8kg	273	41	121
	15kg	216	24	77

Wall installation		A	B	C
Lead 5	5kg	204	45	530
	10kg	72	0	245
	30kg	0	0	0
Lead 10	3kg	293	96	510
	8kg	89	14	210
	15kg	43	0	130

Vertical installation		A	C
Lead 5	2kg	171	172
	4kg	73	74
	10kg	23	26
Lead 10	1kg	335	352
	2kg	165	165
	5kg	70	72

Max. Static Torque Table

(Unit : N.m)

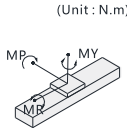

Maximum static torque	
MY	35
MP	40
MR	50

BA: Basis

Unit (mm)

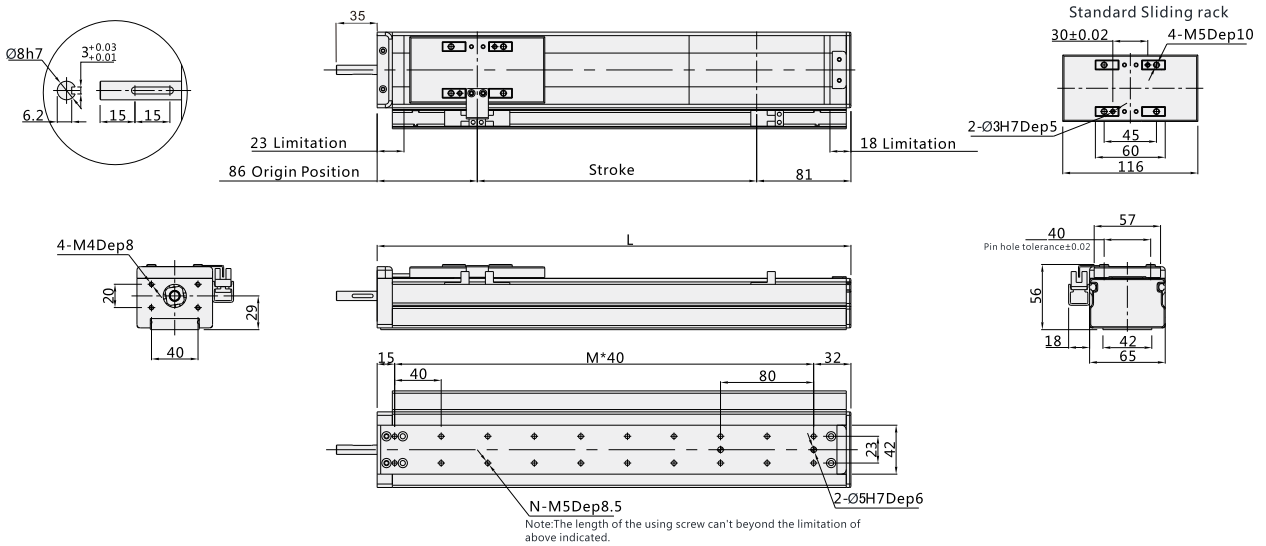

Note: Not including motor weight.
*In case special stroke please contact technical services.

Working Stroke	80	120	160	200	240	280	320	360	400	440	480	520	560	600
L	247	287	327	367	407	447	487	527	567	607	647	687	727	767
M	5	6	7	8	9	10	11	12	13	14	15	16	17	18
N	12	14	16	18	20	22	24	26	28	30	32	34	36	38
Weight KG	2.52	2.68	2.84	3	3.16	3.32	3.48	3.64	3.8	3.96	4.12	4.28	4.44	4.6

*Products with color ▭ are available stock and short lead time.

BC: External

Unit (mm)

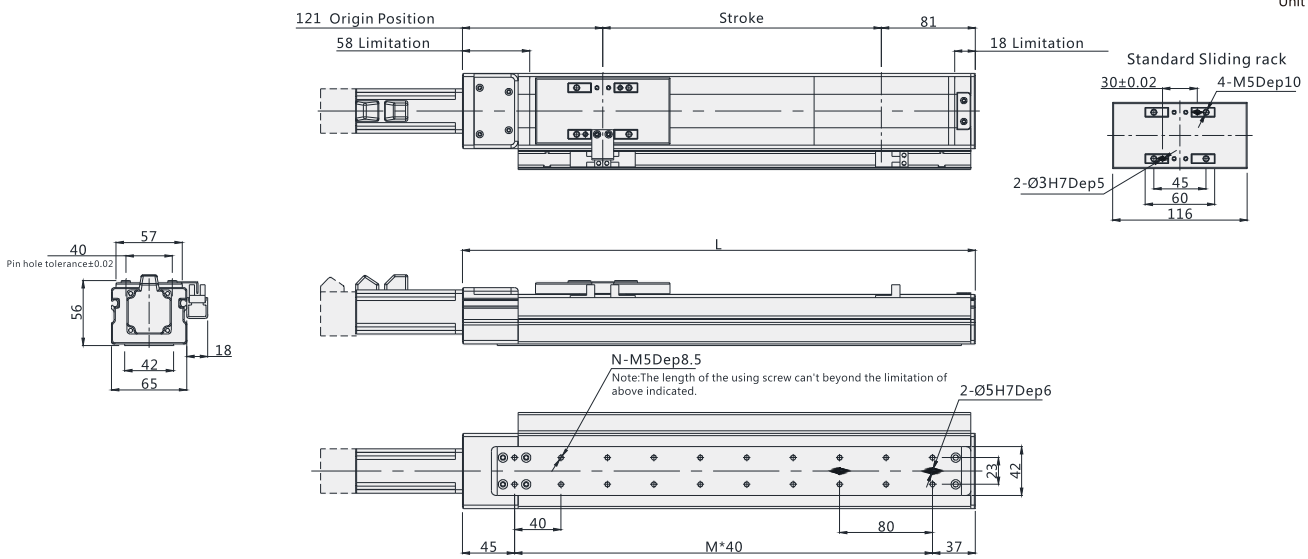

Note: Not including motor weight , in case special stroke please contact technical services. .

Working Stroke	80	120	160	200	240	280	320	360	400	440	480	520	560	600
L	282	322	362	402	442	482	522	562	602	642	682	722	762	802
M	5	6	7	8	9	10	11	12	13	14	15	16	17	18
N	12	14	16	18	20	22	24	26	28	30	32	34	36	38
Weight KG	2.52	2.68	2.84	3	3.16	3.32	3.48	3.64	3.8	3.96	4.12	4.28	4.44	4.6

*Products with color ▭ are available stock and short lead time.

BL: Left Side

Unit (mm)

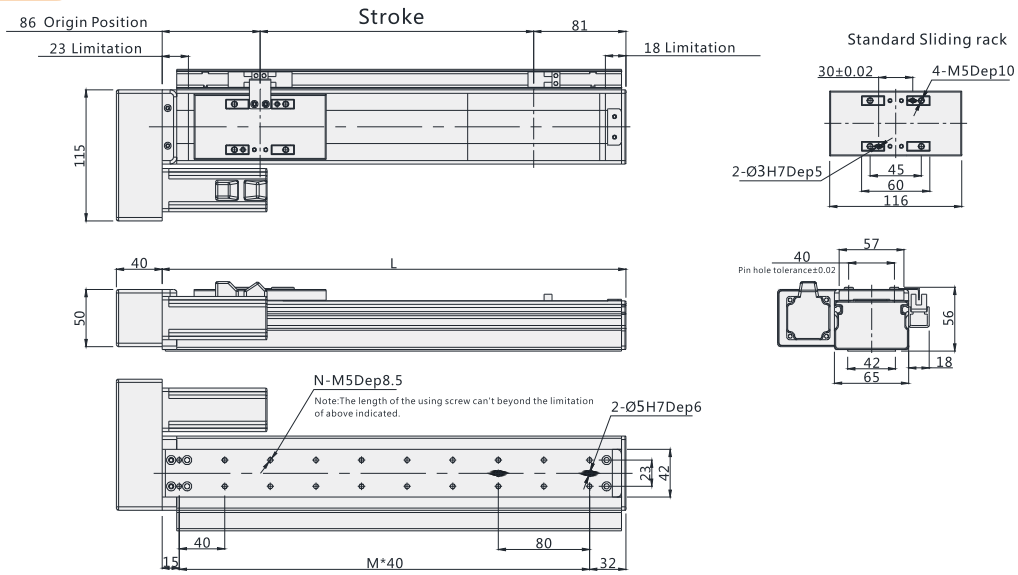

Note: Not including motor weight , in case special stroke please contact technical services. .

Working Stroke	80	120	160	200	240	280	320	360	400	440	480	520	560	600
L	247	287	327	367	407	447	487	527	567	607	647	687	727	767
M	5	6	7	8	9	10	11	12	13	14	15	16	17	18
N	12	14	16	18	20	22	24	26	28	30	32	34	36	38
Weight KG	2.52	2.68	2.84	3	3.16	3.32	3.48	3.64	3.8	3.96	4.12	4.28	4.44	4.6

*Products with color are available stock and short lead time.

BR: Right Side

Unit (mm)

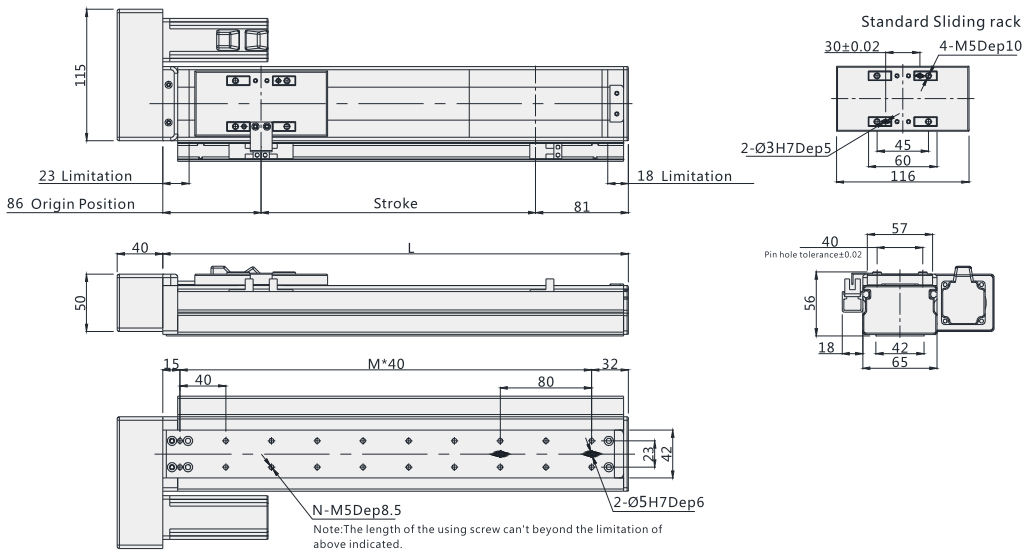

Note: Not including motor weight , in case special stroke please contact technical services. .

Working Stroke	80	120	160	200	240	280	320	360	400	440	480	520	560	600
L	247	287	327	367	407	447	487	527	567	607	647	687	727	767
M	5	6	7	8	9	10	11	12	13	14	15	16	17	18
N	12	14	16	18	20	22	24	26	28	30	32	34	36	38
Weight KG	2.52	2.68	2.84	3	3.16	3.32	3.48	3.64	3.8	3.96	4.12	4.28	4.44	4.6

*Products with color are available stock and short lead time.

Motor direction

BA

BC

BL

BR

Guide for Model Selection

VF6 — L16 — P — S100 — BC — ZP10B — C3 — ___

Base Style	
V	Vseries
F	Semiclosed with Frame Ball Screw Drive
6	Body width60

Ball Screw Lead	
L5	5mm
L10	10mm
L16	16mm
L20	20mm

Accuracy class	
P	High precision
C	Common precision

Stroke(mm)
100-1000

Motor way	
BA	Basis
BC	External
BR	Right Side
BL	Left Side

Motor Type	
P	Panasonic
M	Mitsubishi
Y	Yaskawa
T	Delta
W	W-Robot

* For Z: Motor is from clients

Motor power	
10	100W
20	200W
40	400W
57	57-Ø8
	57-Ø6.35

Brakes	
No	No brake
B	With brake

Original Sensor position	
External	
C	Motor side
D	Oppsite motor side
E	No

Sensor switch	
External	
2	2pcs
3	3pcs
No sensor	

Sensor type	
No	NPN
P	PNP

Non-standard, d.c.,	
No	Standard type
BL1	Detailed information please see page 032
B2	
D01	
U01	
UD01	
H01	
HU01	
HD01	
HUD01	
M01	
S01	

Specification

Motor power AC (W)		100W/200W/400W			
BallScrewØ		(C7)	16		
		(C5)	16		
Repeatability		(C7)	±0.01		
		(C5)	±0.006		
BallScrew Lead(mm)		5	10	16	20
MaximumSpeed(mm/sec) 3000 Motor Speed(rpm/mim)		250	500	800	1000
Maximum Payload(kg)	Horizontal	18/20/25	14/16/20	11/13/16	5/7/8
	Vertical	8/9/10	5/6/8	2/3/4	2
RatedThrust(N)		330/683/1388	165/341/694	100/213/433	85/174/347
Linear Guide (mm)		24x8.5 -1			
Coupling (mm) (Motor side) x (Ball Screw Side)		8x10	11x10	14x10	14x10
Motor Output		100W	200W		400W
Home Sensor		Outside EE-SX672(NPN) EE-SX672P(PNP)			
		Outside Guide EE-SX674(NPN) EE-SX674P(PNP)			

Wiring drawing of inductor(original point and endpoint)

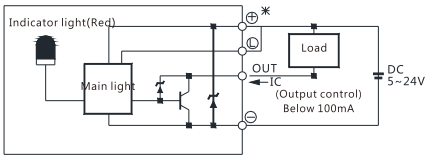

(Figure 1)

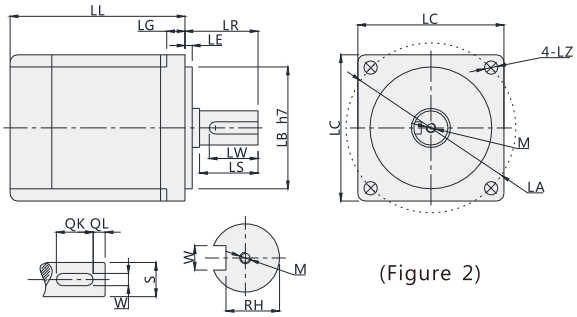

(Figure 2)

* Above repeatability is within strok 300mm,if logner travel needed,it willbe lower.In case stroke over 650 will lead to swing of ball screw,please slow down the speed 15%.Please note figure 2 motor size is same with table 1, or needed to replace coupler and motor holder.)

Servo Motor Matches List

(Table 1)

Servo motor size																			
Power(W)	Brand	Type		LL	LL(Brakes)	LA	LE	LZ	LC	LG	LW	RH	W	LR	S	LB	M	QK	QL
100W	Panasonic	MSMD012G1□	V:With brake U:No brake	92	122	45	3	3.4	38	6	14	6.2	3h9	25	8h6	30h7	M3x6L	-	-
	Delta	ECMA-C20401□S	S:With brake R:No brake	100.6	136.6	46	2.5	4.5	40	5	16	6.2	3	25	8h6	30h7	M3x8L	-	-
	Mitsubishi	HC-KFS12□K	B:With brake □:No brake	86.5	124.5	46	2.5	4.5	42	5	-	-	-	25	8h6	30h7	-	-	-
200W	Panasonic	MSMJ022G1□	V:With brake U:No brake	79.5	115.5	70	3	4.5	60	6.5	20	8.5	4h9	30	11h6	50h7	M4x8L	-	-
	Delta	ECMA-C20602□S	S:With brake R:No brake	105.5	141.5	70	3	5.5	60	7.5	20	11	5	30	14h6	50h7	M4x15L	-	-
	Mitsubishi	HC-KFS23□K	B:With brake □:No brake	99.5	131.5	70	3	5.8	62	7	-	-	-	30	14h6	50h7	-	-	-
400W	Panasonic	MSMJ042G1□	V:With brake U:No brake	99	135	70	3	4.5	60	6.5	20	11	5h9	30	14h6	50h7	M5x10L	-	-
	Delta	ECMA-C20604□S	S:With brake R:No brake	130.7	166.6	70	3	5.5	60	7.5	20	11	5	30	14h6	50h7	M4x15L	-	-
		ECMA-C20804□S	S:With brake R:No brake	112.3	152.8	90	3	6.6	80	8	20	11	5	35	14h6	70h7	M4x15L	-	-
	Mitsubishi	HC-KFS43□K	B:With brake □:No brake	124.5	165.5	70	3	5.8	62	7	-	-	-	30	14h6	50h7	-	-	-

□ Stand for empty

Max. Payload Diameters Table

(Unit : mm)

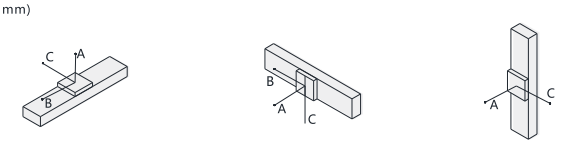

Max. Static Torque Table

(Unit : N.m)

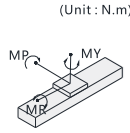

Horizontal installation		A	B	C
Lead 5	10kg	374	33	109
	18kg	159	0	25
	-	-	-	-
Lead 10	3kg	642	125	335
	8kg	273	41	121
	14kg	216	24	77

Wall installation		A	B	C
Lead 5	5kg	204	45	530
	10kg	72	0	245
	18kg	0	0	0
Lead 10	3kg	293	96	510
	8kg	89	14	210
	14kg	43	0	130

Vertical installation		A	C
Lead 5	2kg	171	172
	4kg	73	74
	8kg	23	26
Lead 10	1kg	335	352
	2kg	165	165
	5kg	70	72

Maximum static torque	
MY	70
MP	80
MR	75

BA: Basis

Unit (mm)

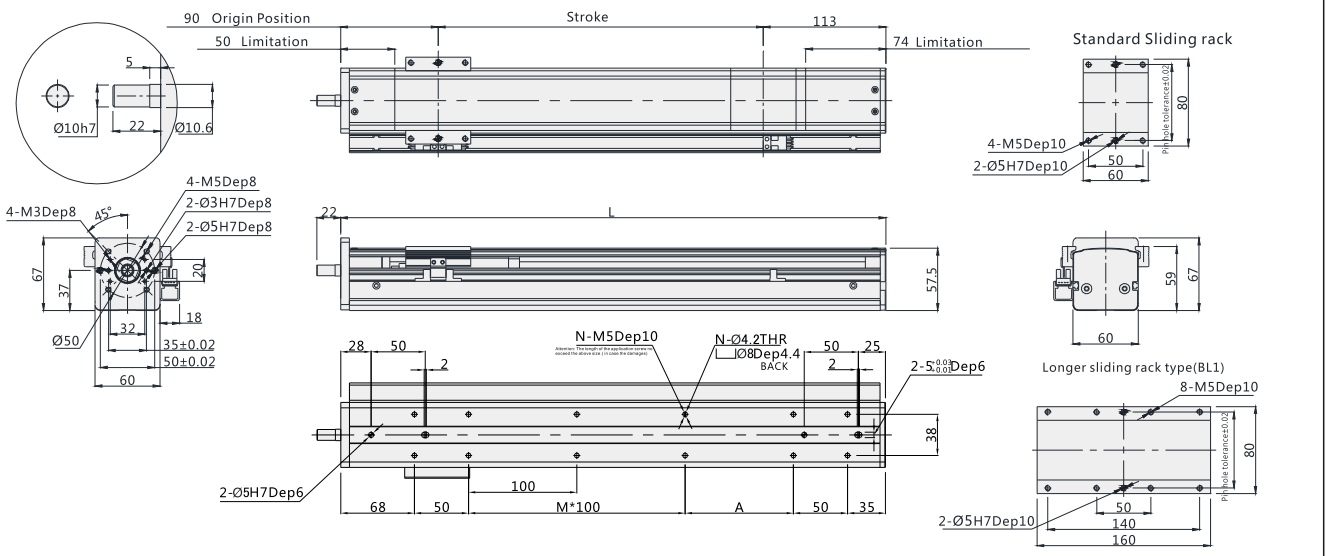

Note:Increasing the length of sliding rack will cause the changing of stroke and original sensor position.

Note: Not including motor weight , in case special stroke please contact technical services. .

Working Stroke	100	150	200	250	300	350	400	450	500	550	600	650	700	750	800	850	900	950	1000
L	303	353	403	453	503	553	603	653	703	753	803	853	903	953	1003	1053	1103	1153	1203
M	0	1	1	2	2	3	3	4	4	5	5	6	6	7	7	8	8	9	9
N	8	10	10	12	12	14	14	16	16	18	18	20	20	22	22	24	24	26	26
A	100	50	100	50	100	50	100	50	100	50	100	50	100	50	100	50	100	50	100
Weight KG	2.5	2.8	3.1	3.4	3.7	4	4.3	4.6	4.9	5.2	5.5	5.8	6.1	6.4	6.7	7	7.3	7.6	7.9

*Products with color ▭ are available stock and short lead time.

BC: External

Unit (mm)

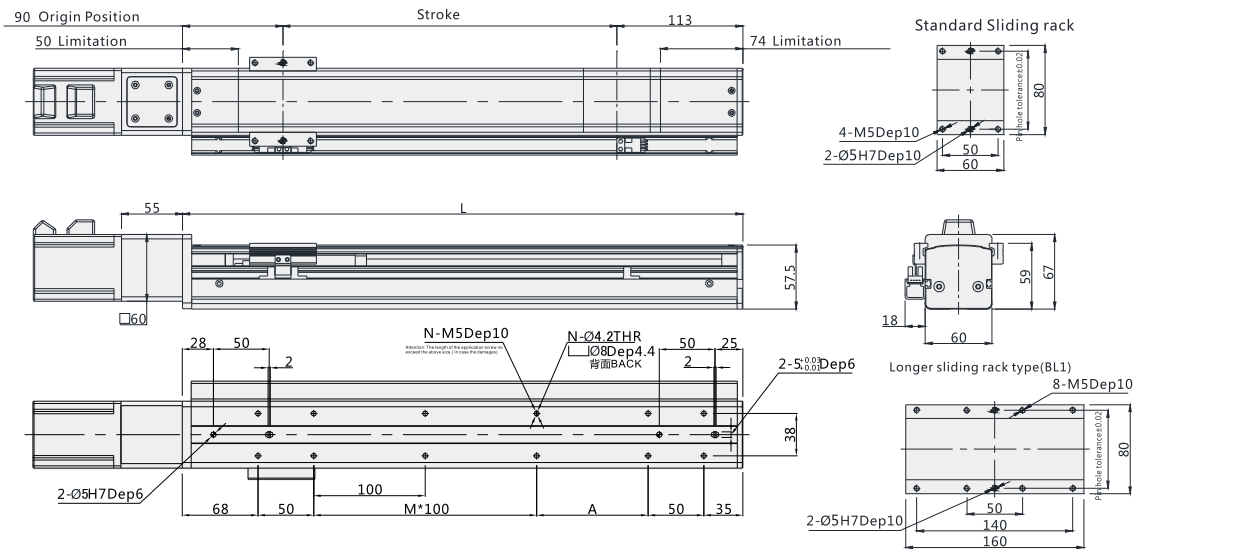

Note:Increasing the length of sliding rack will cause the changing of stroke and original sensor position.

Note: Not including motor weight , in case special stroke please contact technical services. .

Working Stroke	100	150	200	250	300	350	400	450	500	550	600	650	700	750	800	850	900	950	1000
L	303	353	403	453	503	553	603	653	703	753	803	853	903	953	1003	1053	1103	1153	1203
M	0	1	1	2	2	3	3	4	4	5	5	6	6	7	7	8	8	9	9
N	8	10	10	12	12	14	14	16	16	18	18	20	20	22	22	24	24	26	26
A	100	50	100	50	100	50	100	50	100	50	100	50	100	50	100	50	100	50	100
Weight KG	2.8	3.1	3.4	3.7	4	4.3	4.6	4.9	5.2	5.5	5.8	6.1	6.4	6.7	7	7.3	7.6	7.9	8.2

*Products with color ▭ are available stock and short lead time.

BL: Left Side

Unit (mm)

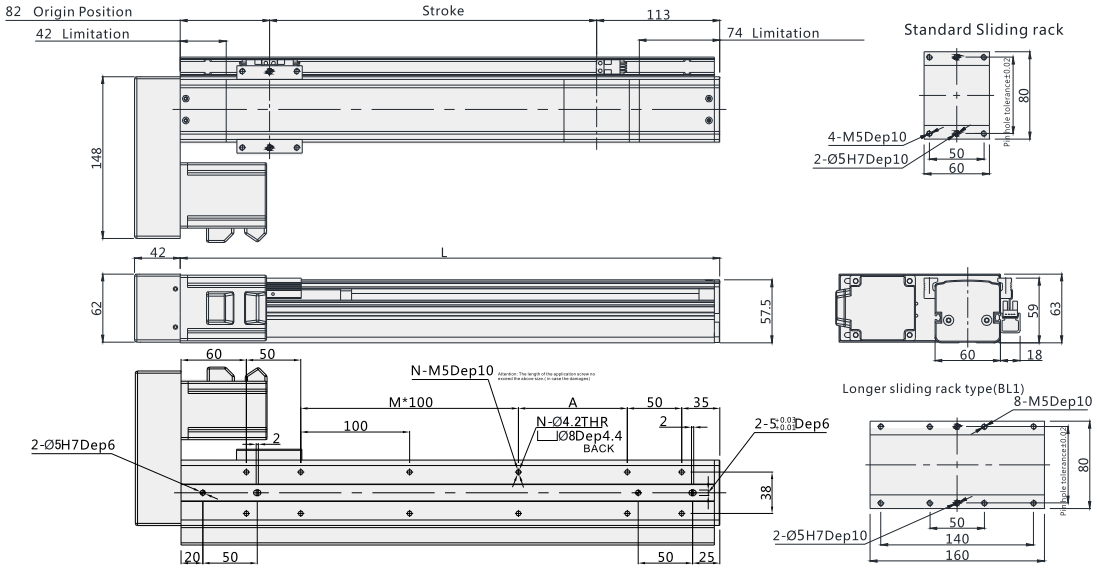

Note: Not including motor weight , in case special stroke please contact technical services. .

Working Stroke	100	150	200	250	300	350	400	450	500	550	600	650	700	750	800	850	900	950	1000
L	295	345	395	445	495	545	595	645	695	745	795	845	895	945	995	1045	1095	1145	1195
M	0	1	1	2	2	3	3	4	4	5	5	6	6	7	7	8	8	9	9
N	8	10	10	12	12	14	14	16	16	18	18	20	20	22	22	24	24	26	26
A	100	50	100	50	100	50	100	50	100	50	100	50	100	50	100	50	100	50	100
Weight KG	3.2	3.5	3.8	4.1	4.4	4.7	5	5.3	5.6	5.9	6.2	6.5	6.8	7.1	7.4	7.7	8	8.3	8.6

*Products with color ▭ are available stock and short lead time.

BR: Right Side

Unit (mm)

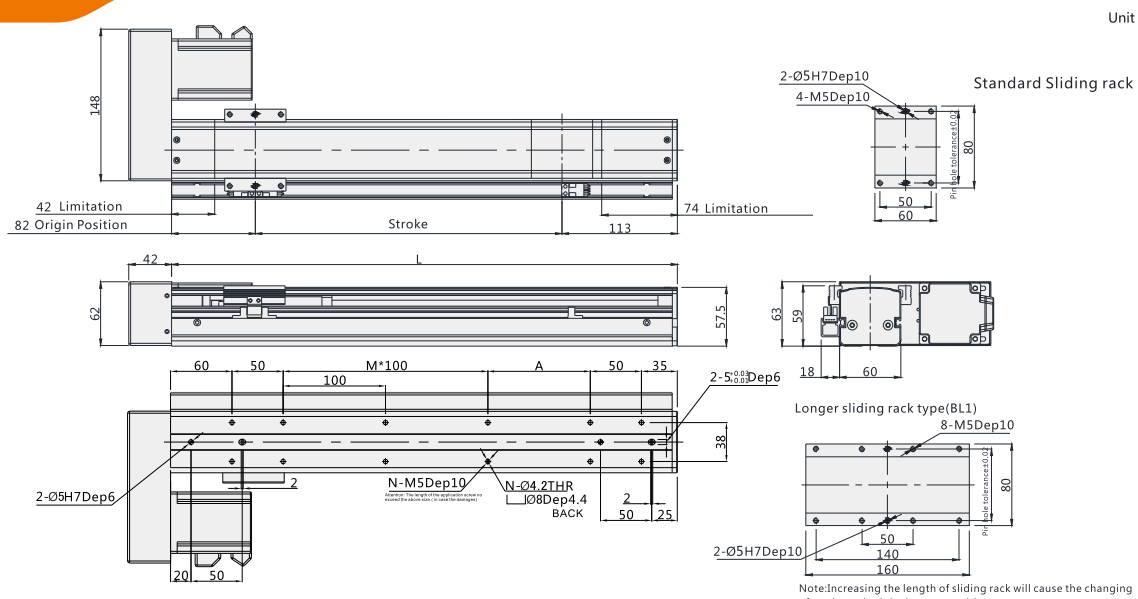

Note:Increasing the length of sliding rack will cause the changing of stroke and original sensor position.

Note: Not including motor weight , in case special stroke please contact technical services. .

Working Stroke	100	150	200	250	300	350	400	450	500	550	600	650	700	750	800	850	900	950	1000
L	295	345	395	445	495	545	595	645	695	745	795	845	895	945	995	1045	1095	1145	1195
M	0	1	1	2	2	3	3	4	4	5	5	6	6	7	7	8	8	9	9
N	8	10	10	12	12	14	14	16	16	18	18	20	20	22	22	24	24	26	26
A	100	50	100	50	100	50	100	50	100	50	100	50	100	50	100	50	100	50	100
Weight KG	3.2	3.5	3.8	4.1	4.4	4.7	5	5.3	5.6	5.9	6.2	6.5	6.8	7.1	7.4	7.7	8	8.3	8.6

*Products with color ▭ are available stock and short lead time.

VF8

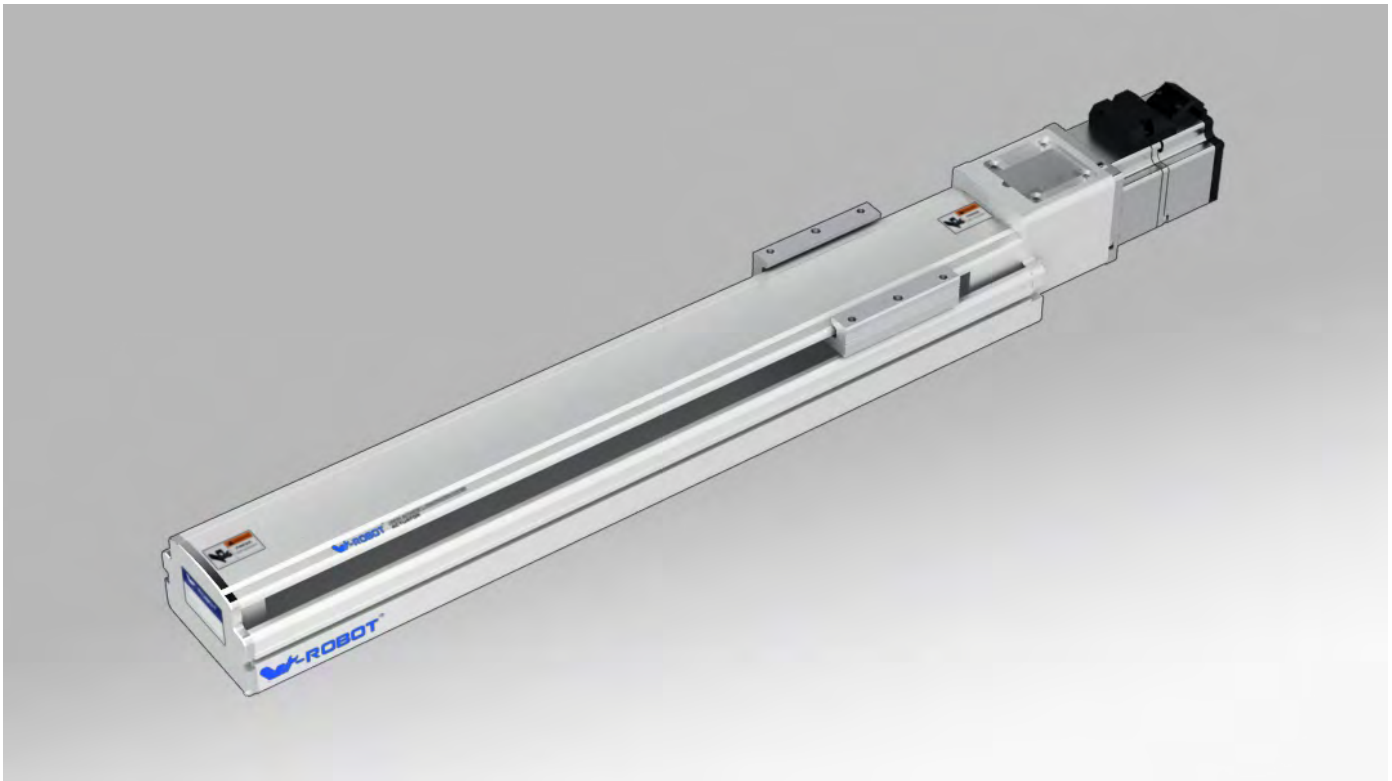

Motor direction

BA

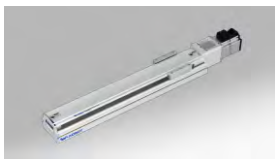

BC

BL

BR

Guide for Model Selection

VF8 — L16 — P — S100 — BC — ZP10B — C3 — ____

Base Style	
V	Vseries
F	Semiclosed with Frame Ball Screw Drive
8	Body width80

Ball Screw Lead	
L5	5mm
L10	10mm
L16	16mm
L20	20mm

Accuracy class	
P	High precision
C	Common precision

Stroke(mm)
100-1000

Motor way	
BA	Basis
BC	External
BR	Right Side
BL	Left Side

Motor Type	
P	Panasonic
M	Mitsubishi
Y	Yaskawa
T	Delta
W	W-Robot

* For Z: Motor is from clients

Motor power	
10	100W
20	200W
40	400W
57	57-Ø8
	57-Ø6.35

Brakes	
No	No brake
B	With brake

Original Sensor position	
External	
C	Motor side
D	Oppsite motor side
E	No

Sensor switch	
External	
2	2pcs
3	3pcs
No sensor	

Sensor type	
No	NPN
P	PNP

Non-standard, d.c.,	
No	Standard type
BL1	Detailed information please see page 032
B2	
D01	
U01	
UD01	
H01	
HU01	
HD01	
HUD01	
M01	
S01	

Specification

Motor power AC (W)		100W/200W/400W			
BallScrewØ		(C7)	16		
		(C5)	16		
Repeatability		(C7)	±0.01		
		(C5)	±0.006		
BallScrew Lead(mm)		5	10	16	20
MaximumSpeed(mm/sec) 3000 Motor Speed(rpm/mim)		250	500	800	1000
Maximum Payload(kg)	Horizontal	25/30/35	20/25/30	18/22/27	15/17/22
	Vertical	8/10/12	7/9/11	5/7/9	3/5/6
RatedThrust(N)		330/683/1388	165/341/694	100/213/433	85/174/347
Linear Guide (mm)		42x9.5 -1			
Coupling (mm) (Motor side) x (Ball Screw Side)		8x10	11x10	14x10	14x10
Motor Output		100W	200W		400W
Home Sensor		Outside EE-SX672(NPN) EE-SX672P(PNP)			
		Outside Guide EE-SX674(NPN) EE-SX674P(PNP)			

Wiring drawing of inductor(original point and endpoint)

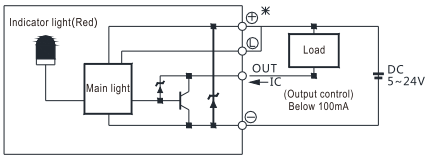

(Figure 1)

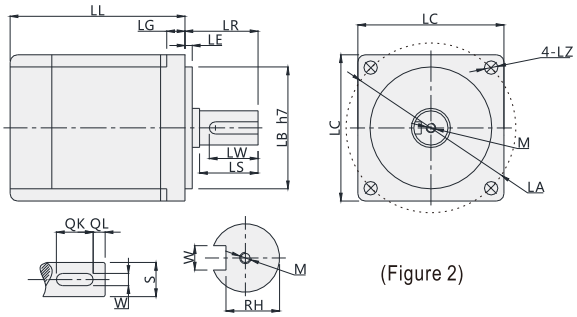

(Figure 2)

* Above repeatability is within strok 300mm,if logner travel needed,it willbe lower.In case stroke over 650 will lead to swing of ball screw,please slow down the speed 15%.Please note figure 2 motor size is same with table 1, or needed to replace coupler and motor holder.)

Servo Motor Matches List

(Table 1)

Servo motor size																			
Power(W)	Brand	Type		LL	LL(Brakes)	LA	LE	LZ	LC	LG	LW	RH	W	LR	S	LB	M	QK	QL
100W	Panasonic	MSMD012G1□	V:With brake U:No brake	92	122	45	3	3.4	38	6	14	6.2	3h9	25	8h6	30h7	M3x6L	-	-
	Delta	ECMA-C20401□S	S:With brake R:No brake	100.6	136.6	46	2.5	4.5	40	5	16	6.2	3	25	8h6	30h7	M3x8L	-	-
	Mitsubishi	HC-KFS12□K	B:With brake □:No brake	86.5	124.5	46	2.5	4.5	42	5	-	-	-	25	8h6	30h7	-	-	-
200W	Panasonic	MSMJ022G1□	V:With brake U:No brake	79.5	115.5	70	3	4.5	60	6.5	20	8.5	4h9	30	11h6	50h7	M4x8L	-	-
	Delta	ECMA-C20602□S	S:With brake R:No brake	105.5	141.5	70	3	5.5	60	7.5	20	11	5	30	14h6	50h7	M4x15L	-	-
	Mitsubishi	HC-KFS23□K	B:With brake □:No brake	99.5	131.5	70	3	5.8	62	7	-	-	-	30	14h6	50h7	-	-	-
400W	Panasonic	MSMJ042G1□	V:With brake U:No brake	99	135	70	3	4.5	60	6.5	20	11	5h9	30	14h6	50h7	M5x10L	-	-
	Delta	ECMA-C20604□S	S:With brake R:No brake	130.7	166.6	70	3	5.5	60	7.5	20	11	5	30	14h6	50h7	M4x15L	-	-
		ECMA-C20804□S	S:With brake R:No brake	112.3	152.8	90	3	6.6	80	8	20	11	5	35	14h6	70h7	M4x15L	-	-
	Mitsubishi	HC-KFS43□K	B:With brake □:No brake	124.5	165.5	70	3	5.8	62	7	-	-	-	30	14h6	50h7	-	-	-

□ Stand for empty

Max. Payload Diameters Table

(Unit : mm)

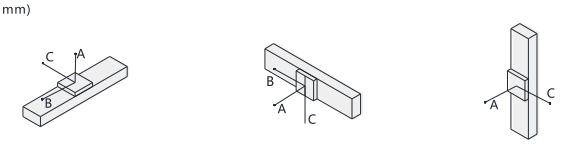

Horizontal installation		A	B	C
Lead 5	15kg	374	33	109
	25kg	159	0	25
	-	-	-	-
Lead 10	4kg	624	125	335
	9kg	273	41	121
	20kg	50	-	-
Lead 16	4kg	737	182	159
	8kg	387	80	97
	18kg	90	30	35

Wall installation		A	B	C
Lead 5	15kg	204	45	530
	25kg	72	0	245
	-	0	0	0
Lead 10	4kg	280	96	500
	9kg	70	10	200
	20kg	30	0	180
Lead 16	4kg	80	30	300
	8kg	15	0	130
	18kg	0	0	0

Vertical installation		A	C
Lead 5	4kg	100	145
	6kg	50	74
	8kg	23	26
Lead 10	3kg	335	350
	5kg	140	160
	7kg	70	72
Lead 16	1kg	372	418
	2kg	166	202
	5kg	113	159

Max. Static Torque Table

(Unit : N.m)

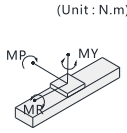

Maximum static torque	
MY	100
MP	100
MR	110

BA: Basis

Unit (mm)

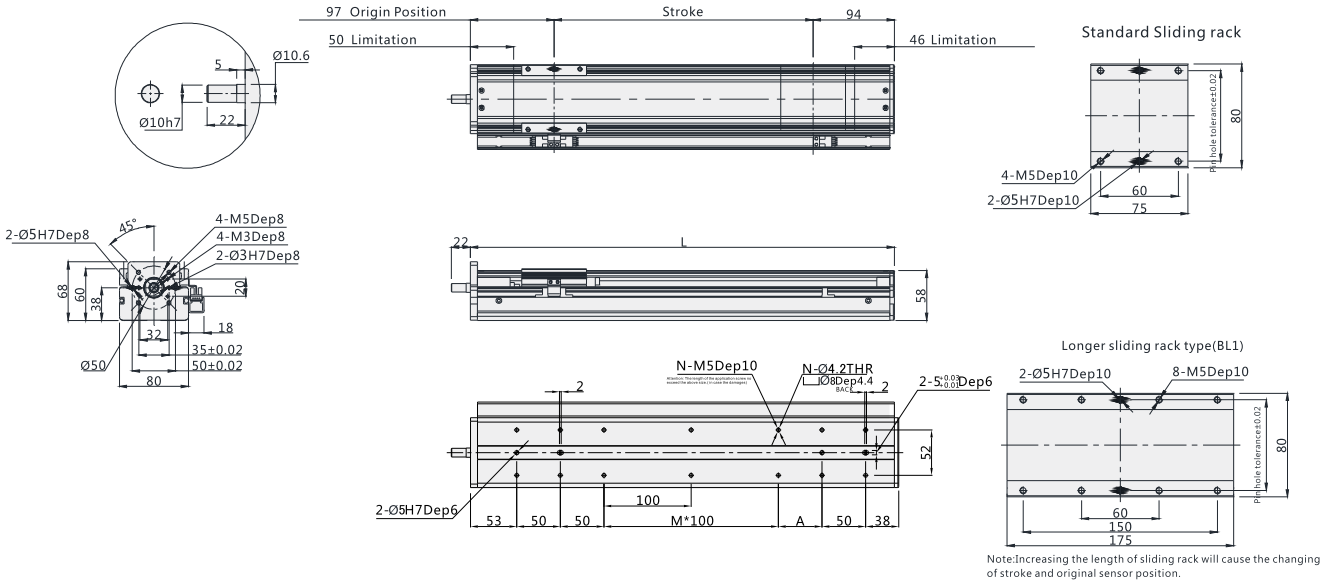

Note:Increasing the length of sliding rack will cause the changing of stroke and original sensor position.

Note: Not including motor weight , in case special stroke please contact technical services. .

Working Stroke	100	150	200	250	300	350	400	450	500	550	600	650	700	750	800	850	900	950	1000
L	291	341	391	441	491	541	591	641	691	741	791	841	891	941	991	1041	1091	1141	1191
M	0	0	1	1	2	2	3	3	4	4	5	5	6	6	7	7	8	8	9
N	10	10	12	12	14	14	16	16	18	18	20	20	22	22	24	24	26	26	28
A	50	100	50	100	50	100	50	100	50	100	50	100	50	100	50	100	50	100	50
Weight KG	3.1	3.5	3.9	4.3	4.7	5.1	5.5	5.9	6.3	6.7	7.1	7.5	7.9	8.3	8.7	9.1	9.5	9.9	10.3

*Products with color are available stock and short lead time.

BC: External

Unit (mm)

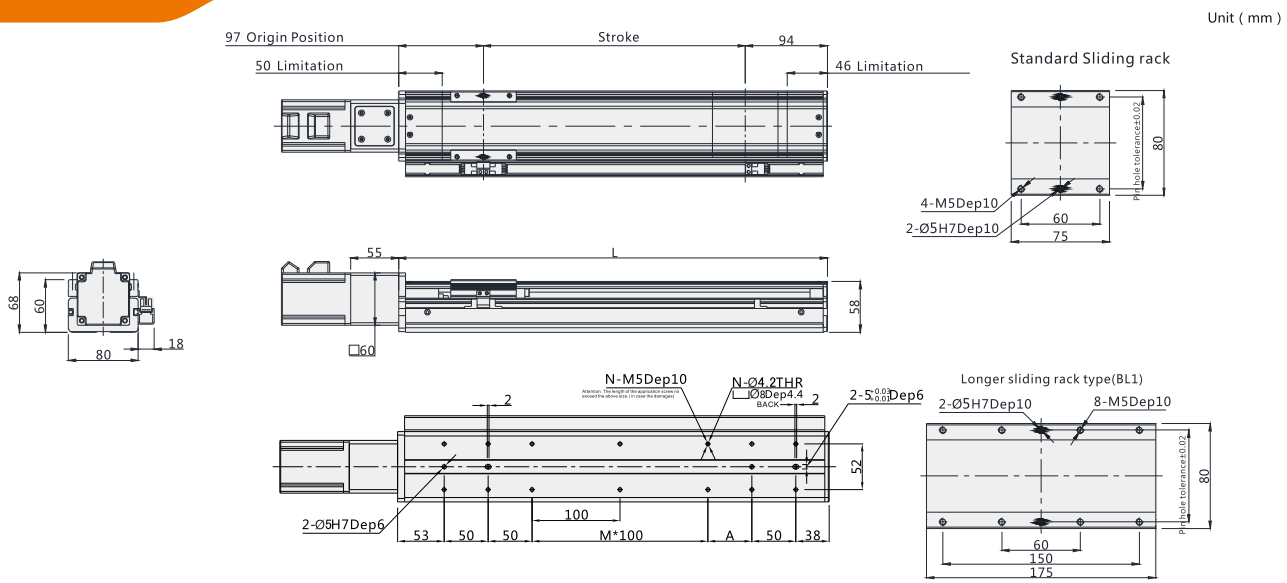

Note:Increasing the length of sliding rack will cause the changing of stroke and original sensor position.

Note: Not including motor weight , in case special stroke please contact technical services. .

Working Stroke	100	150	200	250	300	350	400	450	500	550	600	650	700	750	800	850	900	950	1000
L	291	341	391	441	491	541	591	641	691	741	791	841	891	941	991	1041	1091	1141	1191
M	0	0	1	1	2	2	3	3	4	4	5	5	6	6	7	7	8	8	9
N	10	10	12	12	14	14	16	16	18	18	20	20	22	22	24	24	26	26	28
A	50	100	50	100	50	100	50	100	50	100	50	100	50	100	50	100	50	100	50
Weight KG	3.4	3.8	4.2	4.6	5	5.4	5.8	6.2	6.6	7	7.4	7.8	8.2	8.6	9	9.4	9.8	10.2	10.6

*Products with color are available stock and short lead time.

BL: Left Side

Unit (mm)

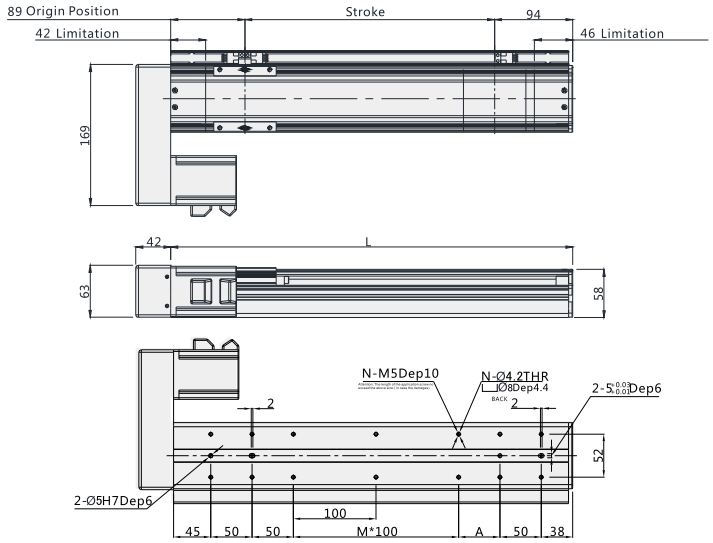

Standard Sliding rack

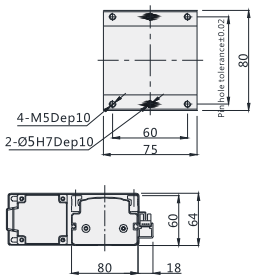

Longer sliding rack type(BL1)

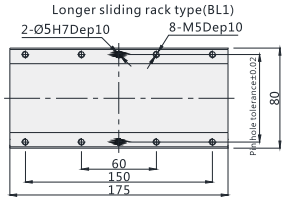

Note:Increasing the length of sliding rack will cause the changing of stroke and original sensor position.

Note: Not including motor weight , in case special stroke please contact technical services. .

Working Stroke	100	150	200	250	300	350	400	450	500	550	600	650	700	750	800	850	900	950	1000
L	283	333	383	433	483	533	583	633	683	733	783	833	883	933	983	1033	1083	1133	1183
M	0	0	1	1	2	2	3	3	4	4	5	5	6	6	7	7	8	8	9
N	10	10	12	12	14	14	16	16	18	18	20	20	22	22	24	24	26	26	28
A	50	100	50	100	50	100	50	100	50	100	50	100	50	100	50	100	50	100	50
Weight KG	4	4.4	4.8	5.2	5.6	6	6.4	6.8	7.2	7.6	8	8.4	8.8	9.2	9.6	10	10.4	10.8	11.2

*Products with color ____ are available stock and short lead time.

BR: Right Side

Unit (mm)

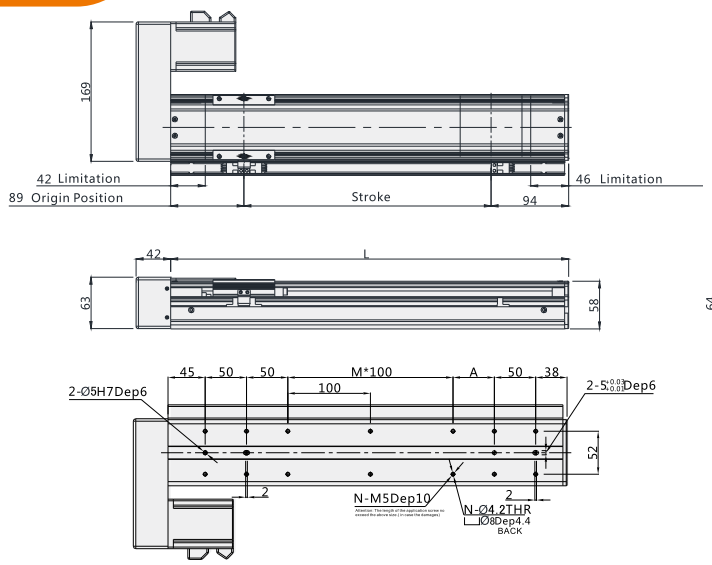

Standard Sliding rack

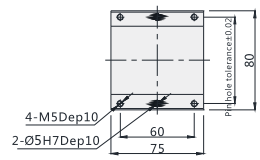

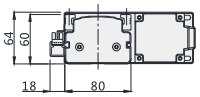

Longer sliding rack type(BL1)

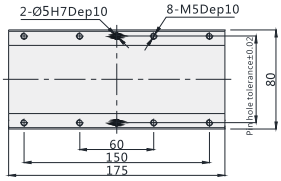

Note:Increasing the length of sliding rack will cause the changing of stroke and original sensor position.

Note: Not including motor weight , in case special stroke please contact technical services. .

Working Stroke	100	150	200	250	300	350	400	450	500	550	600	650	700	750	800	850	900	950	1000
L	283	333	383	433	483	533	583	633	683	733	783	833	883	933	983	1033	1083	1133	1183
M	0	0	1	1	2	2	3	3	4	4	5	5	6	6	7	7	8	8	9
N	10	10	12	12	14	14	16	16	18	18	20	20	22	22	24	24	26	26	28
A	50	100	50	100	50	100	50	100	50	100	50	100	50	100	50	100	50	100	50
Weight KG	4	4.4	4.8	5.2	5.6	6	6.4	6.8	7.2	7.6	8	8.4	8.8	9.2	9.6	10	10.4	10.8	11.2

*Products with color ____ are available stock and short lead time.

VF10

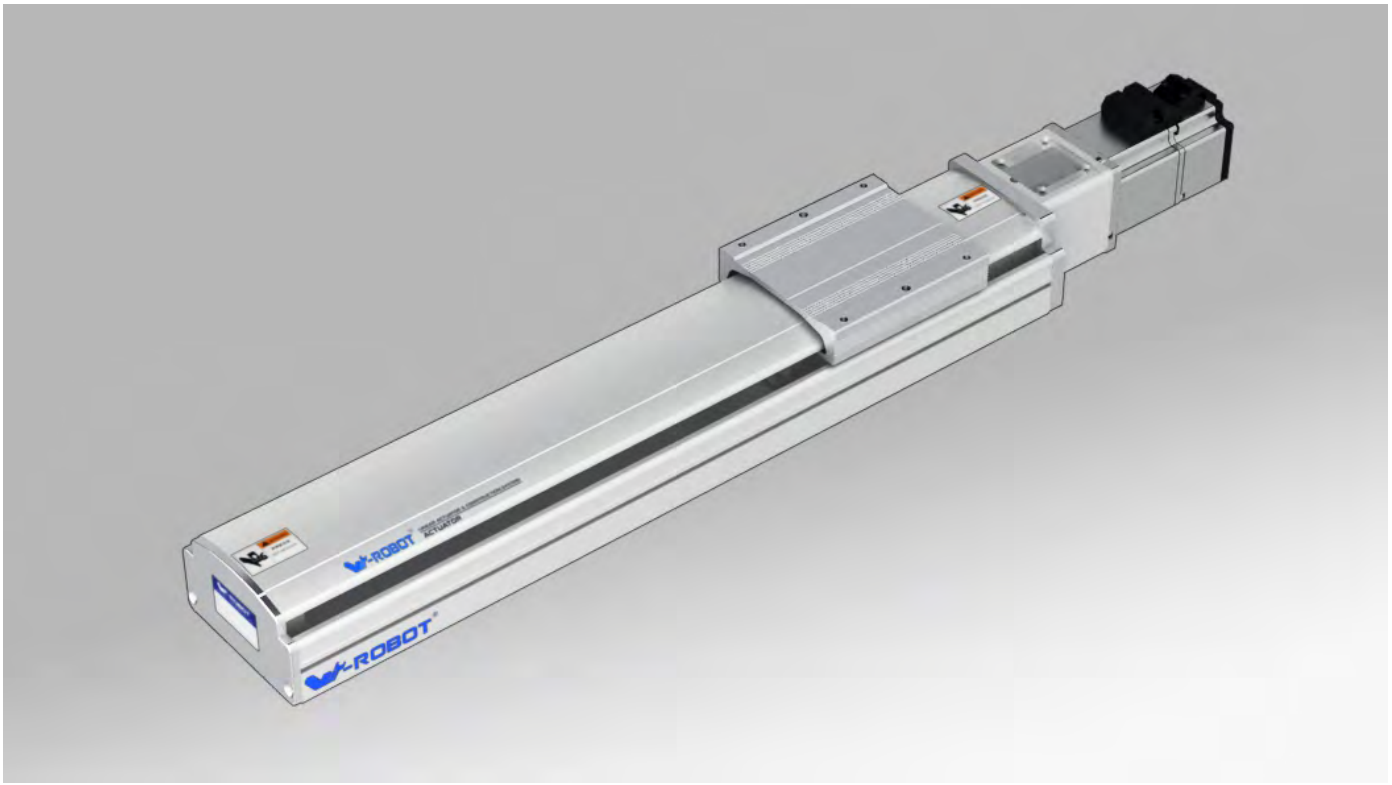

Motor direction

BA

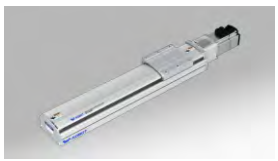

BC

BL

BR

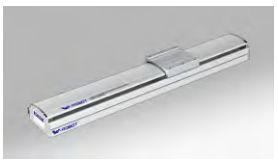

M

Guide for Model Selection

VF10 — L16 — P — S100 — BC — ZP10B — C3 — ____

Base Style	
V	Vseries
F	Semiclosed with Frame Ball Screw Drive
10	Body width100

Ball Screw Lead	
L5	5mm
L10	10mm
L16	16mm
L20	20mm

Accuracy class	
P	High precision
C	Common precision

Stroke(mm)
100-1000

Motor way	
BA	Basis
BC	External
BR	Right Side
BL	Left Side
M	Build-In Motor

Motor Type	
P	Panasonic
M	Mitsubishi
Y	Yaskawa
T	Delta
W	W-Robot

* For Z: Motor is from clients

Motor power	
10	100W
20	200W
40	400W
57	57-Ø8
	57-Ø6.35

Brakes	
No	No brake
B	With brake

Original Sensor position	
External	
C	Motor side
D	Oppsite motor side
E	No

Sensor switch	
External	
2	2pcs
3	3pcs
No sensor	

Sensor type	
No	NPN
P	PNP

Non-standard, d.c.,	
No	Standard type
BL1	Detailed information please see page032
B2	
D01	
U01	
UD01	
H01	
HU01	
HD01	
HUD01	
M01	
S01	

Specification

Motor power AC (W)		100W/200W/400W			
BallScrewØ		(C7)	16		
		(C5)	16		
Repeatability		(C7)	±0.01		
		(C5)	±0.006		
BallScrew Lead(mm)		5	10	16	20
MaximumSpeed(mm/sec) 3000 Motor Speed(rpm/mim)		250	500	800	1000
Maximum Payload(kg)	Horizontal	50/65/65	30/39/45	22/28/33	18/20/23
	Vertical	12/15/18	8/10/12	5/6/7	3/4/5
RatedThrust(N)		330/683/1388	165/341/694	100/213/433	85/174/347
Linear Guide (mm)		15x12.5 -2			
Coupling (mm) (Motor side) x (Ball Screw Side)		8x10	11x10	14x10	14x10
Motor Output		100W	200W		400W
Home Sensor		Outside EE-SX672(NPN) EE-SX672P(PNP)			
		Outside Guide EE-SX674(NPN) EE-SX674P(PNP)			

Wiring drawing of inductor(original point and endpoint)

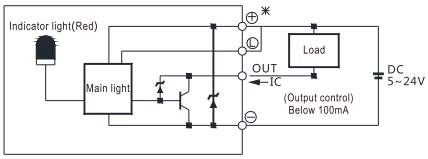

(Figure 1)

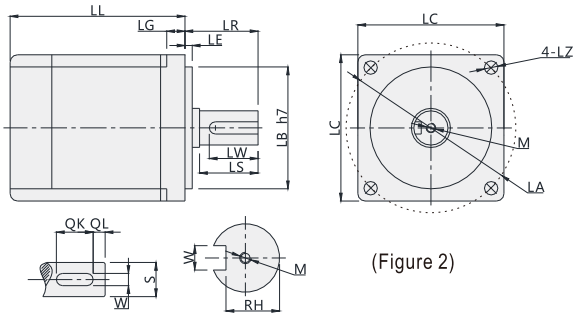

(Figure 2)

* Above repeatability is within strok 300mm,if logner travel needed,it willbe lower.In case stroke over 700 will lead to swing of ball screw,please slow down the speed 15%.Please note figure 2 motor size is same with table 1, or needed to replace coupler and motor holder.)

Servo Motor Matches List

(Table 1)

Servo motor size																			
Power(W)	Brand	Type		LL	LL(Brakes)	LA	LE	LZ	LC	LG	LW	RH	W	LR	S	LB	M	QK	QL
100W	Panasonic	MSMD012G1□	V:With brake U:No brake	92	122	45	3	3.4	38	6	14	6.2	3h9	25	8h6	30h7	M3x6L	-	-
	Delta	ECMA-C20401□S	S:With brake R:No brake	100.6	136.6	46	2.5	4.5	40	5	16	6.2	3	25	8h6	30h7	M3x8L	-	-
	Mitsubishi	HC-KFS12□K	B:With brake □:No brake	86.5	124.5	46	2.5	4.5	42	5	-	-	-	25	8h6	30h7	-	-	-
200W	Panasonic	MSMJ022G1□	V:With brake U:No brake	79.5	115.5	70	3	4.5	60	6.5	20	8.5	4h9	30	11h6	50h7	M4x8L	-	-
	Delta	ECMA-C20602□S	S:With brake R:No brake	105.5	141.5	70	3	5.5	60	7.5	20	11	5	30	14h6	50h7	M4x15L	-	-
	Mitsubishi	HC-KFS23□K	B:With brake □:No brake	99.5	131.5	70	3	5.8	62	7	-	-	-	30	14h6	50h7	-	-	-
400W	Panasonic	MSMJ042G1□	V:With brake U:No brake	99	135	70	3	4.5	60	6.5	20	11	5h9	30	14h6	50h7	M5x10L	-	-
	Delta	ECMA-C20604□S	S:With brake R:No brake	130.7	166.6	70	3	5.5	60	7.5	20	11	5	30	14h6	50h7	M4x15L	-	-
		ECMA-C20804□S	S:With brake R:No brake	112.3	152.8	90	3	6.6	80	8	20	11	5	35	14h6	70h7	M4x15L	-	-
	Mitsubishi	HC-KFS43□K	B:With brake □:No brake	124.5	165.5	70	3	5.8	62	7	-	-	-	30	14h6	50h7	-	-	-

□ Stand for empty

Max. Payload Diameters Table

(Unit : mm)

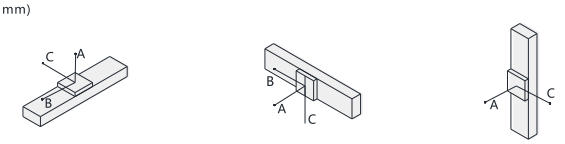

Horizontal installation		A	B	C
Lead 5	30kg	424	24	25
	50kg	0	0	0
	-	-	-	-
Lead 10	15kg	394	76	79
	25kg	184	22	25
	30kg	111	-	-
Lead 16	5kg	937	282	259
	10kg	487	121	116
	15kg	236	40	44

Wall installation		A	B	C
Lead 5	10kg	105	50	1400
	20kg	22	0	538
	30kg	0	0	0
Lead 10	10kg	100	50	545
	20kg	20	0	221
	30kg	0	0	0
Lead 16	5kg	116	58	605
	10kg	24	0	253
	15kg	0	0	0

Vertical installation		A	C
Lead 5	5kg	100	145
	10kg	50	90
	12kg	23	63
Lead 10	4kg	335	375
	6kg	140	180
	8kg	100	140
Lead 16	1kg	372	418
	2kg	166	202
	3kg	113	159

Max. Static Torque Table

(Unit : N.m)

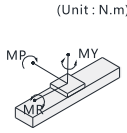

Maximum static torque	
MY	131
MP	131
MR	115

BA: Basis

Unit (mm)

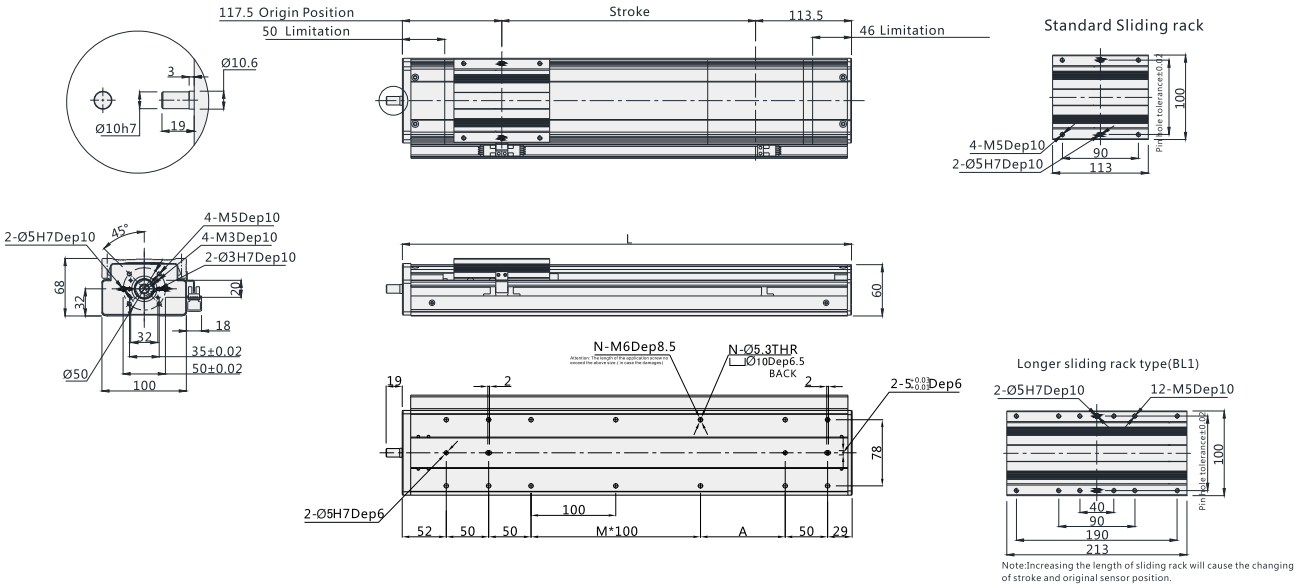

Note:Increasing the length of sliding rack will cause the changing of stroke and original sensor position.

Note: Not including motor weight , in case special stroke please contact technical services. .

Working Stroke	100	150	200	250	300	350	400	450	500	550	600	650	700	750	800	850	900	950	1000
L	331	381	431	481	531	581	631	681	731	781	831	881	931	981	1031	1081	1131	1181	1231
M	0	1	1	2	2	3	3	4	4	5	5	6	6	7	7	8	8	9	9
N	10	12	12	14	14	16	16	18	18	20	20	22	22	24	24	26	26	28	28
A	100	50	100	50	100	50	100	50	100	50	100	50	100	50	100	50	100	50	100
Weight KG	4.1	4.5	4.9	5.3	5.7	6.1	6.5	6.9	7.3	7.7	8.1	8.5	8.9	9.3	9.7	10.1	10.5	10.9	11.3

*Products with color are available stock and short lead time.

BC: External

Unit (mm)

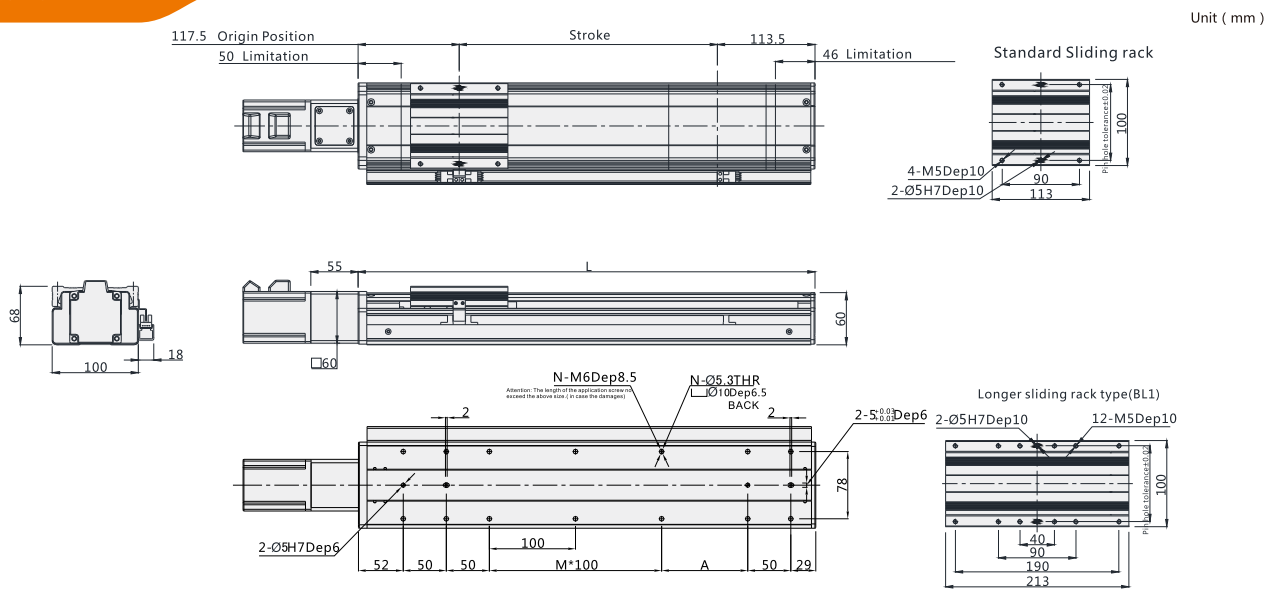

Note:Increasing the length of sliding rack will cause the changing of stroke and original sensor position.

Note: Not including motor weight , in case special stroke please contact technical services. .

Working Stroke	100	150	200	250	300	350	400	450	500	550	600	650	700	750	800	850	900	950	1000
L	331	381	431	481	531	581	631	681	731	781	831	881	931	981	1031	1081	1131	1181	1231
M	0	1	1	2	2	3	3	4	4	5	5	6	6	7	7	8	8	9	9
N	10	12	12	14	14	16	16	18	18	20	20	22	22	24	24	26	26	28	28
A	100	50	100	50	100	50	100	50	100	50	100	50	100	50	100	50	100	50	100
Weight KG	4.4	4.8	5.2	5.6	6	6.4	6.8	7.2	7.6	8	8.4	8.8	9.2	9.6	10	10.4	10.8	11.2	11.6

*Products with color are available stock and short lead time.

BL: Left Side

Unit (mm)

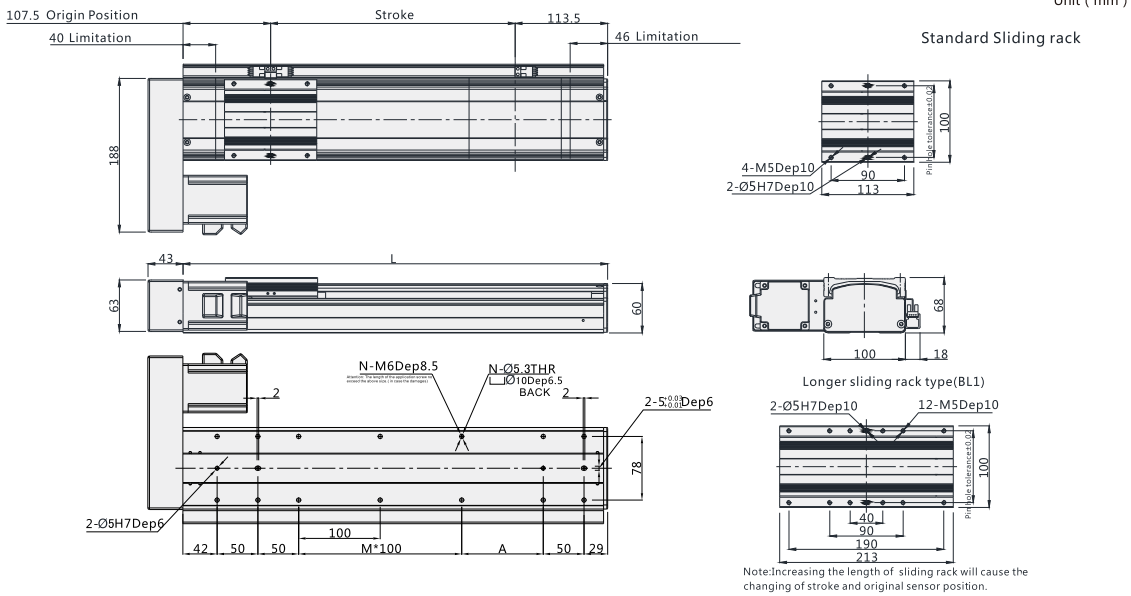

Note:Increasing the length of sliding rack will cause the changing of stroke and original sensor position.

Note: Not including motor weight , in case special stroke please contact technical services. .

Working Stroke	100	150	200	250	300	350	400	450	500	550	600	650	700	750	800	850	900	950	1000
L	321	371	421	471	521	571	621	671	721	771	821	871	921	971	1021	1071	1121	1171	1221
M	0	1	1	2	2	3	3	4	4	5	5	6	6	7	7	8	8	9	9
N	10	12	12	14	14	16	16	18	18	20	20	22	22	24	24	26	26	28	28
A	100	50	100	50	100	50	100	50	100	50	100	50	100	50	100	50	100	50	100
Weight KG	5	5.4	5.8	6.2	6.6	7	7.4	7.8	8.2	8.6	9	9.4	9.8	10.2	10.6	11	11.4	11.8	12.2

*Products with color are available stock and short lead time.

BR: Right Side

Unit (mm)

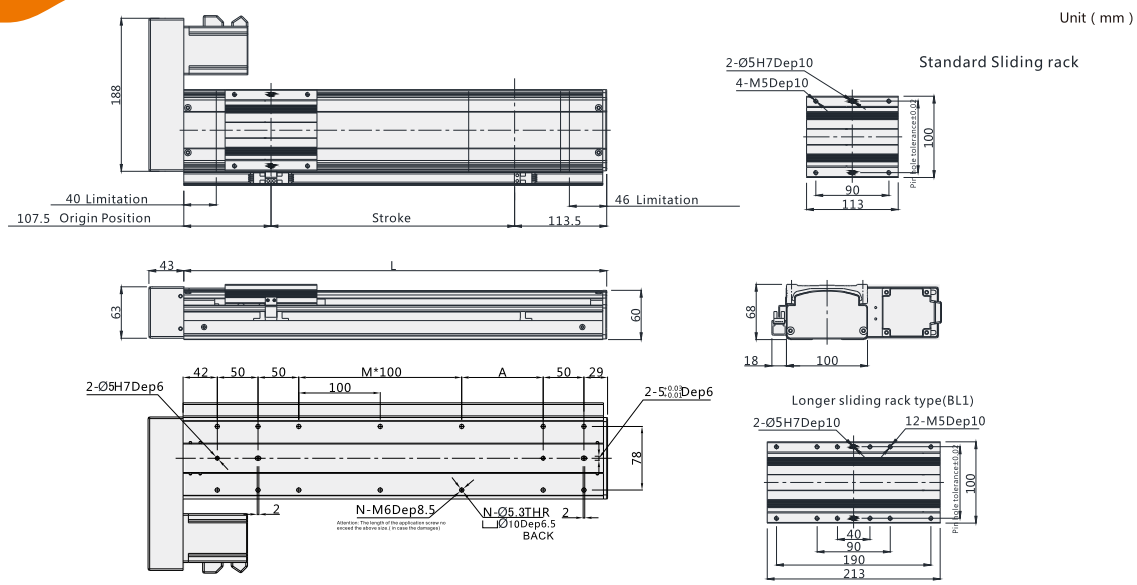

Note:Increasing the length of sliding rack will cause the changing of stroke and original sensor position.

Note: Not including motor weight , in case special stroke please contact technical services. .

Working Stroke	100	150	200	250	300	350	400	450	500	550	600	650	700	750	800	850	900	950	1000
L	321	371	421	471	521	571	621	671	721	771	821	871	921	971	1021	1071	1121	1171	1221
M	0	1	1	2	2	3	3	4	4	5	5	6	6	7	7	8	8	9	9
N	10	12	12	14	14	16	16	18	18	20	20	22	22	24	24	26	26	28	28
A	100	50	100	50	100	50	100	50	100	50	100	50	100	50	100	50	100	50	100
Weight KG	5	5.4	5.8	6.2	6.6	7	7.4	7.8	8.2	8.6	9	9.4	9.8	10.2	10.6	11	11.4	11.8	12.2

*Products with color are available stock and short lead time.

M: Buil-in

Unit (mm)

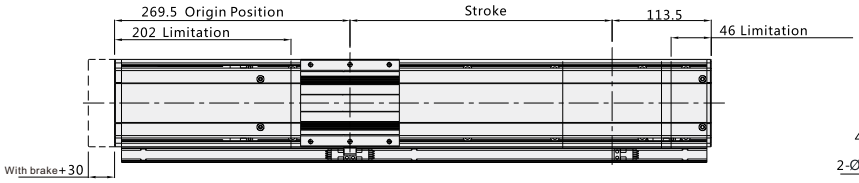

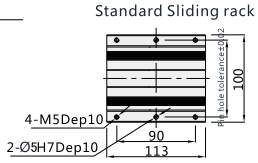

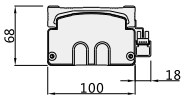

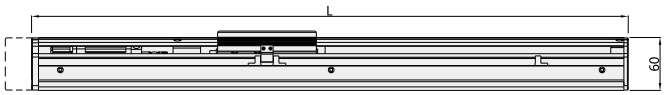

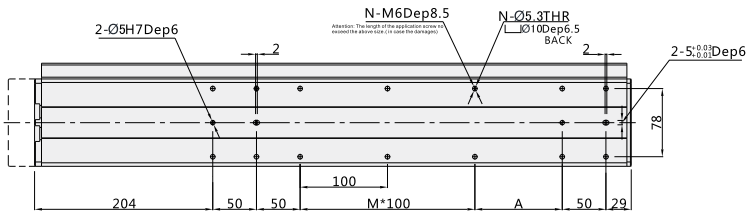

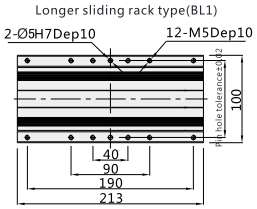

Note:Increasing the length of sliding rack will cause the changing of stroke and original sensor position.

Note: Not including motor weight. *In case special stroke please contact technical services.

Working Stroke	100	150	200	250	300	350	400	450	500	550	600	650	700	750	800	850	900	950	1000
L	483	533	583	633	683	733	783	833	883	933	983	1033	1083	1133	1183	1233	1283	1333	1383
M	0	1	1	2	2	3	3	4	4	5	5	6	6	7	7	8	8	9	9
N	10	12	12	14	14	16	16	18	18	20	20	22	22	24	24	26	26	28	28
A	100	50	100	50	100	50	100	50	100	50	100	50	100	50	100	50	100	50	100
Weight KG	4.9	5.3	5.7	6.1	6.5	6.9	7.3	7.7	8.1	8.5	8.9	9.3	9.7	10.1	10.5	10.9	11.3	11.7	12.1

*Products with color ▭ are available stock and short lead time.

VF12

W-ROBOT® Linear Drives

Motor direction

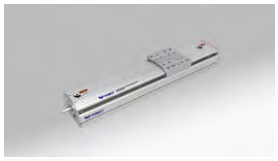

BA

BC

BL

BR

M

Guide for Model Selection

VF12 – L16 – P – S100 – BC – ZP20B – C3 – ____

Base Style	
V	Vseries
F	Semiclosed with Frame Ball Screw Drive
12	Body width120

Ball Screw Lead	
L5	5mm
L10	10mm
L16	16mm
L20	20mm

Accuracy class	
P	High precision
C	Common precision

Stroke(mm)
100-1200

Motor way	
BA	Basis
BC	External
BR	Right Side
BL	Left Side
M	Build-In Motor

Motor Type	
P	Panasonic
M	Mitsubishi
Y	Yaskawa
T	Delta
W	W-Robot

* For Z: Motor is from clients

Motor power	
20	200W
40	400W
57	57-Ø8
	57-Ø6.35

Brakes	
No	No brake
B	With brake

Original Sensor position	
External	
C	Motor side
D	Oppsite motor side
E	No

Sensor switch	
External	
2	2pcs
3	3pcs
No sensor	

Sensor type	
No	NPN
P	PNP

Non-standard, d.c.,	
No	Standard type
BL1	Detailed information please see page032
B2	
D01	
U01	
UD01	
H01	
HU01	
HD01	
HUD01	
M01	
S01	

Specification

Motor power AC (W)		200W/400W			
BallScrewØ		C级 (C7)	16		
		P级(C5)	16		
Repeatability		C级(C7)	±0.01		
		P级(C5)	±0.006		
BallScrew Lead(mm)		5	10	16	20
MaximumSpeed(mm/sec) 3000 Motor Speed(rpm/mim)		250	500	800	1000
Maximum Payload(kg)	Horizontal	70/84	47/56	30/36	24/28
	Vertical	17/20	12/17	6/7	4/5
RatedThrust(N)		683/1388	341/694	213/433	174/347
Linear Guide (mm)		15x12.5 -2			
Coupling (mm) (Motor side) x (Ball Screw Side)		11x10	14x10	14x10	
Motor Output		200W		400W	
Home Sensor		Outside EE-SX672(NPN) EE-SX672P(PNP)			
		Outside Guide EE-SX674(NPN) EE-SX674P(PNP)			

Wiring drawing of inductor(original point and endpoint)

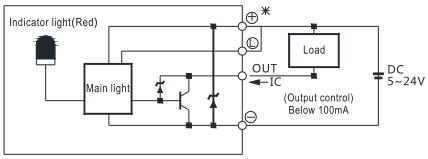

(Figure 1)

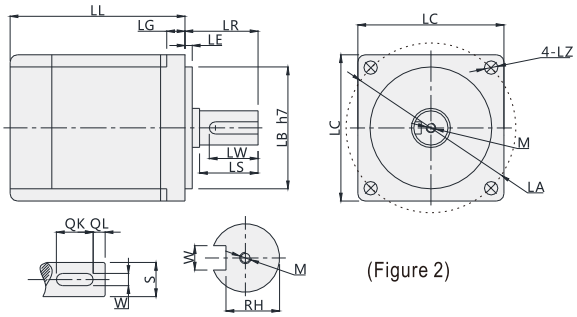

(Figure 2)

* Above repeatability is within strok 300mm,if logner travel needed,it willbe lower.In case stroke over 600 will lead to swing of ball screw,please slow down the speed 15%.Please note figure 2 motor size is same with table 1, or needed to replace coupler and motor holder.)

Servo Motor Matches List

(Table 1)

Servo motor size																			
Power(W)	Brand	Type		LL	LL(Brakes)	LA	LE	LZ	LC	LG	LW	RH	W	LR	S	LB	M	QK	QL
200W	Panasonic	MSMJ022G1□	V:With brake U:No brake	79.5	115.5	70	3	4.5	60	6.5	20	8.5	4h9	30	11h6	50h7	M4x8L	-	-
	Delta	ECMA-C20602□S	S:With brake R:No brake	105.5	141.5	70	3	5.5	60	7.5	20	11	5	30	14h6	50h7	M4x15L	-	-
	Mitsubishi	HC-KFS23□K	B:With brake □:No brake	99.5	131.5	70	3	5.8	62	7	-	-	-	30	14h6	50h7	-	-	-
400W	Panasonic	MSMJ042G1□	V:With brake U:No brake	99	135	70	3	4.5	60	6.5	20	11	5h9	30	14h6	50h7	M5x10L	-	-
	Delta	ECMA-C20604□S	S:With brake R:No brake	130.7	166.6	70	3	5.5	60	7.5	20	11	5	30	14h6	50h7	M4x15L	-	-
		ECMA-C20804□S	S:With brake R:No brake	112.3	152.8	90	3	6.6	80	8	20	11	5	35	14h6	70h7	M4x15L	-	-
	Mitsubishi	HC-KFS43□K	B:With brake □:No brake	124.5	165.5	70	3	5.8	62	7	-	-	-	30	14h6	50h7	-	-	-
750W	Panasonic	MSMJ082G1□	V:With brake U:No brake	122	149	90	3	6	80	8	25	15.5	6h9	35	19h6	70h7	M5x10L	-	-
	Delta	ECMA-C20807□S	S:With brake R:No brake	138.3	178	90	3	6.6	80	8	25	15.5	6	35	19h6	70h7	M6x20L	-	-
		ECMA-C20907□S	S:With brake R:No brake	130.2	161.3	100	3	6.6	86	8	20	13	5	35	16h6	80h7	M5x15L	-	-
	Mitsubishi	HC-KFS73□K	B:With brake □:No brake	142	177.5	90	3	6.6	82	8	-	-	-	40	19h6	70h7	-	-	-

□ Stand for empty

Max. Payload Diameters Table

(Unit : mm)

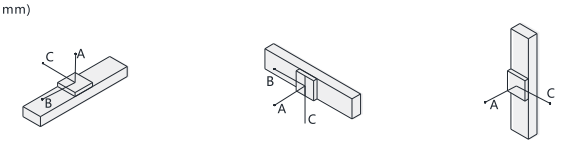

Horizontal installation		A	B	C
Lead 5	40kg	2448	316	322
	55kg	2197	247	257
	70kg	2005	207	219
Lead 10	25kg	1958	370	490
	35kg	1660	370	330
	47kg	1725	247	243
Lead 16	10kg	1800	1400	311
	20kg	1100	1100	139
	30kg	1047	445	324

Wall installation		A	B	C
Lead 5	40kg	204	112	1394
	55kg	130	57	1115
	70kg	85	24	895
Lead 10	25kg	414	333	1277
	35kg	235	157	929
	47kg	129	57	751
Lead 16	10kg	461	372	1410
	20kg	264	178	1027
	30kg	148	69	832

Vertical installation		A	C
Lead 5	5kg	762	614
	10kg	607	489
	12kg	498	493
Lead 10	4kg	1365	1101
	6kg	901	727
	8kg	674	543
Lead 16	1kg	1087	1217
	2kg	997	805
	6kg	747	603

Max. Static Torque Table

(Unit : N.m)

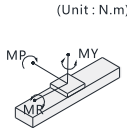

Maximum static torque	
MY	174
MP	175
MR	153

BA: Basis

Unit (mm)

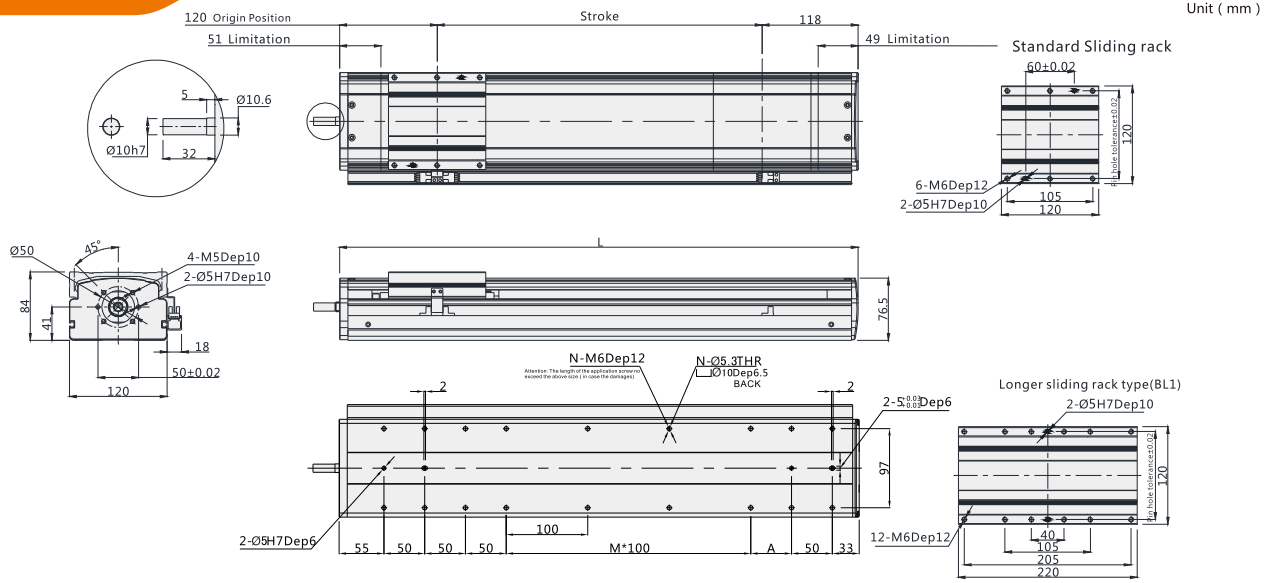

Note: Not including motor weight , in case special stroke please contact technical services. .

Working Stroke	100	150	200	250	300	350	400	450	500	550	600	650	700	750	800	850	900	950	1000	1050	1100	1150	1200
L	338	388	438	488	538	588	638	688	738	788	838	888	938	988	1038	1088	1138	1188	1238	1288	1338	1388	1438
M	0	0	1	1	2	2	3	3	4	4	5	5	6	6	7	7	8	8	9	9	10	10	11
N	12	12	14	14	16	16	18	18	20	20	22	22	24	24	26	26	28	28	30	30	32	32	34
A	50	100	50	100	50	100	50	100	50	100	50	100	50	100	50	100	50	100	50	100	50	100	50
Weight KG	5.9	6.4	6.9	7.4	7.9	8.4	8.9	9.4	9.9	10.4	10.9	11.4	11.9	12.4	12.9	13.4	13.9	14.4	14.9	15.4	15.9	16.4	16.9

*Products with color are available stock and short lead time.

BC: External

Unit (mm)

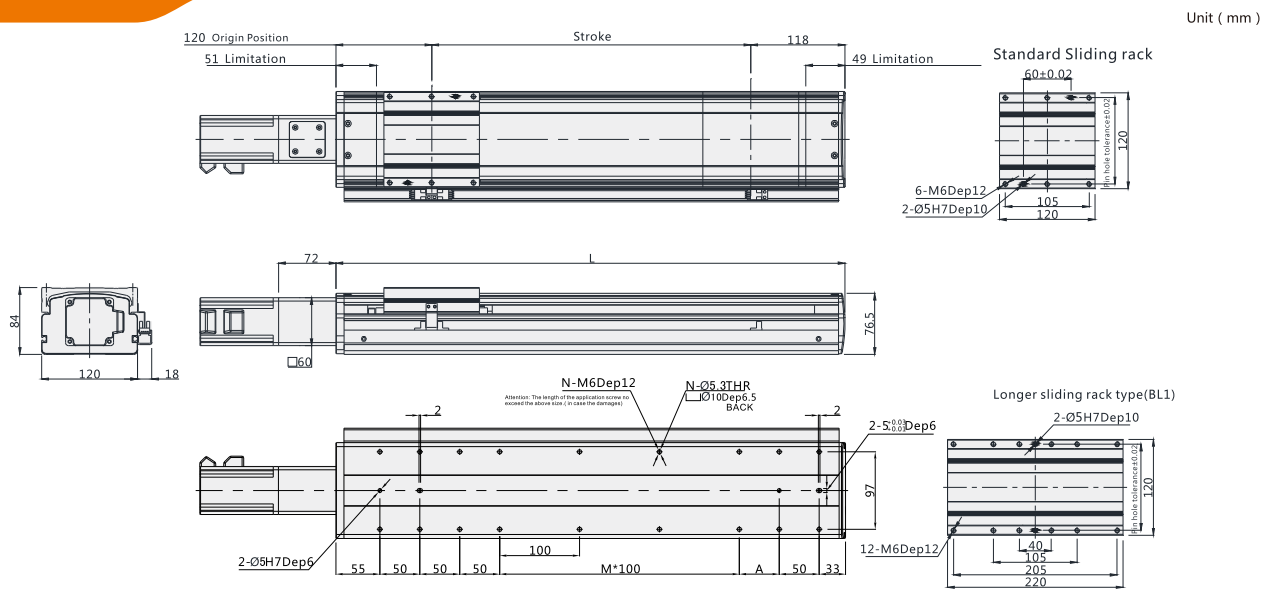

Note:Increasing the length of sliding rack will cause the changing of stroke and original sensor position.

Note: Not including motor weight , in case special stroke please contact technical services. .

Working Stroke	100	150	200	250	300	350	400	450	500	550	600	650	700	750	800	850	900	950	1000	1050	1100	1150	1200
L	338	388	438	488	538	588	638	688	738	788	838	888	938	988	1038	1088	1138	1188	1238	1288	1338	1388	1438
M	0	0	1	1	2	2	3	3	4	4	5	5	6	6	7	7	8	8	9	9	10	10	11
N	12	12	14	14	16	16	18	18	20	20	22	22	24	24	26	26	28	28	30	30	32	32	34
A	50	100	50	100	50	100	50	100	50	100	50	100	50	100	50	100	50	100	50	100	50	100	50
Weight KG	6.2	6.7	7.2	7.7	8.2	8.7	9.2	9.7	10.2	10.7	11.2	11.7	12.2	12.7	13.2	13.7	14.2	14.7	15.2	15.7	16.2	16.7	17.2

*Products with color are available stock and short lead time.

BL: Left Side

Unit (mm)

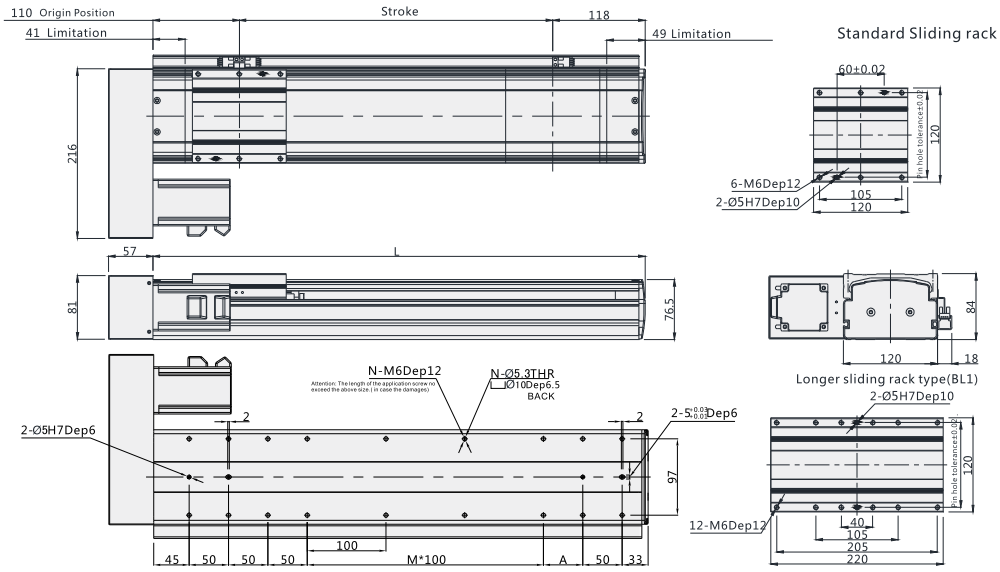

Note:Increasing the length of sliding rack will cause the changing of stroke and original sensor position.

Note: Not including motor weight , in case special stroke please contact technical services. .

Working Stroke	100	150	200	250	300	350	400	450	500	550	600	650	700	750	800	850	900	950	1000	1050	1100	1150	1200
L	328	378	428	478	528	578	628	678	728	778	828	878	928	978	1028	1078	1128	1178	1228	1278	1328	1378	1428
M	0	0	1	1	2	2	3	3	4	4	5	5	6	6	7	7	8	8	9	9	10	10	11
N	12	12	14	14	16	16	18	18	20	20	22	22	24	24	26	26	28	28	30	30	32	32	34
A	50	100	50	100	50	100	50	100	50	100	50	100	50	100	50	100	50	100	50	100	50	100	50
Weight KG	7.3	7.8	8.3	8.8	9.3	9.8	10.3	10.8	11.3	11.8	12.3	12.8	13.3	13.8	14.3	14.8	15.3	15.8	16.3	16.8	17.3	17.8	18.3

*Products with color ▭ are available stock and short lead time.

BR: Right Side

Unit (mm)

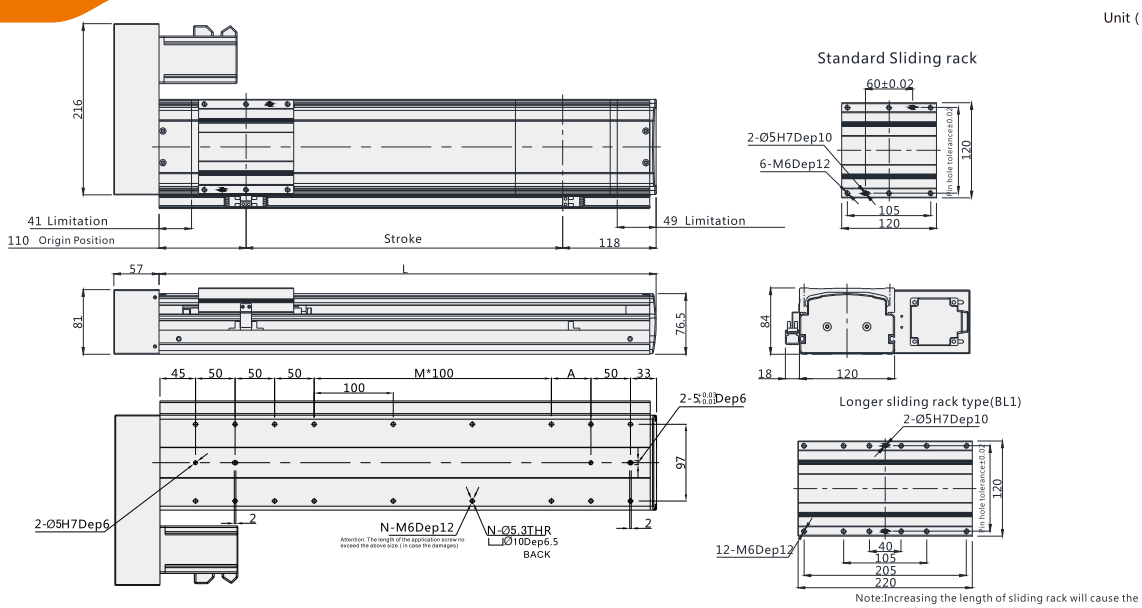

Note:Increasing the length of sliding rack will cause the changing of stroke and original sensor position.

Note: Not including motor weight , in case special stroke please contact technical services. .

Working Stroke	100	150	200	250	300	350	400	450	500	550	600	650	700	750	800	850	900	950	1000	1050	1100	1150	1200
L	328	378	428	478	528	578	628	678	728	778	828	878	928	978	1028	1078	1128	1178	1228	1278	1328	1378	1428
M	0	0	1	1	2	2	3	3	4	4	5	5	6	6	7	7	8	8	9	9	10	10	11
N	12	12	14	14	16	16	18	18	20	20	22	22	24	24	26	26	28	28	30	30	32	32	34
A	50	100	50	100	50	100	50	100	50	100	50	100	50	100	50	100	50	100	50	100	50	100	50
Weight KG	7.3	7.8	8.3	8.8	9.3	9.8	10.3	10.8	11.3	11.8	12.3	12.8	13.3	13.8	14.3	14.8	15.3	15.8	16.3	16.8	17.3	17.8	18.3

*Products with color ▭ are available stock and short lead time.

M: Buil-in

Unit (mm)

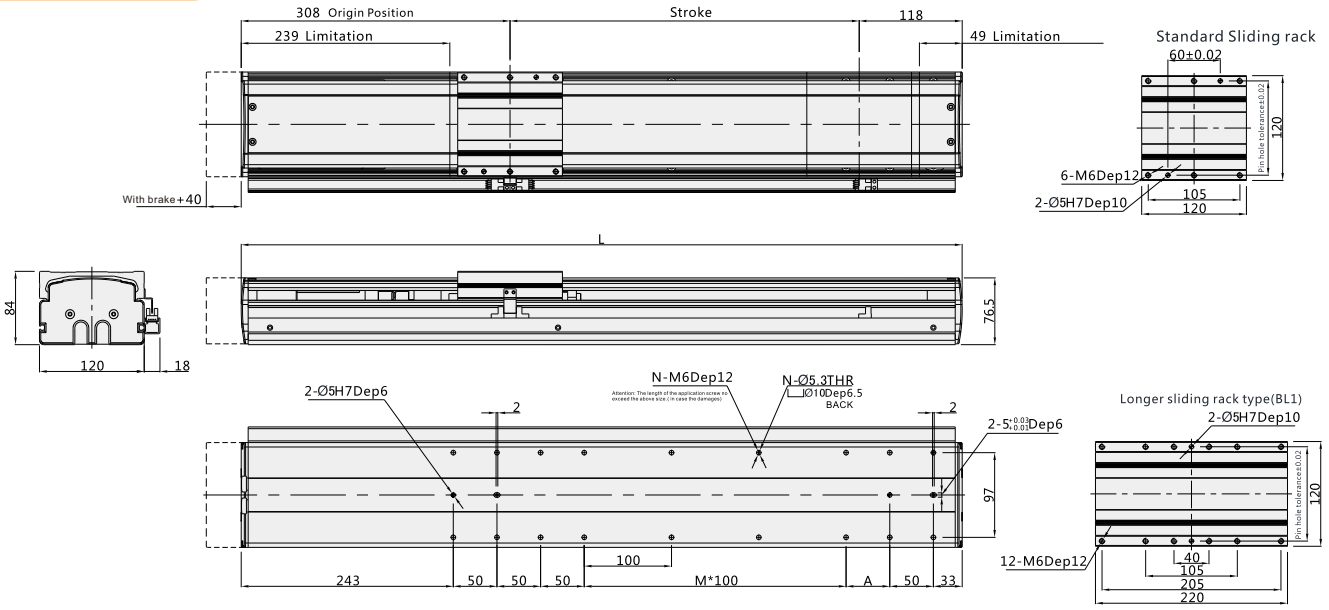

Note: Not including motor weight. *In case special stroke please contact technical services.

Working Stroke	100	150	200	250	300	350	400	450	500	550	600	650	700	750	800	850	900	950	1000	1050	1100	1150	1200
L	526	576	626	676	726	776	826	876	926	976	1026	1076	1126	1176	1226	1276	1326	1376	1426	1476	1526	1576	1626
M	0	0	1	1	2	2	3	3	4	4	5	5	6	6	7	7	8	8	9	9	10	10	11
N	12	12	14	14	16	16	18	18	20	20	22	22	24	24	26	26	28	28	30	30	32	32	34
A	50	100	50	100	50	100	50	100	50	100	50	100	50	100	50	100	50	100	50	100	50	100	50
Weight KG	6.9	7.4	7.9	8.4	8.9	9.4	9.9	10.4	10.9	11.4	11.9	12.4	12.9	13.4	13.9	14.4	14.9	15.4	15.9	16.4	16.9	17.4	17.9

*Products with color ▭ are available stock and short lead time.

VF14

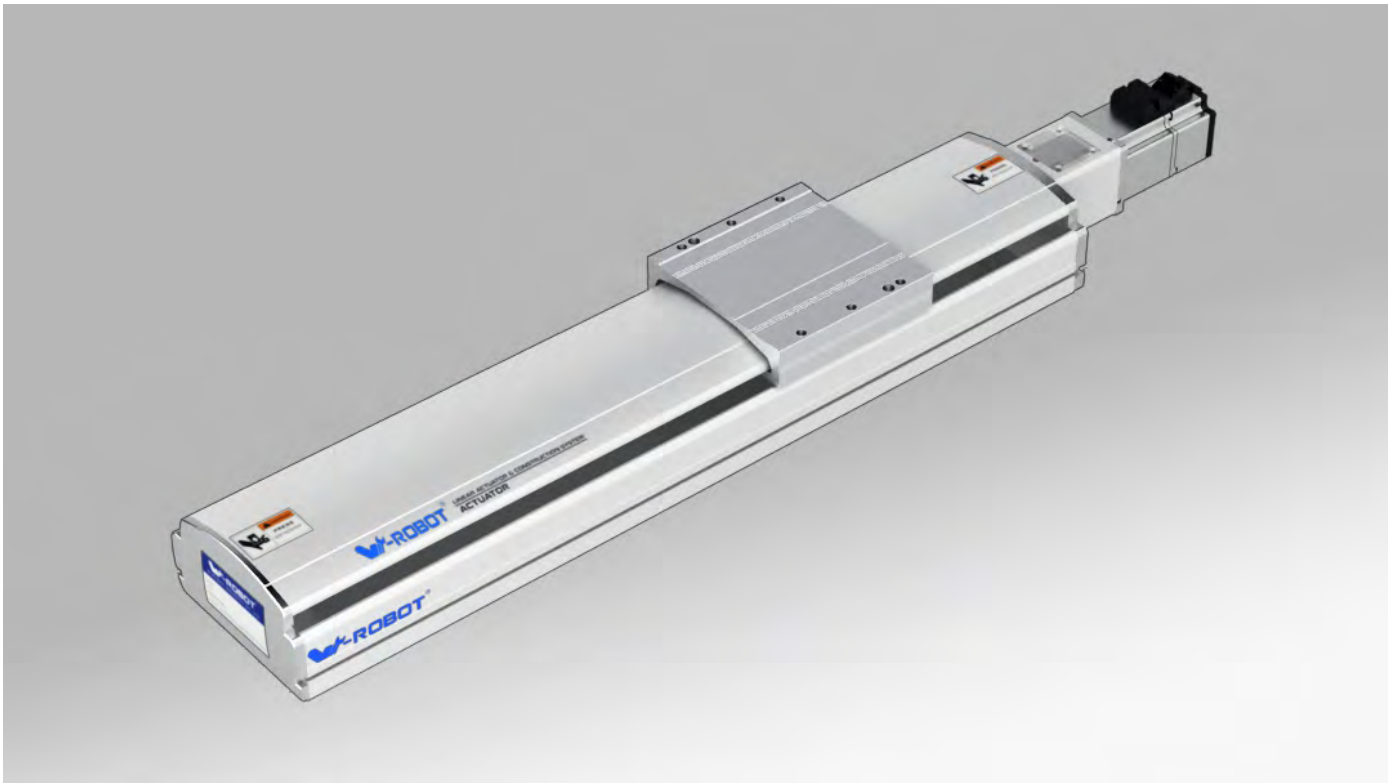

Motor direction

BA

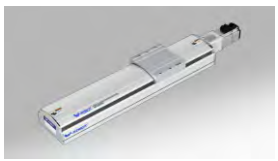

BC

BL

BR

M

Guide for Model Selection

VF14 — L20 — P — S100 — BC — ZP40B — C3 — ____

Base Style	
V	Vseries
F	Semiclosed with Frame Ball Screw Drive
14	Body width140

Ball Screw Lead	
L5	5mm
L10	10mm
L20	20mm
L40	40mm

Accuracy class	
P	High precision
C	Common precision

Stroke(mm)
100-1500

Motor way	
BA	Basis
BC	External
BR	Right Side
BL	Left Side
M	Build-In Motor

Motor Type	
P	Panasonic
M	Mitsubishi
Y	Yaskawa
T	Delta
W	W-Robot

* For Z: Motor is from clients

Motor power	
40	400W
75	750W
Brakes	
No	No brake
B	With brake

Original Sensor position		Sensor switch	
External		External	
C	Motor side	2	2pcs
D	Oppsite motor side	3	3pcs
E	No	No sensor	

Sensor type	
No	NPN
P	PNP

Non-standard, d.c.,	
No	Standard type
BL1	Detailed information please see page 032
B2	
D01	
U01	
UD01	
H01	
HU01	
HD01	
HUD01	
M01	
S01	

Specification

Motor power AC (W)		400W/750W			
BallScrewØ		(C7)	20		
		(C5)	20		
Repeatability		(C7)	±0.01		
		(C5)	±0.006		
BallScrew Lead(mm)		5	10	20	40
MaximumSpeed(mm/sec) 3000 Motor Speed(rpm/mim)		250	500	1000	2000
Maximum Payload(kg)	Horizontal	110/115	100/105	70/80	30/50
	Vertical	40/45	29/35	14/20	5/10
RatedThrust(N)		1388/2565	694/1281	347/640	170/320
Linear Guide (mm)		20x15.5 -2			
Coupling (mm) (Motor side) x (Ball Screw Side)		14x12		19x12	
Motor Output		400W		750W	
Home Sensor		Outside EE-SX672(NPN) EE-SX672P(PNP)			
		Outside Guide EE-SX674(NPN) EE-SX674P(PNP)			

Wiring drawing of inductor(original point and endpoint)

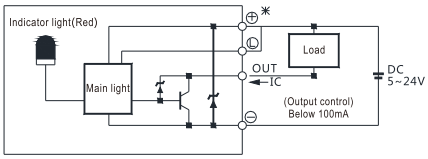

(Figure 1)

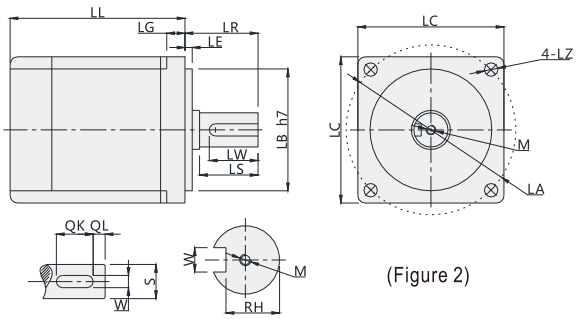

(Figure 2)

* Above repeatability is within strok 300mm,if logner travel needed,it willbe lower.In case stroke over 600 will lead to swing of ball screw,please slow down the speed 15%.Please note figure 2 motor size is same with table 1, or needed to replace coupler and motor holder.)

Servo Motor Matches List

(Table 1)

Servo motor size																			
Power(W)	Brand	Type		LL	LL(Brakes)	LA	LE	LZ	LC	LG	LW	RH	W	LR	S	LB	M	QK	QL
200W	Panasonic	MSMJ022G1□	V:With brake U:No brake	79.5	115.5	70	3	4.5	60	6.5	20	8.5	4h9	30	11h6	50h7	M4x8L	-	-
	Delta	ECMA-C20602□S	S:With brake R:No brake	105.5	141.5	70	3	5.5	60	7.5	20	11	5	30	14h6	50h7	M4x15L	-	-
	Mitsubishi	HC-KFS23□K	B:With brake □:No brake	99.5	131.5	70	3	5.8	62	7	-	-	-	30	14h6	50h7	-	-	-
400W	Panasonic	MSMJ042G1□	V:With brake U:No brake	99	135	70	3	4.5	60	6.5	20	11	5h9	30	14h6	50h7	M5x10L	-	-
	Delta	ECMA-C20604□S	S:With brake R:No brake	130.7	166.6	70	3	5.5	60	7.5	20	11	5	30	14h6	50h7	M4x15L	-	-
		ECMA-C20804□S	S:With brake R:No brake	112.3	152.8	90	3	6.6	80	8	20	11	5	35	14h6	70h7	M4x15L	-	-
	Mitsubishi	HC-KFS43□K	B:With brake □:No brake	124.5	165.5	70	3	5.8	62	7	-	-	-	30	14h6	50h7	-	-	-
750W	Panasonic	MSMJ082G1□	V:With brake U:No brake	122	149	90	3	6	80	8	25	15.5	6h9	35	19h6	70h7	M5x10L	-	-
	Delta	ECMA-C20807□S	S:With brake R:No brake	138.3	178	90	3	6.6	80	8	25	15.5	6	35	19h6	70h7	M6x20L	-	-
		ECMA-C20907□S	S:With brake R:No brake	130.2	161.3	100	3	6.6	86	8	20	13	5	35	16h6	80h7	M5x15L	-	-
	Mitsubishi	HC-KFS73□K	B:With brake □:No brake	142	177.5	90	3	6.6	82	8	-	-	-	40	19h6	70h7	-	-	-

□ Stand for empty

Max. Payload Diameters Table

(Unit : mm)

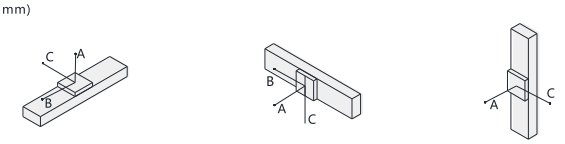

Horizontal installation		A	B	C
Lead 5	55kg	2235	327	433
	95kg	1500	156	249
	115kg	1385	152	202
Lead 10	55kg	1830	321	428
	70kg	1508	190	252
	90kg	1389	156	206
Lead 20	25kg	1989	675	746
	45kg	1332	395	445
	78kg	1047	238	201

Wall installation		A	B	C
Lead 5	55kg	378	263	1829
	95kg	208	124	1497
	115kg	163	89	1377
Lead 10	55kg	400	265	1831
	70kg	220	135	1508
	90kg	173	100	1389
Lead 20	25kg	737	612	1930
	45kg	427	332	1260
	78kg	253	174	944

Vertical installation		A	C
Lead 5	15kg	1133	915
	25kg	908	743
	45kg	745	722
Lead 10	10kg	1334	1334
	20kg	788	788
	35kg	563	563
Lead 20	1kg	1265	1265
	5kg	1114	1114
	20kg	489	489

Max. Static Torque Table

(Unit : N.m)

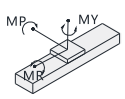

Maximum static torque	
MY	784
MP	788
MR	691

BA: Basis

Unit (mm)

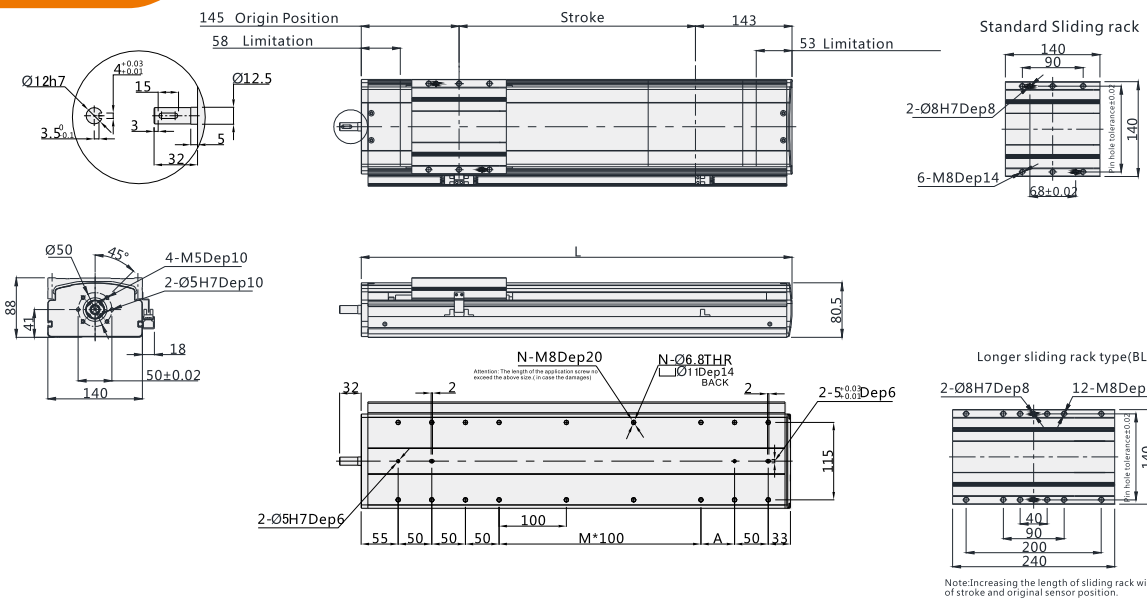

Note:Increasing the length of sliding rack will cause the changing of stroke and original sensor position.

Note: Not including motor weight , in case special stroke please contact technical services.

Working Stroke	100	150	200	250	300	350	400	450	500	550	600	650	700	750	800	850	900	950	1000	1050	1100	1150	1200	1250	1300	1350	1400	1450	1500
L	388	438	488	538	588	638	688	738	788	838	888	938	988	1038	1088	1138	1188	1238	1288	1338	1388	1438	1488	1538	1588	1638	1688	1738	1788
M	0	1	1	2	2	3	3	4	4	5	5	6	6	7	7	8	8	9	9	10	10	11	11	12	12	13	13	14	14
N	12	14	14	16	16	18	18	20	20	22	22	24	24	26	26	28	28	30	30	32	32	34	34	36	36	38	38	40	40
A	100	50	100	50	100	50	100	50	100	50	100	50	100	50	100	50	100	50	100	50	100	50	100	50	100	50	100	50	100
Weight KG	9.4	10.1	10.8	11.5	12.2	12.9	13.6	14.3	15	15.7	16.4	17.1	17.8	18.5	19.2	19.9	20.6	21.3	22	22.7	23.4	24.1	24.8	25.5	26.2	26.9	27.6	28.3	29

*Products with color ▭ are available stock and short lead time.

BC: External

Unit (mm)

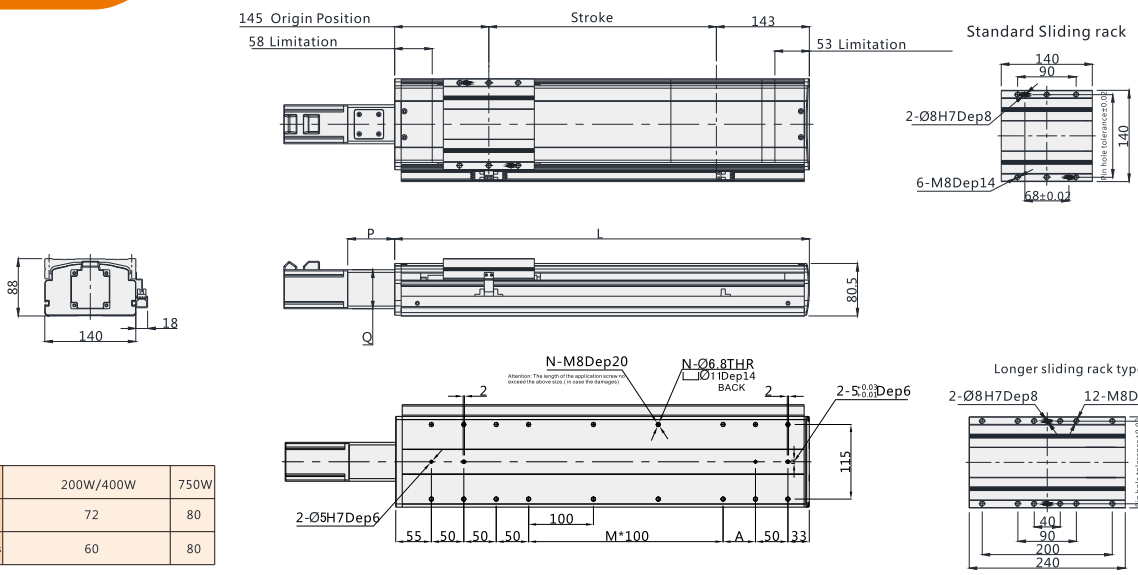

Motor Specification	200W/400W	750W
Corresponding P values	72	80
Corresponding Q values	60	80

Note:Increasing the length of sliding rack will cause the changing of stroke and original sensor position.

Note: Not including motor weight , in case special stroke please contact technical services.

Working Stroke	100	150	200	250	300	350	400	450	500	550	600	650	700	750	800	850	900	950	1000	1050	1100	1150	1200	1250	1300	1350	1400	1450	1500
L	388	438	488	538	588	638	688	738	788	838	888	938	988	1038	1088	1138	1188	1238	1288	1338	1388	1438	1488	1538	1588	1638	1688	1738	1788
M	0	1	1	2	2	3	3	4	4	5	5	6	6	7	7	8	8	9	9	10	10	11	11	12	12	13	13	14	14
N	12	14	14	16	16	18	18	20	20	22	22	24	24	26	26	28	28	30	30	32	32	34	34	36	36	38	38	40	40
A	100	50	100	50	100	50	100	50	100	50	100	50	100	50	100	50	100	50	100	50	100	50	100	50	100	50	100	50	100
Weight KG	10.1	10.8	11.5	12.2	12.9	13.6	14.3	15	15.7	16.4	17.1	17.8	18.5	19.2	19.9	20.6	21.3	22	22.7	23.4	24.1	24.8	25.5	26.2	26.9	27.6	28.3	29	29.7

*Products with color ▭ are available stock and short lead time.

BL: Left Side

Unit (mm)

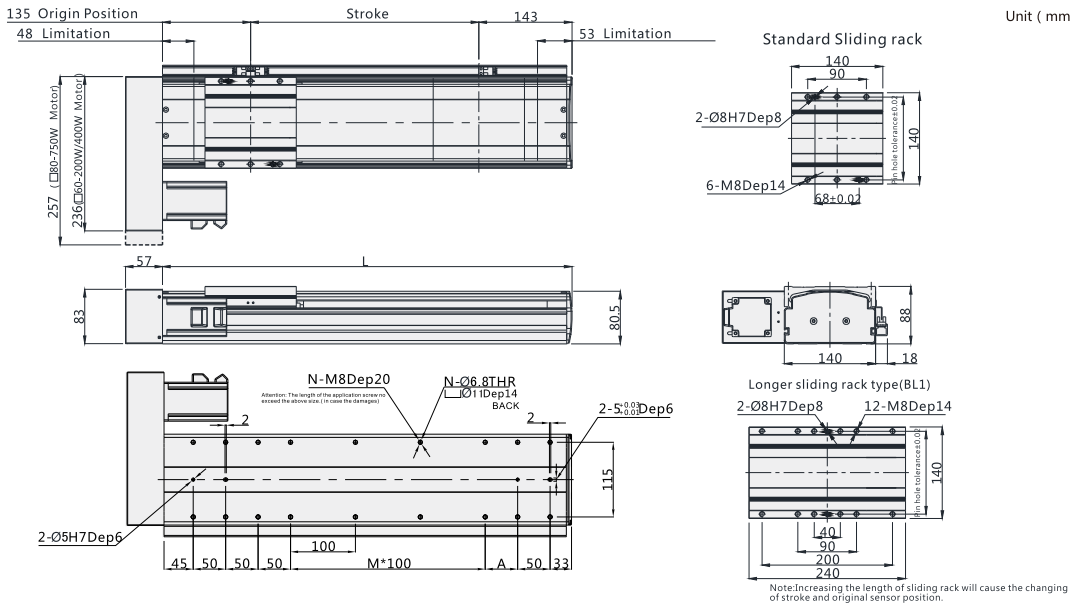

Note:Increasing the length of sliding rack will cause the changing of stroke and original sensor position.

Note: Not including motor weight , in case special stroke please contact technical services.

Working Stroke	100	150	200	250	300	350	400	450	500	550	600	650	700	750	800	850	900	950	1000	1050	1100	1150	1200	1250	1300	1350	1400	1450	1500
L	378	428	478	528	578	628	678	728	778	828	878	928	978	1028	1078	1128	1178	1228	1278	1328	1378	1428	1478	1528	1578	1628	1678	1728	1778
M	0	1	1	2	2	3	3	4	4	5	5	6	6	7	7	8	8	9	9	10	10	11	11	12	12	13	13	14	14
N	12	14	14	16	16	18	18	20	20	22	22	24	24	26	26	28	28	30	30	32	32	34	34	36	36	38	38	40	40
A	100	50	100	50	100	50	100	50	100	50	100	50	100	50	100	50	100	50	100	50	100	50	100	50	100	50	100	50	100
Weight KG	11	11.7	12.4	13.1	13.8	14.5	15.2	15.9	16.6	17.3	18	18.7	19.4	20.1	20.8	21.5	22.2	22.9	23.6	24.3	25	25.7	26.4	27.1	27.8	28.5	29.2	29.9	30.6

*Products with color ▭ are available stock and short lead time.

BR: Right Side

Unit (mm)

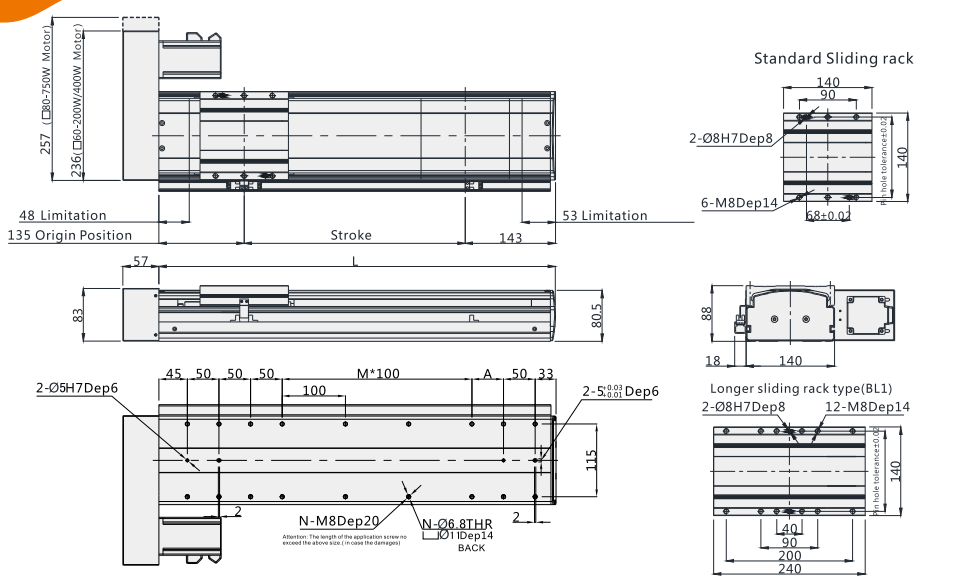

Note:Increasing the length of sliding rack will cause the changing of stroke and original sensor position.

Note: Not including motor weight , in case special stroke please contact technical services.

Working Stroke	100	150	200	250	300	350	400	450	500	550	600	650	700	750	800	850	900	950	1000	1050	1100	1150	1200	1250	1300	1350	1400	1450	1500
L	378	428	478	528	578	628	678	728	778	828	878	928	978	1028	1078	1128	1178	1228	1278	1328	1378	1428	1478	1528	1578	1628	1678	1728	1778
M	0	1	1	2	2	3	3	4	4	5	5	6	6	7	7	8	8	9	9	10	10	11	11	12	12	13	13	14	14
N	12	14	14	16	16	18	18	20	20	22	22	24	24	26	26	28	28	30	30	32	32	34	34	36	36	38	38	40	40
A	100	50	100	50	100	50	100	50	100	50	100	50	100	50	100	50	100	50	100	50	100	50	100	50	100	50	100	50	100
Weight KG	11	11.7	12.4	13.1	13.8	14.5	15.2	15.9	16.6	17.3	18	18.7	19.4	20.1	20.8	21.5	22.2	22.9	23.6	24.3	25	25.7	26.4	27.1	27.8	28.5	29.2	29.9	30.6

*Products with color ▭ are available stock and short lead time.

M: Buil-in

Unit (mm)

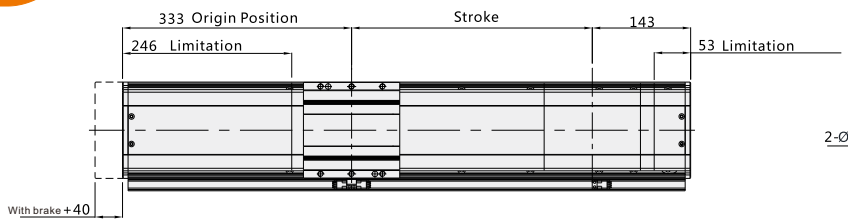

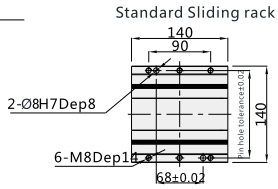

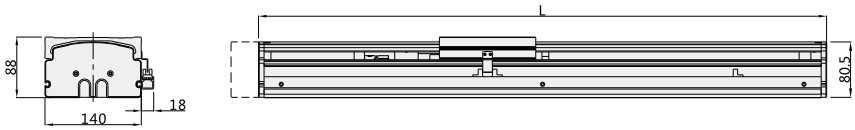

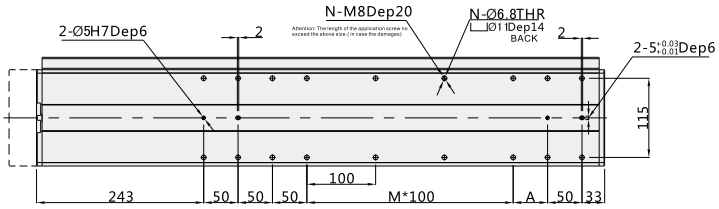

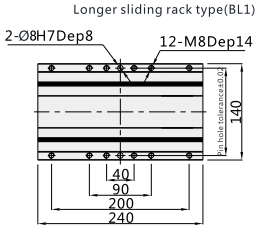

Note:Increasing the length of sliding rack will cause the changing of stroke and original sensor position.

Note: Not including motor weight. *In case special stroke please contact technical services.

Working Stroke	100	150	200	250	300	350	400	450	500	550	600	650	700	750	800	850	900	950	1000	1050	1100	1150	1200	1250	1300	1350	1400	1450	1500
L	576	626	676	726	776	826	876	926	976	1026	1076	1126	1176	1226	1276	1326	1376	1426	1476	1526	1576	1626	1676	1726	1776	1826	1876	1926	1976
M	0	1	1	2	2	3	3	4	4	5	5	6	6	7	7	8	8	9	9	10	10	11	11	12	12	13	13	14	14
N	12	14	14	16	16	18	18	20	20	22	22	24	24	26	26	28	28	30	30	32	32	34	34	36	36	38	38	40	40
A	100	50	100	50	100	50	100	50	100	50	100	50	100	50	100	50	100	50	100	50	100	50	100	50	100	50	100	50	100
Weight KG	10.8	11.5	12.2	12.9	13.6	14.3	15	15.7	16.4	17.1	17.8	18.5	19.2	19.9	20.6	21.3	22	22.7	23.4	24.1	24.8	25.5	26.2	26.9	27.6	28.3	29	29.7	30.4

*Products with color ▭ are available stock and short lead time.

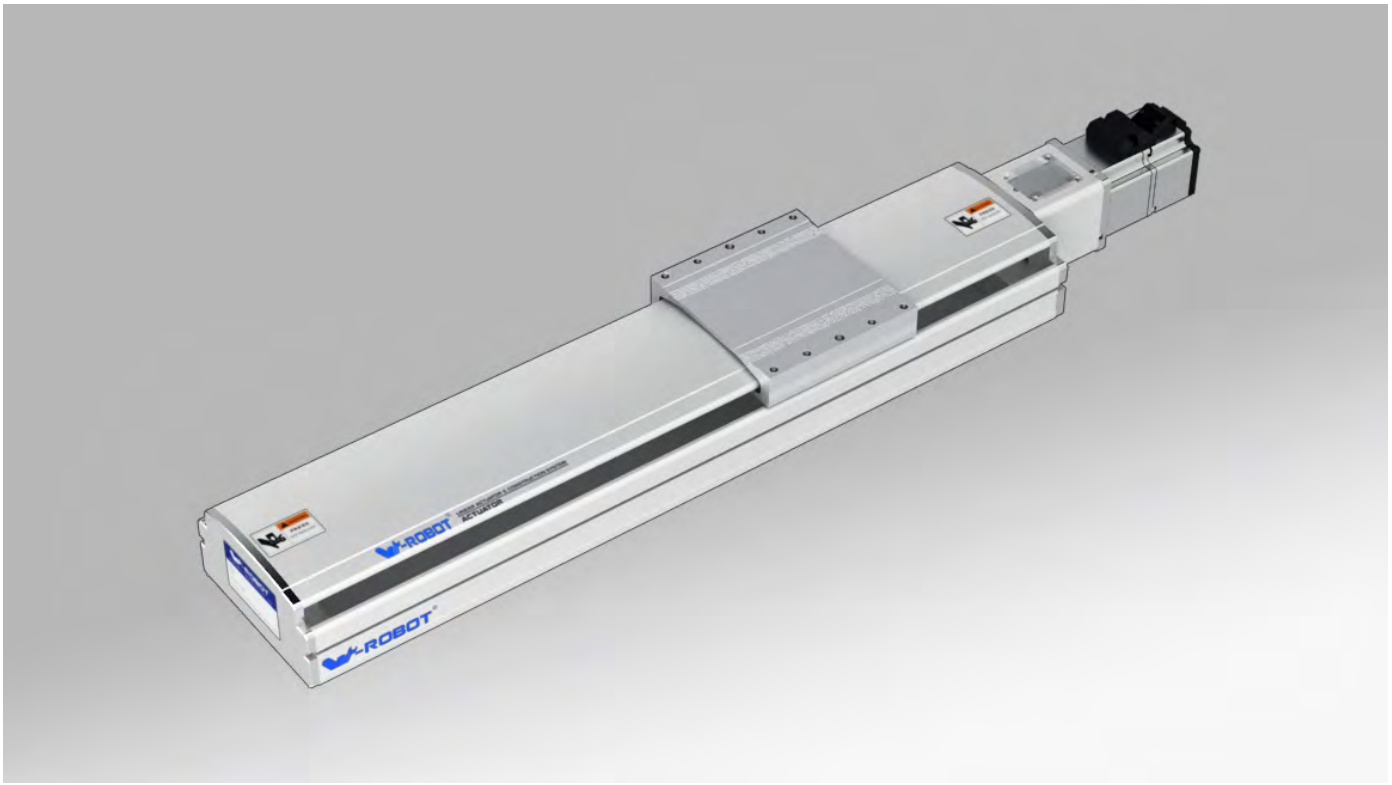

Motor direction

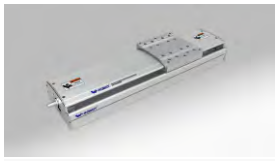

BA

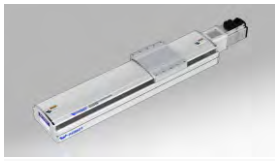

BC

BL

BR

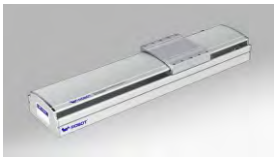

M

Guide for Model Selection

VF17 — L20 — P — S100 — BC — ZP75B — C3 — ___

Base Style	
V	Vseries
F	Semiclosed with Frame Ball Screw Drive
17	Body width170

Ball Screw Lead	
L5	5mm
L10	10mm
L20	20mm
L40	40mm

Accuracy class	
P	High precision
C	Common precision

Stroke(mm)
100-1500

Motor way	
BA	Basis
BC	External
BR	Right Side
BL	Left Side
M	Build-In Motor

Motor Type		Motor power	
P	Panasonic	40	400W
M	Mitsubishi	75	750W
Y	Yaskawa	Brakes	
T	Delta	No	No brake
W	W-Robot	B	With brake

* For Z: Motor is from clients

Original Sensor position		Sensor switch	
External		External	
C	Motor side	2	2pcs
D	Oppsite motor side	3	3pcs
E	No	No sensor	

Sensor type	
No	NPN
P	PNP

Non-standard, d.c.,	
No	Standard type
BL1	Detailed information please see page032
B2	
D01	
U01	
UD01	
H01	
HU01	
HD01	
HUD01	
M01	
S01	

Specification

Motor power AC (W)		400W/750W			
BallScrewØ		(C7)	20		
		(C5)	20		
Repeatability		(C7)	±0.01		
		(C5)	±0.006		
BallScrew Lead(mm)		5	10	20	40
MaximumSpeed(mm/sec) 3000 Motor Speed(rpm/mim)		250	500	1000	2000
Maximum Payload(kg)	Horizontal	120/120	105/115	75/83	35/50
	Vertical	45/50	35/40	20/25	5/10
RatedThrust(N)		1388/2563	694/1281	347/640	170/320
Linear Guide (mm)		20x15.5 -2			
Coupling (mm) (Motor side) x (Ball Screw Side)		11x12	14x12	14x12	16x12	19x12
Motor Output		200W		400W	750W
Home Sensor		Outside EE-SX672(NPN) EE-SX672P(PNP)			
		Outside Guide EE-SX674(NPN) EE-SX674P(PNP)			

Wiring drawing of inductor(original point and endpoint)

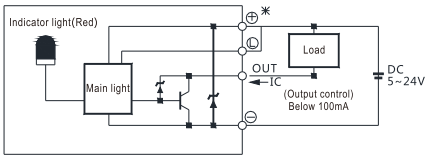

(Figure 1)

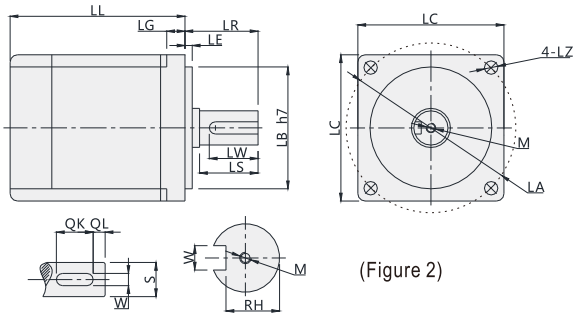

(Figure 2)

* Above repeatability is within strok 300mm,if logner travel needed,it willbe lower.In case stroke over 600 will lead to swing of ball screw,please slow down the speed 15%.Please note figure 2 motor size is same with table 1, or needed to replace coupler and motor holder.)

Servo Motor Matches List

(Table 1)

Servo motor size																			
Power(W)	Brand	Type		LL	LL(Brakes)	LA	LE	LZ	LC	LG	LW	RH	W	LR	S	LB	M	QK	QL
200W	Panasonic	MSMJ022G1□	V:With brake U:No brake	79.5	115.5	70	3	4.5	60	6.5	20	8.5	4h9	30	11h6	50h7	M4x8L	-	-
	Delta	ECMA-C20602□S	S:With brake R:No brake	105.5	141.5	70	3	5.5	60	7.5	20	11	5	30	14h6	50h7	M4x15L	-	-
	Mitsubishi	HC-KFS23□K	B:With brake □:No brake	99.5	131.5	70	3	5.8	62	7	-	-	-	30	14h6	50h7	-	-	-
400W	Panasonic	MSMJ042G1□	V:With brake U:No brake	99	135	70	3	4.5	60	6.5	20	11	5h9	30	14h6	50h7	M5x10L	-	-
	Delta	ECMA-C20604□S	S:With brake R:No brake	130.7	166.6	70	3	5.5	60	7.5	20	11	5	30	14h6	50h7	M4x15L	-	-
		ECMA-C20804□S	S:With brake R:No brake	112.3	152.8	90	3	6.6	80	8	20	11	5	35	14h6	70h7	M4x15L	-	-
	Mitsubishi	HC-KFS43□K	B:With brake □:No brake	124.5	165.5	70	3	5.8	62	7	-	-	-	30	14h6	50h7	-	-	-
750W	Panasonic	MSMJ082G1□	V:With brake U:No brake	122	149	90	3	6	80	8	25	15.5	6h9	35	19h6	70h7	M5x10L	-	-
	Delta	ECMA-C20807□S	S:With brake R:No brake	138.3	178	90	3	6.6	80	8	25	15.5	6	35	19h6	70h7	M6x20L	-	-
		ECMA-C20907□S	S:With brake R:No brake	130.2	161.3	100	3	6.6	86	8	20	13	5	35	16h6	80h7	M5x15L	-	-
	Mitsubishi	HC-KFS73□K	B:With brake □:No brake	142	177.5	90	3	6.6	82	8	-	-	-	40	19h6	70h7	-	-	-

□ Stand for empty

Max. Payload Diameters Table

(Unit : mm)

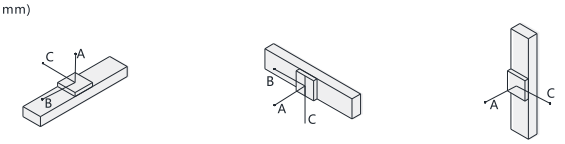

Horizontal installation		A	B	C
Lead 5	60kg	2980	435	577
	100kg	2000	207	331
	120kg	1846	202	269
Lead 10	60kg	2440	428	570
	75kg	2010	253	336
	95kg	1851	207	274
Lead 20	30kg	2652	899	994
	50kg	1775	526	593
	83kg	1396	317	267

Wall installation		A	B	C
Lead 5	60kg	530	350	2438
	100kg	277	165	1995
	120kg	215	118	1836
Lead 10	60kg	533	353	2441
	75kg	293	179	2010
	95kg	230	133	1851
Lead 20	30kg	982	815	2573
	50kg	569	442	1680
	83kg	337	232	1258

Vertical installation		A	C
Lead 5	20kg	1510	1220
	30kg	1210	990
	50kg	992	962
Lead 10	15kg	1778	1778
	25kg	1050	1050
	40kg	750	750
Lead 20	5kg	1700	1700
	10kg	2202	2202
	25kg	1485	1485

Max. Static Torque Table

(Unit : N.m)

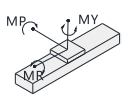

Maximum static torque	
MY	1032
MP	1034
MR	908

BA: Basis

Unit (mm)

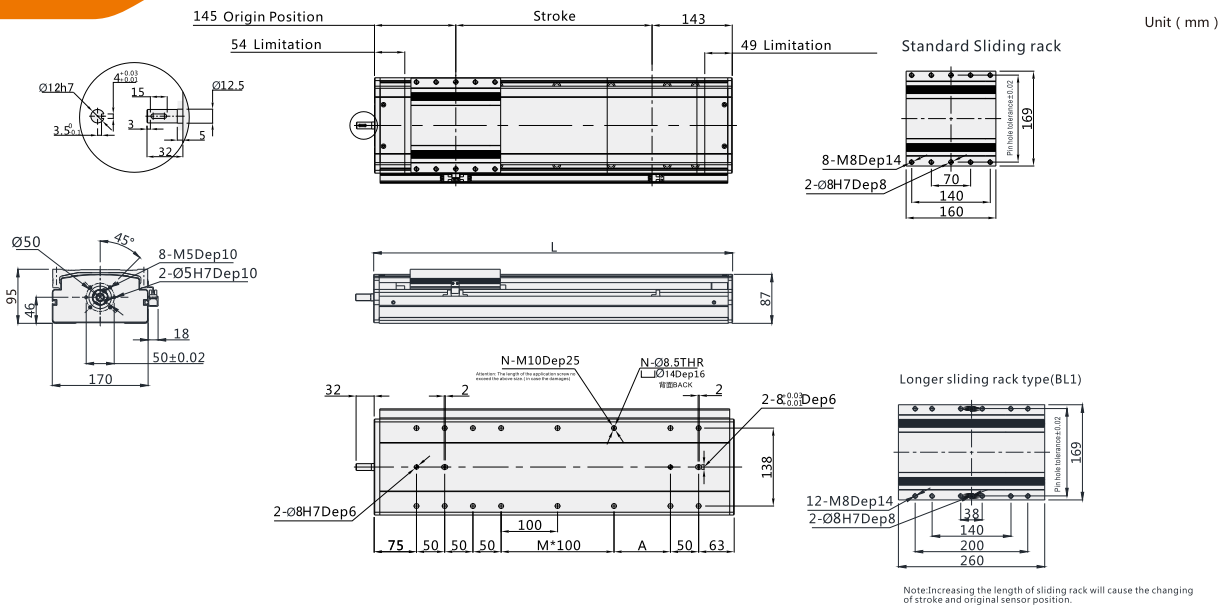

Note: Not including motor weight , in case special stroke please contact technical services. .

Working Stroke	100	150	200	250	300	350	400	450	500	550	600	650	700	750	800	850	900	950	1000	1050	1100	1150	1200	1250	1300	1350	1400	1450	1500
L	388	438	488	538	588	638	688	738	788	838	888	938	988	1038	1088	1138	1188	1238	1288	1338	1388	1438	1488	1538	1588	1638	1688	1738	1788
M	0	0	1	1	2	2	3	3	4	4	5	5	6	6	7	7	8	8	9	9	10	10	11	11	12	12	13	13	14
N	12	12	14	14	16	16	18	18	20	20	22	22	24	24	26	26	28	28	30	30	32	32	34	34	36	36	38	38	40
A	50	100	50	100	50	100	50	100	50	100	50	100	50	100	50	100	50	100	50	100	50	100	50	100	50	100	50	100	50
Weight KG	11.4	12.1	12.8	13.5	14.2	14.9	15.6	16.3	17	17.7	18.4	19.1	19.8	20.5	21.2	21.9	22.6	23.3	24	24.7	25.4	26.1	26.8	27.5	28.2	28.9	29.6	30.4	31

*Products with color ▭ are available stock and short lead time.

BC: External

Unit (mm)

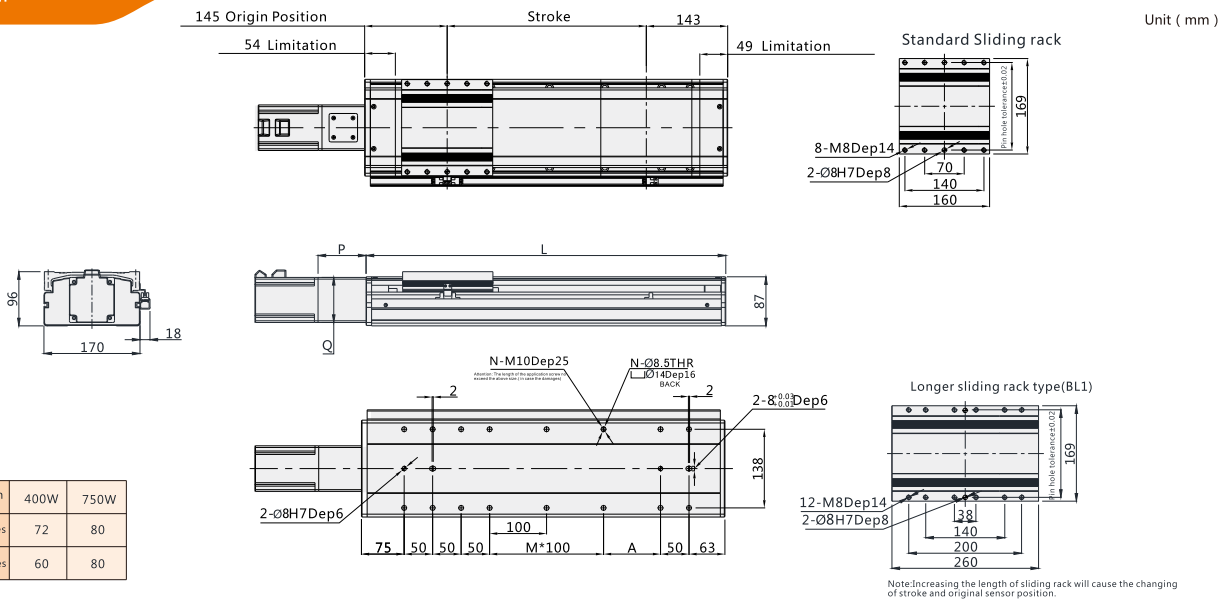

Motor Specification	400W	750W
Corresponding P values	72	80
Corresponding Q values	60	80

Note: Not including motor weight , in case special stroke please contact technical services. .

Working Stroke	100	150	200	250	300	350	400	450	500	550	600	650	700	750	800	850	900	950	1000	1050	1100	1150	1200	1250	1300	1350	1400	1450	1500
L	388	438	488	538	588	638	688	738	788	838	888	938	988	1038	1088	1138	1188	1238	1288	1338	1388	1438	1488	1538	1588	1638	1688	1738	1788
M	0	0	1	1	2	2	3	3	4	4	5	5	6	6	7	7	8	8	9	9	10	10	11	11	12	12	13	13	14
N	12	12	14	14	16	16	18	18	20	20	22	22	24	24	26	26	28	28	30	30	32	32	34	34	36	36	38	38	40
A	50	100	50	100	50	100	50	100	50	100	50	100	50	100	50	100	50	100	50	100	50	100	50	100	50	100	50	100	50
Weight KG	12.1	12.8	13.5	14.2	14.9	15.6	16.3	17	17.7	18.4	19.1	19.8	20.5	21.2	21.9	22.6	23.3	24	24.7	25.4	26.1	26.8	27.5	28.2	28.9	29.6	30.4	31	31.7

*Products with color ▭ are available stock and short lead time.

BL: Left Side

Unit (mm)

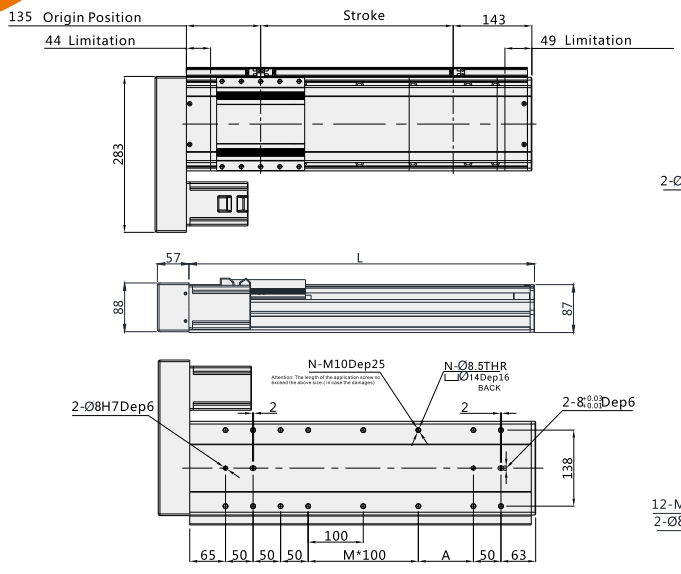

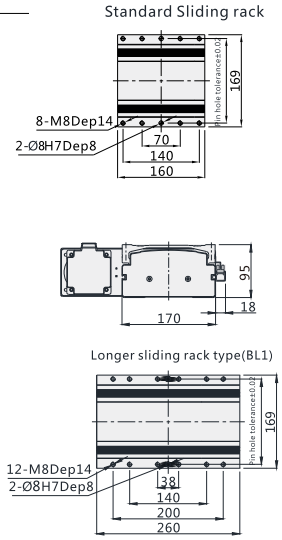

Note:Increasing the length of sliding rack will cause the changing of stroke and original sensor position.

Note: Not including motor weight , in case special stroke please contact technical services. .

Working Stroke	100	150	200	250	300	350	400	450	500	550	600	650	700	750	800	850	900	950	1000	1050	1100	1150	1200	1250	1300	1350	1400	1450	1500
L	378	428	478	528	578	628	678	728	778	828	878	928	978	1028	1078	1128	1178	1228	1278	1328	1378	1428	1478	1528	1578	1628	1678	1728	1778
M	0	0	1	1	2	2	3	3	4	4	5	5	6	6	7	7	8	8	9	9	10	10	11	11	12	12	13	13	14
N	12	12	14	14	16	16	18	18	20	20	22	22	24	24	26	26	28	28	30	30	32	32	34	34	36	36	38	38	40
A	50	100	50	100	50	100	50	100	50	100	50	100	50	100	50	100	50	100	50	100	50	100	50	100	50	100	50	100	50
Weight KG	14.1	14.8	15.5	16.2	16.9	17.6	18.3	19	19.7	20.4	21.1	21.8	22.5	23.2	23.9	24.6	25.3	26	26.7	27.4	28.1	28.8	29.5	30.2	30.9	31.6	32.4	33	33.7

*Products with color are available stock and short lead time.

BR: Right Side

Unit (mm)

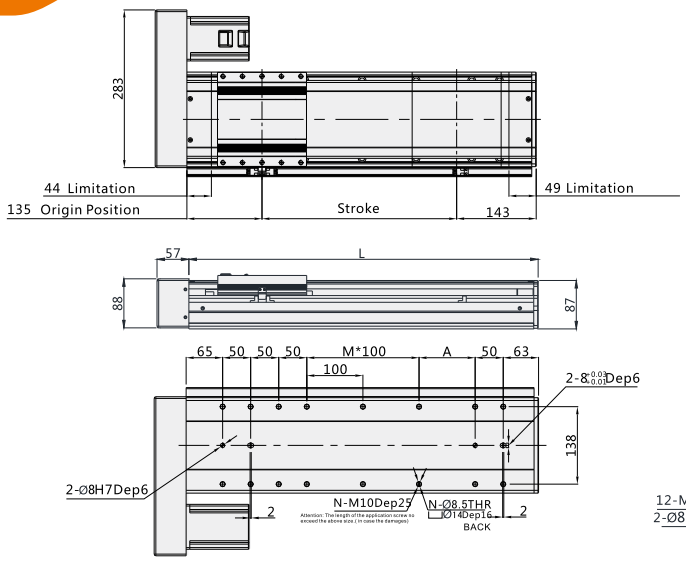

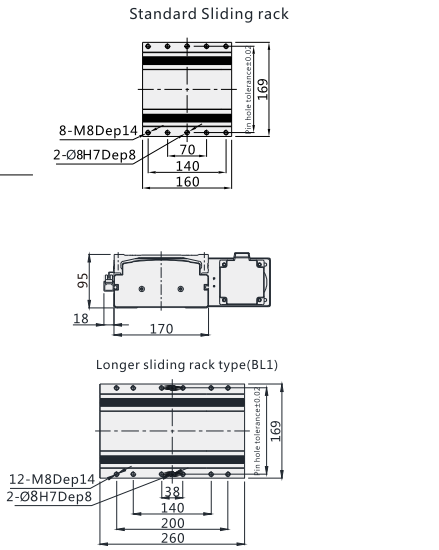

Note:Increasing the length of sliding rack will cause the changing of stroke and original sensor position.

Note: Not including motor weight , in case special stroke please contact technical services. .

Working Stroke	100	150	200	250	300	350	400	450	500	550	600	650	700	750	800	850	900	950	1000	1050	1100	1150	1200	1250	1300	1350	1400	1450	1500
L	378	428	478	528	578	628	678	728	778	828	878	928	978	1028	1078	1128	1178	1228	1278	1328	1378	1428	1478	1528	1578	1628	1678	1728	1778
M	0	0	1	1	2	2	3	3	4	4	5	5	6	6	7	7	8	8	9	9	10	10	11	11	12	12	13	13	14
N	12	12	14	14	16	16	18	18	20	20	22	22	24	24	26	26	28	28	30	30	32	32	34	34	36	36	38	38	40
A	50	100	50	100	50	100	50	100	50	100	50	100	50	100	50	100	50	100	50	100	50	100	50	100	50	100	50	100	50
Weight KG	14.1	14.8	15.5	16.2	16.9	17.6	18.3	19	19.7	20.4	21.1	21.8	22.5	23.2	23.9	24.6	25.3	26	26.7	27.4	28.1	28.8	29.5	30.2	30.9	31.6	32.4	33	33.7

*Products with color are available stock and short lead time.

M: Buil-in

Unit (mm)

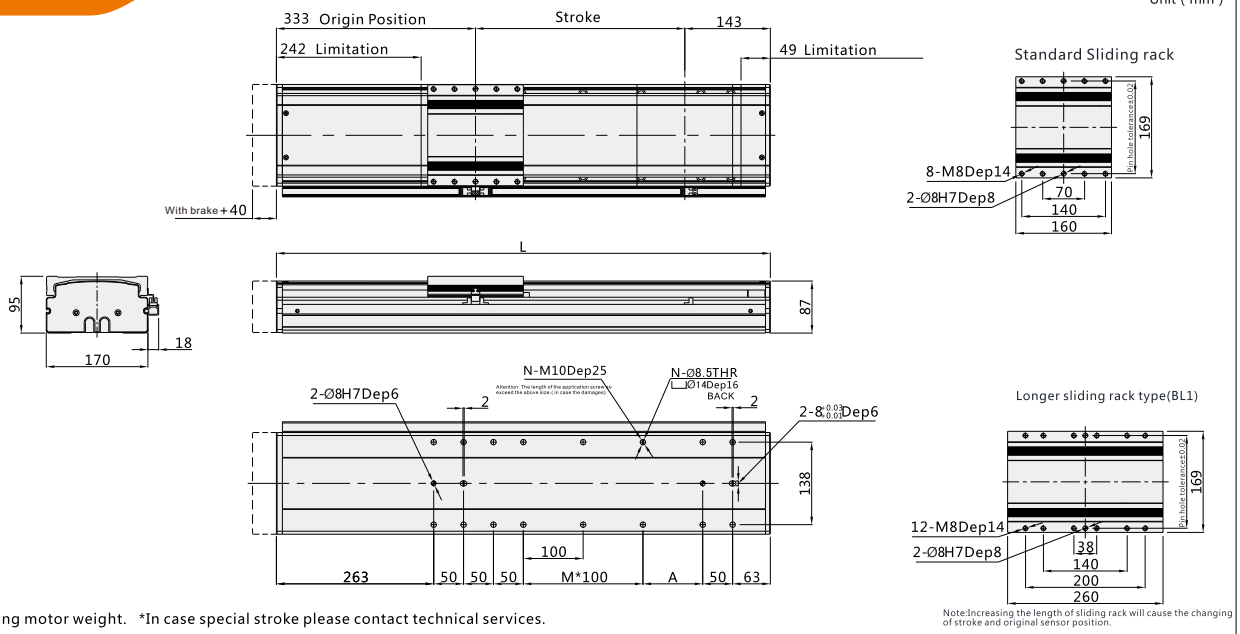

Note: Not including motor weight. *In case special stroke please contact technical services.

Working Stroke	100	150	200	250	300	350	400	450	500	550	600	650	700	750	800	850	900	950	1000	1050	1100	1150	1200	1250	1300	1350	1400	1450	1500
L	576	626	676	726	776	826	876	926	976	1026	1076	1126	1176	1226	1276	1326	1376	1426	1476	1526	1576	1626	1676	1726	1776	1826	1876	1926	1976
M	0	0	1	1	2	2	3	3	4	4	5	5	6	6	7	7	8	8	9	9	10	10	11	11	12	12	13	13	14
N	12	12	14	14	16	16	18	18	20	20	22	22	24	24	26	26	28	28	30	30	32	32	34	34	36	36	38	38	40
A	50	100	50	100	50	100	50	100	50	100	50	100	50	100	50	100	50	100	50	100	50	100	50	100	50	100	50	100	50
Weight KG	12.8	13.5	14.2	14.9	15.6	16.3	17	17.7	18.4	19.1	19.8	20.5	21.2	21.9	22.6	23.3	24	24.7	25.4	26.1	26.8	27.5	28.2	28.9	29.6	30.3	31	31.7	32.4

*Products with color ▭ are available stock and short lead time.

VF22

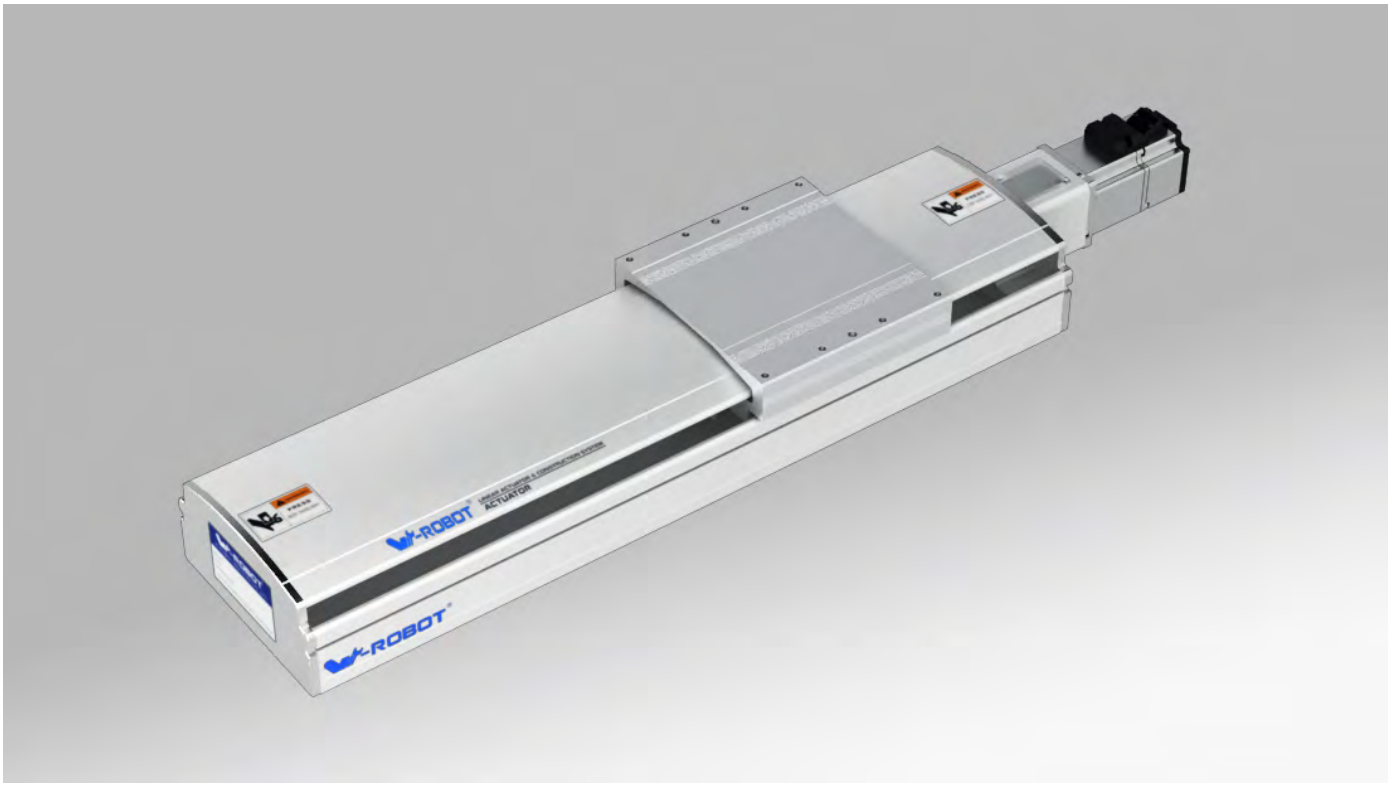

Motor direction

BA

BC

BL

BR

M

Guide for Model Selection

VF22 – L25 – P – S100 – BC – ZP75B – C3 – ____

Base Style	
V	V series
F	Semiclosed with Frame Ball Screw Drive
22	Body width220

Ball Screw Lead	
L5	5mm
L10	10mm
L25	25mm

Accuracy class	
P	High precision
C	Common precision

Stroke(mm)
100-1500

Motor way	
BA	Basis
BC	External
BR	Right Side
BL	Left Side
M	Build-In Motor

Motor Type	
P	Panasonic
M	Mitsubishi
Y	Yaskawa
T	Delta
W	W-Robot

* For Z: Motor is from clients

Motor power	
40	400W
75	750W
Brakes	
No	No brake
B	With brake

Original Sensor position		Sensor switch	
External		External	
C	Motor side	2	2pcs
D	Oppsite motor side	3	3pcs
E	No	No sensor	

Sensor type	
No	NPN
P	PNP

Non-standard, d.c.,	
No	Standard type
BL1	Detailed information please see page032
B2	
D01	
U01	
UD01	
H01	
HU01	
HD01	
HUD01	
M01	
S01	

Specification

Motor power AC (W)		750W		
BallScrewØ(mm)		(C7)	25	
		(C5)	25	
Repeatability(mm)		(C7)	±0.01	
		(C5)	±0.006	
BallScrew Lead(mm)		5	10	25
MaximumSpeed(mm/sec) 3000 Motor Speed(rpm/mim)		250	500	1250
Maximum Payload(kg)	Horizontal	150	140	120
	Vertical	65	54	25
RatedThrust(N)		2100	1050	420
Linear Guide (mm)		23x18 -2		
Coupling (mm) (Motor side) x (Ball Screw Side)		19x16		
Motor Output		750W		
Home Sensor		Outside	EE-SX672(NPN)	EE-SX672P(PNP)
		Outside Guide	EE-SX674(NPN)	EE-SX674P(PNP)

Wiring drawing of inductor(original point and endpoint)

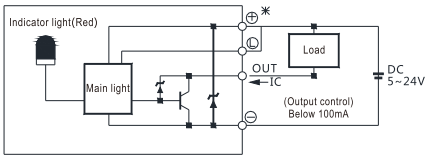

(Figure 1)

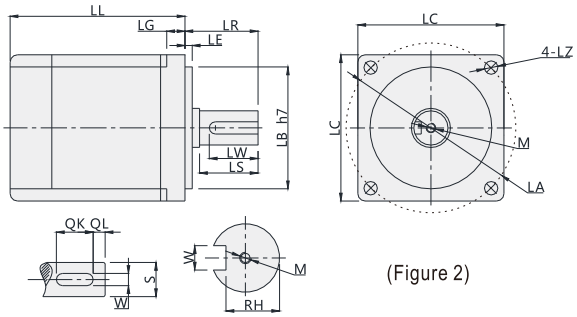

(Figure 2)

* Above repeatability is within strok 300mm,if logner travel needed,it willbe lower.In case stroke over 600 will lead to swing of ball screw,please slow down the speed 15%.Please note figure 2 motor size is same with table 1, or needed to replace coupler and motor holder.)

Servo Motor Matches List

(Table 1)

Servo motor size																			
Power(W)	Brand	Type		LL	LL(Brakes)	LA	LE	LZ	LC	LG	LW	RH	W	LR	S	LB	M	QK	QL
750W	Panasonic	MSMJ082G1□	V:With brake U:No brake	122	149	90	3	6	80	8	25	15.5	6h9	35	19h6	70h7	M5x10L	-	-
	Delta	ECMA-C20807□S	S:With brake R:No brake	138.3	178	90	3	6.6	80	8	25	15.5	6	35	19h6	70h7	M6x20L	-	-
		ECMA-C20907□S	S:With brake R:No brake	130.2	161.3	100	3	6.6	86	8	20	13	5	35	16h6	80h7	M5x15L	-	-
	Mitsubishi	HC-KFS73□K	B:With brake □:No brake	142	177.5	90	3	6.6	82	8	-	-	-	40	19h6	70h7	-	-	-

□ Stand for empty

Max. Payload Diameters Table

(Unit : mm)

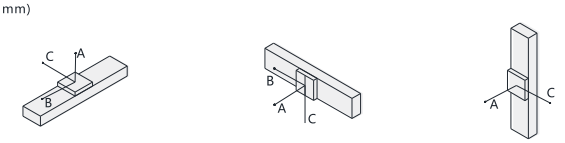

Horizontal installation		A	B	C
Lead 5	60kg	3672	653	866
	100kg	3000	370	497
	150kg	2493	273	363
Lead 10	60kg	2652	899	994
	100kg	1775	526	593
	150kg	1396	317	267
Lead 25	50kg	2862	956	1191
	80kg	2412	581	773
	120kg	2025	373	556

Wall installation		A	B	C
Lead 5	60kg	795	525	3657
	100kg	416	248	2993
	150kg	290	159	2479
Lead 10	60kg	982	815	2573
	100kg	569	442	1680
	150kg	337	232	1258
Lead 25	50kg	1207	879	2862
	80kg	779	504	2412
	120kg	515	295	2025

Vertical installation		A	C
Lead 5	30kg	2688	2688
	50kg	1893	1893
	70kg	1640	1640
Lead 10	20kg	2297	2297
	30kg	1518	1518
	45kg	999	999
Lead 25	15kg	2767	2767
	20kg	2100	2100
	25kg	1702	1702

Max. Static Torque Table

(Unit : N.m)

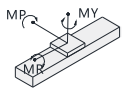

Maximum static torque	
MY	2052
MP	2052
MR	1810

BA: Basis

Unit (mm)

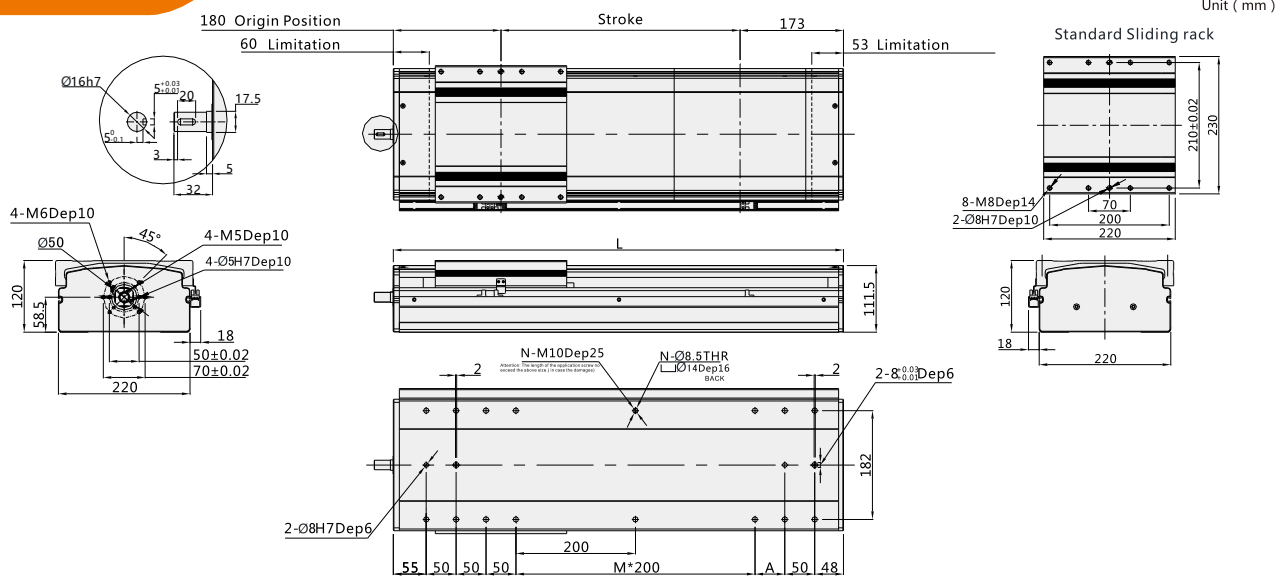

Note: Not including motor weight. *In case special stroke please contact technical services.

Working Stroke	100	150	200	250	300	350	400	450	500	550	600	650	700	750	800	850	900	950	1000	1050	1100	1150	1200	1250	1300	1350	1400	1450	1500
L	453	503	553	603	653	703	753	803	853	903	953	1003	1053	1103	1153	1203	1253	1303	1353	1403	1453	1503	1553	1603	1653	1703	1753	1803	1853
M	0	0	1	1	1	1	2	2	2	2	3	3	3	3	4	4	4	4	5	5	5	5	6	6	6	6	7	7	7
N	12	12	14	14	14	14	16	16	16	16	18	18	18	18	20	20	20	20	22	22	22	22	24	24	24	24	26	26	26
A	150	200	50	100	150	200	50	100	150	200	50	100	150	200	50	100	150	200	50	100	150	200	50	100	150	200	50	100	150
Weight KG	16.2	18.4	20.7	22.9	24.1	25.3	26.6	27.8	29	30.2	31.4	32.7	33.9	35.1	36.3	37.5	38.8	40	41.2	42.4	43.6	44.9	46.1	47.3	48.5	49.7	51	52.2	53.4

*Products with color ▭ are available stock and short lead time.

BC: External

Unit (mm)

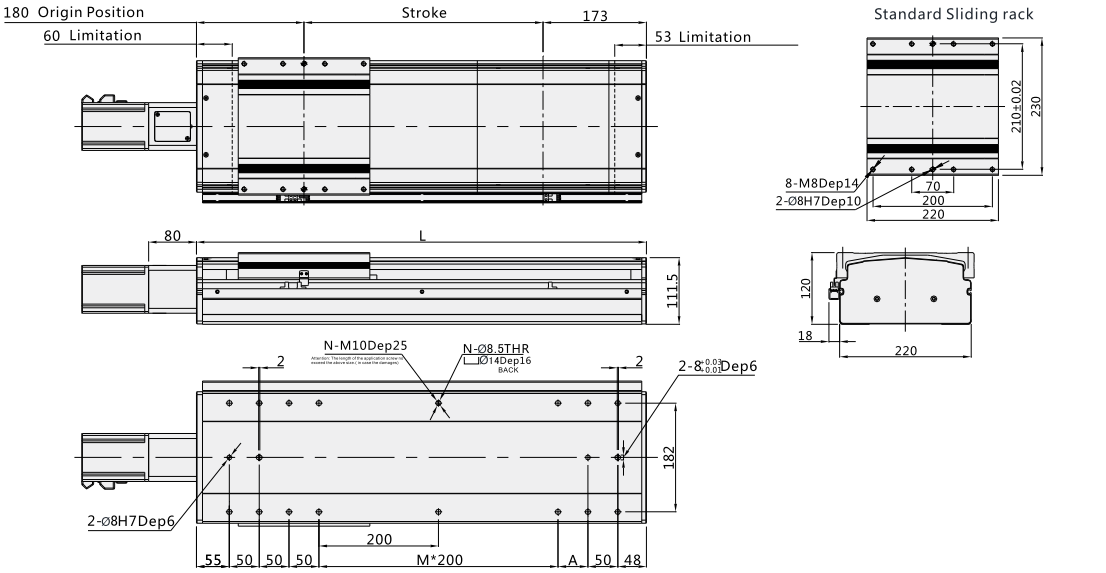

Note: Not including motor weight. *In case special stroke please contact technical services.

Working Stroke	100	150	200	250	300	350	400	450	500	550	600	650	700	750	800	850	900	950	1000	1050	1100	1150	1200	1250	1300	1350	1400	1450	1500
L	453	503	553	603	653	703	753	803	853	903	953	1003	1053	1103	1153	1203	1253	1303	1353	1403	1453	1503	1553	1603	1653	1703	1753	1803	1853
M	0	0	1	1	1	1	2	2	2	2	3	3	3	3	4	4	4	4	5	5	5	5	6	6	6	6	7	7	7
N	12	12	14	14	14	14	16	16	16	16	18	18	18	18	20	20	20	20	22	22	22	22	24	24	24	24	26	26	26
A	150	200	50	100	150	200	50	100	150	200	50	100	150	200	50	100	150	200	50	100	150	200	50	100	150	200	50	100	150
Weight KG	18.4	20.7	22.9	24.1	25.3	26.6	27.8	29	30.2	31.4	32.7	33.9	35.1	36.3	37.5	38.8	40	41.2	42.4	43.6	44.9	46.1	47.3	48.5	49.7	51	52.2	53.4	54.6

*Products with color ▭ are available stock and short lead time.

BL: Left Side

Unit (mm)

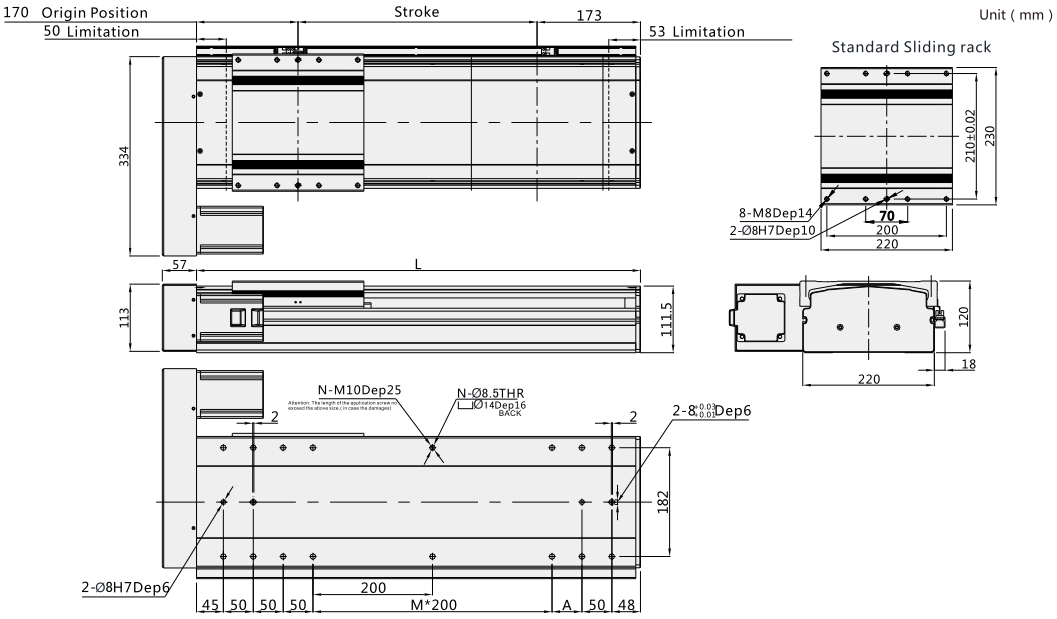

Note: Not including motor weight. *In case special stroke please contact technical services.

Working Stroke	100	150	200	250	300	350	400	450	500	550	600	650	700	750	800	850	900	950	1000	1050	1100	1150	1200	1250	1300	1350	1400	1450	1500
L	443	493	543	593	643	693	743	793	843	893	943	993	1043	1093	1143	1193	1243	1293	1343	1393	1443	1493	1543	1593	1643	1693	1743	1793	1843
M	0	0	1	1	1	1	2	2	2	2	3	3	3	3	4	4	4	4	5	5	5	5	6	6	6	6	7	7	7
N	12	12	14	14	14	14	16	16	16	16	18	18	18	18	20	20	20	20	22	22	22	22	24	24	24	24	26	26	26
A	150	200	50	100	150	200	50	100	150	200	50	100	150	200	50	100	150	200	50	100	150	200	50	100	150	200	50	100	150
Weight KG	18.4	20.7	22.9	24.1	25.3	26.6	27.8	29	30.2	31.4	32.7	33.9	35.1	36.3	37.5	38.8	40	41.2	42.4	43.6	44.9	46.1	47.3	48.5	49.7	51	52.2	53.4	54.6

*Products with color ▭ are available stock and short lead time.

BR: Right Side

Unit (mm)

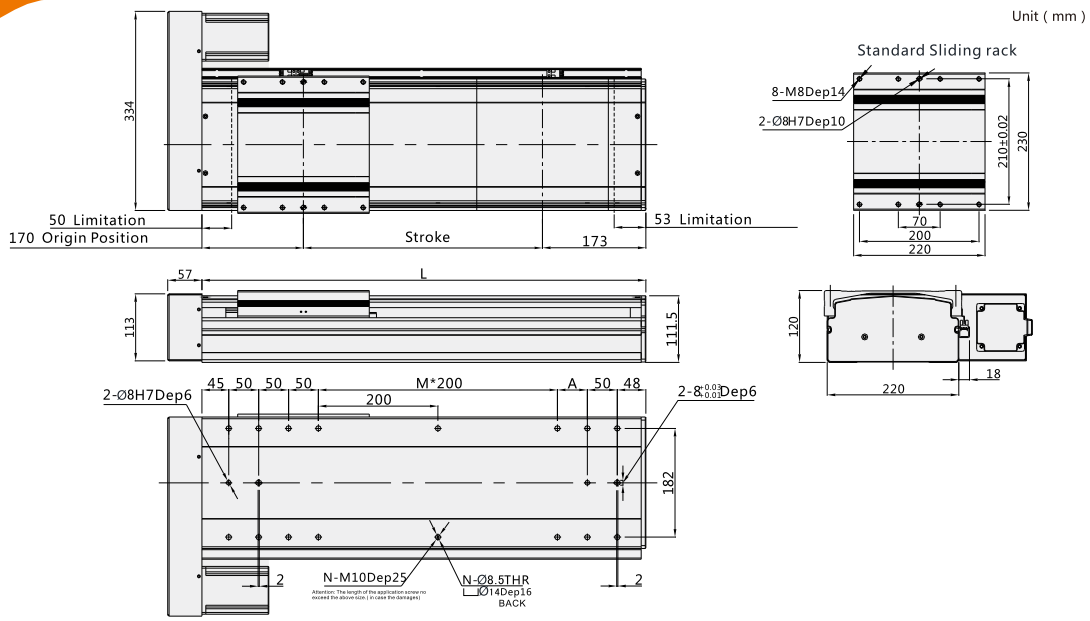

Note: Not including motor weight. *In case special stroke please contact technical services.

Working Stroke	100	150	200	250	300	350	400	450	500	550	600	650	700	750	800	850	900	950	1000	1050	1100	1150	1200	1250	1300	1350	1400	1450	1500
L	443	493	543	593	643	693	743	793	843	893	943	993	1043	1093	1143	1193	1243	1293	1343	1393	1443	1493	1543	1593	1643	1693	1743	1793	1843
M	0	0	1	1	1	1	2	2	2	2	3	3	3	3	4	4	4	4	5	5	5	5	6	6	6	6	7	7	7
N	12	12	14	14	14	14	16	16	16	16	18	18	18	18	20	20	20	20	22	22	22	22	24	24	24	24	26	26	26
A	150	200	50	100	150	200	50	100	150	200	50	100	150	200	50	100	150	200	50	100	150	200	50	100	150	200	50	100	150
Weight KG	18.4	20.7	22.9	24.1	25.3	26.6	27.8	29	30.2	31.4	32.7	33.9	35.1	36.3	37.5	38.8	40	41.2	42.4	43.6	44.9	46.1	47.3	48.5	49.7	51	52.2	53.4	54.6

*Products with color ▭ are available stock and short lead time.

M: Buil-in

Unit (mm)

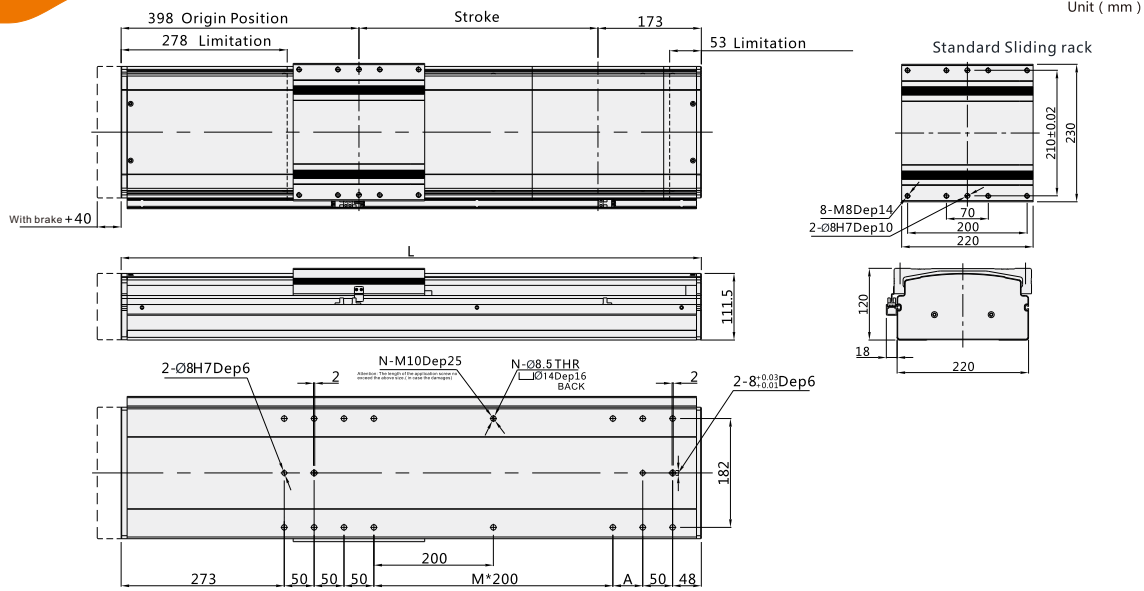

Note: Not including motor weight. *In case special stroke please contact technical services.

Working Stroke	100	150	200	250	300	350	400	450	500	550	600	650	700	750	800	850	900	950	1000	1050	1100	1150	1200	1250	1300	1350	1400	1450	1500
L	671	721	771	821	871	921	971	1021	1071	1121	1171	1221	1271	1321	1371	1421	1471	1521	1571	1621	1671	1721	1771	1821	1871	1921	1971	2021	2071
M	0	0	1	1	1	1	2	2	2	2	3	3	3	3	4	4	4	4	5	5	5	5	6	6	6	6	7	7	7
N	12	12	14	14	14	14	16	16	16	16	18	18	18	18	20	20	20	20	22	22	22	22	24	24	24	24	26	26	26
A	150	200	50	100	150	200	50	100	150	200	50	100	150	200	50	100	150	200	50	100	150	200	50	100	150	200	50	100	150
Weight KG	20.7	22.9	24.1	25.3	26.6	27.8	29	30.2	31.4	32.7	33.9	35.1	36.3	37.5	38.8	40	41.2	42.4	43.6	44.9	46.1	47.3	48.5	49.7	51	52.2	53.4	54.6	55.8

*Products with color ▭ are available stock and short lead time.

Linear Stage Series

Ball Screw Drive
Dust-free Environment

Small Type

VC6

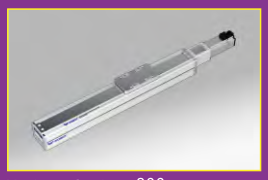

Maximum Stroke 800mm
Maximum Payload 30KG ····· 128
Body Width 60mm

Small Type

VC8

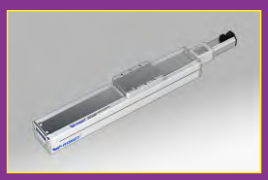

Maximum Stroke 1000mm
Maximum Payload 35KG ····· 132
Body Width 80mm

Standard Type

VC10

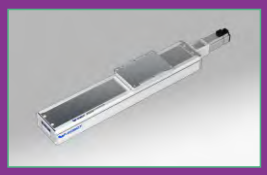

Maximum Stroke 1000mm
Maximum Payload 65KG ····· 136
Body Width 100mm

Standard Type

VC12

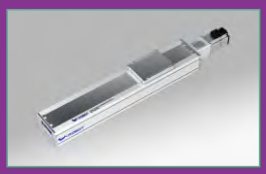

Maximum Stroke 1200mm
Maximum Payload 84KG ····· 142
Body Width 120mm

Standard Type

VC14

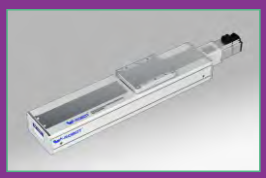

Maximum Stroke 1500mm
Maximum Payload 115KG ····· 148
Body Width 140mm

LargeType

VC17

Heavy loading

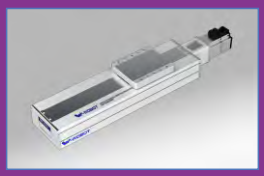

Maximum Stroke 1500mm
Maximum Payload 120KG ····· 154
Body Width 170mm

LargeType

VC22

Heavy loading

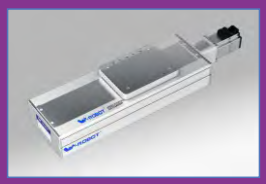

Maximum Stroke 1500mm
Maximum Payload 150KG ····· 160
Body Width 220mm

VC6

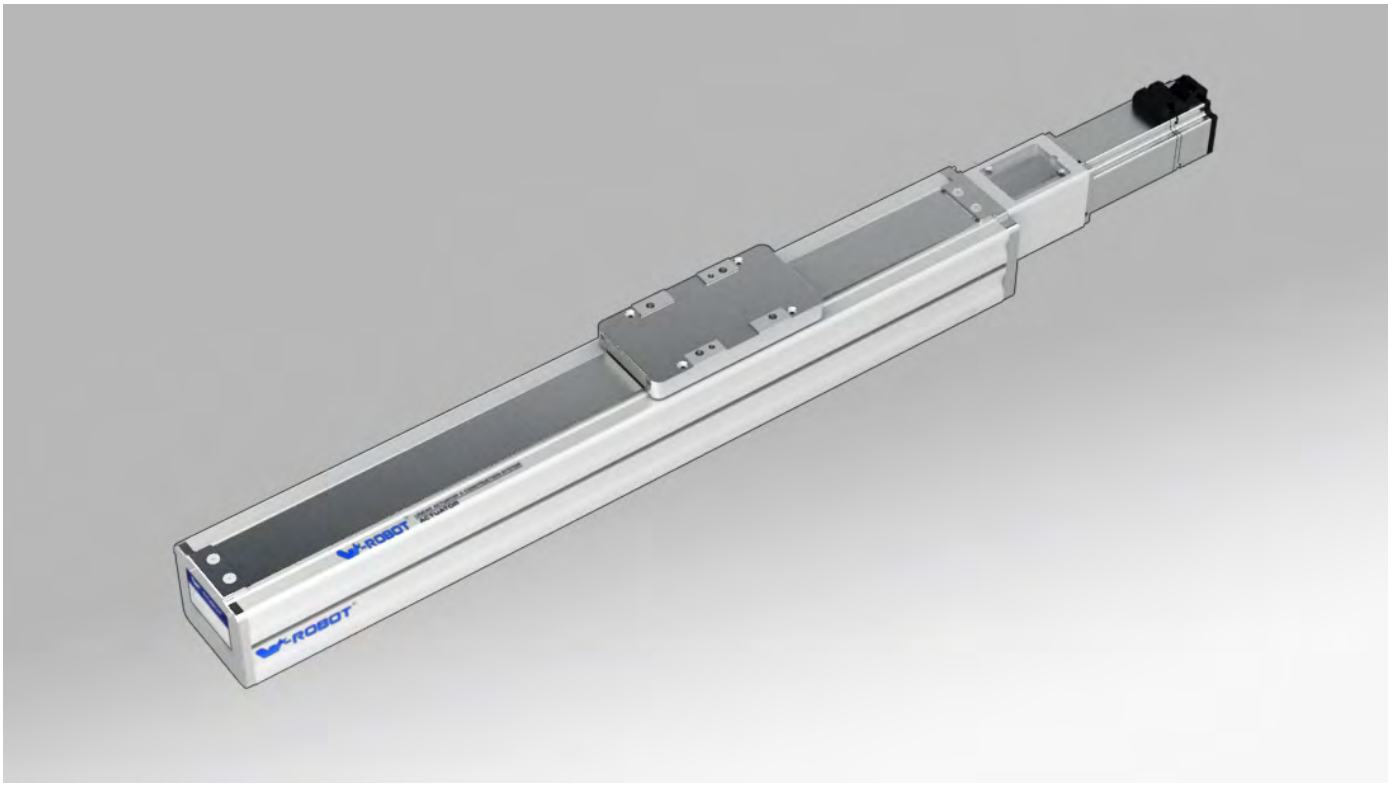

Motor direction

BA

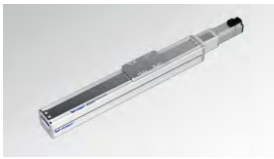

BC

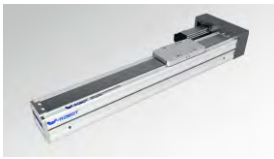

BL

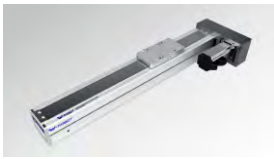

BR

Guide for Model Selection

VC6 – L10 – P – S80 – BC – ZP10B – C3 – ___

Base Style	
V	Vseries
C	Cleanse Fully-enclosed
6	Body width65

Ball Screw Lead	
L5	5mm
L10	10mm

Accuracy class	
P	High precision
C	Common precision

Stroke(mm)
100-800

Motor way	
BA	Basis
BC	External
BR	Right Side
BL	Left Side

Motor Type	
P	Panasonic
T	Delta
W	W-Robot

* For Z: Motor is from clients

Motor power	
10	100W
57	57-Ø8
	57-Ø6.35

Brakes	
No	No brake
B	With brake

Original Sensor position	
External	
C	Motor side
D	Oppsite motor side
E	No

Sensor switch	
External	
2	2pcs
3	3pcs
No sensor	

Sensor type	
No	NPN
P	PNP

Non-standard, d.c.,	
No	Standard type
BL1	Detailed information please see page 032
B2	
D01	
U01	
UD01	
H01	
HU01	
HD01	
HUD01	
M01	
S01	
T	

If the linear satges require the extra sealing strip,please add the "T" at the end of the model numbers.

Specification

Motor power AC (W)		100W	
BallScrewØ		(C7)	12
		(C5)	12
Repeatability		(C7)	±0.01
		(C5)	±0.006
BallScrew Lead(mm)		5	10
MaximumSpeed(mm/sec) 3000 Motor Speed(rpm/mim)		250	500
Maximum Payload(kg)	Horizontal	30	15
	Vertical	10	5
RatedThrust(N)		330	165
Linear Guide (mm)		42x9.5 -1	
Coupling (mm) (Motor side) x (Ball Screw Side)		8x8	
Motor Output		100W	
Home Sensor		Outside EE-SX672(NPN) EE-SX672P(PNP)	
		Outside Guide EE-SX674(NPN) EE-SX674P(PNP)	

Wiring drawing of inductor(original point and endpoint)

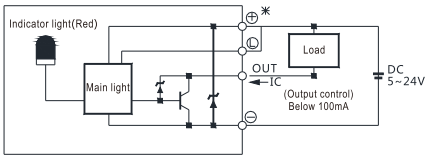

(Figure 1)

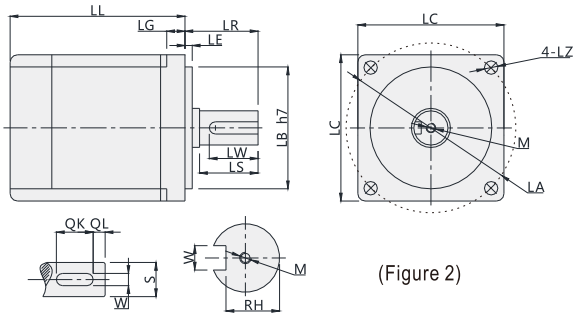

(Figure 2)

* Above repeatability is within strok 300mm,if logner travel needed,it willbe lower.In case stroke over 600 will lead to swing of ball screw,please slow down the speed 15%.Please note figure 2 motor size is same with table 1, or needed to replace coupler and motor holder.)

Servo Motor Matches List

(Table 1)

Servo motor size																			
Power(W)	Brand	Type		LL	LL(Brakes)	LA	LE	LZ	LC	LG	LW	RH	W	LR	S	LB	M	QK	QL
100W	Panasonic	MSMD012G1□	V:With brake U:No brake	92	122	45	3	3.4	38	6	14	6.2	3h9	25	8h6	30h7	M3x6L	-	-
	Delta	ECMA-C20401□S	S:With brake R:No brake	100.6	136.6	46	2.5	4.5	40	5	16	6.2	3	25	8h6	30h7	M3x8L	-	-
	Mitsubishi	HC-KFS12□K	B:With brake □:No brake	86.5	124.5	46	2.5	4.5	42	5	-	-	-	25	8h6	30h7	-	-	-

□ Stand for empty

Max. Payload Diameters Table

(Unit : mm)

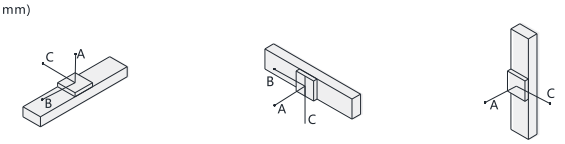

Horizontal installation		A	B	C
Lead 5	10kg	374	33	109
	30kg	159	0	25
Lead 10	3kg	642	125	335
	8kg	273	41	121
	15kg	216	24	77

Wall installation		A	B	C
Lead 5	5kg	204	45	530
	10kg	72	0	245
	30kg	0	0	0
Lead 10	3kg	293	96	510
	8kg	89	14	210
	15kg	43	0	130

Vertical installation		A	C
Lead 5	2kg	171	172
	4kg	73	74
	10kg	23	26
Lead 10	1kg	335	352
	2kg	165	165
	5kg	70	72

Max. Static Torque Table

(Unit : N.m)

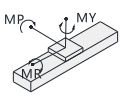

Maximum static torque	
MY	35
MP	40
MR	50

BA: Basis

Unit (mm)

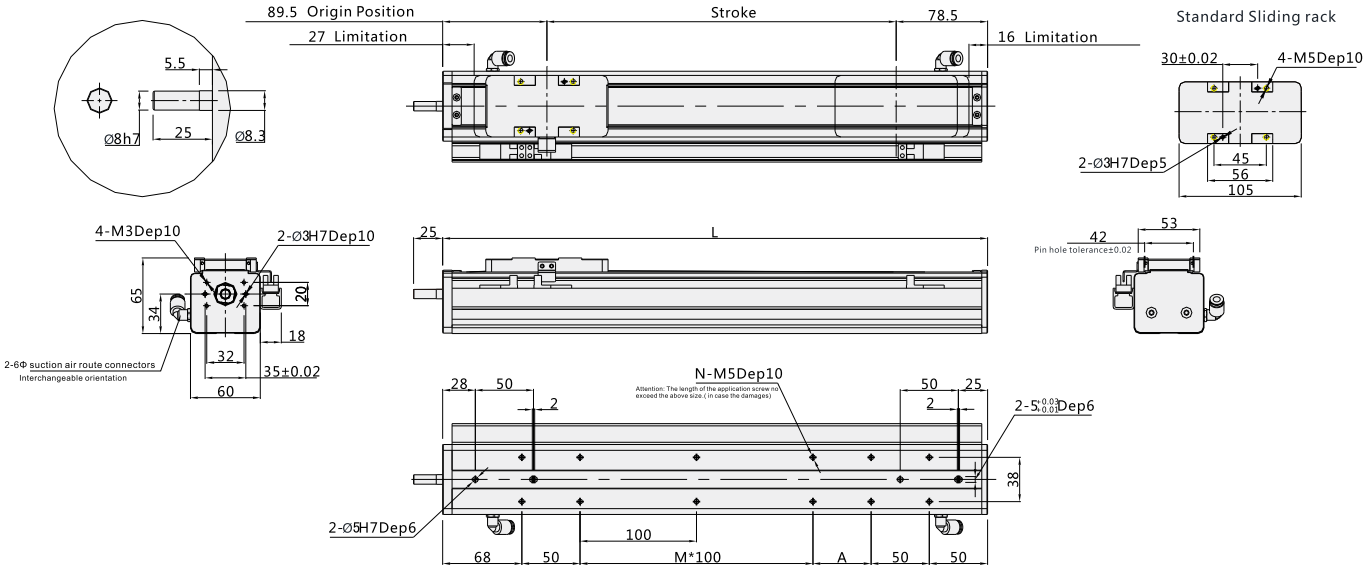

Note: Not including motor weight. *In case special stroke please contact technical services.

Working Stroke	100	150	200	250	300	350	400	450	500	550	600	650	700	750	800
L	268	318	368	418	468	518	568	618	668	718	768	818	868	918	968
M	0	0	1	1	2	2	3	3	4	4	5	5	6	6	7
N	8	8	10	10	12	12	14	14	16	16	18	18	20	20	22
A	50	100	50	100	50	100	50	100	50	100	50	100	50	100	50
Weight KG	2.5	2.8	3.1	3.4	3.7	4	4.3	4.6	4.9	5.2	5.5	5.8	6.1	6.4	6.7

*Products with color ▭ are available stock and short lead time.

BC: External

Unit (mm)

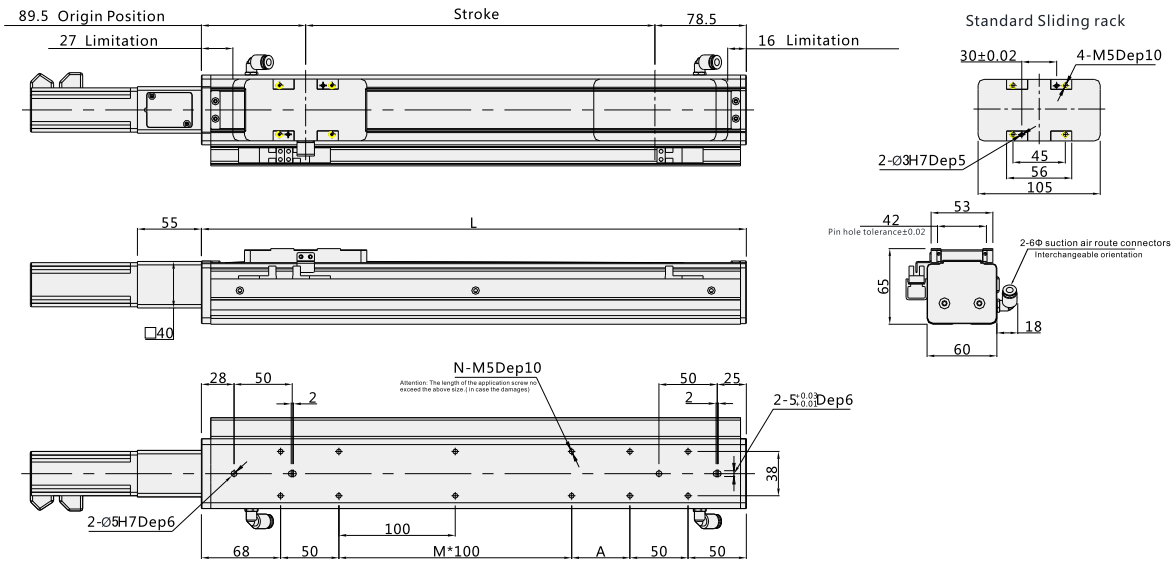

Note: Not including motor weight. *In case special stroke please contact technical services.

Working Stroke	100	150	200	250	300	350	400	450	500	550	600	650	700	750	800
L	268	318	368	418	468	518	568	618	668	718	768	818	868	918	968
M	0	0	1	1	2	2	3	3	4	4	5	5	6	6	7
N	8	8	10	10	12	12	14	14	16	16	18	18	20	20	22
A	50	100	50	100	50	100	50	100	50	100	50	100	50	100	50
Weight KG	2.5	2.8	3.1	3.4	3.7	4	4.3	4.6	4.9	5.2	5.5	5.8	6.1	6.4	6.7

*Products with color ▭ are available stock and short lead time.

BR: Right Side

Unit (mm)

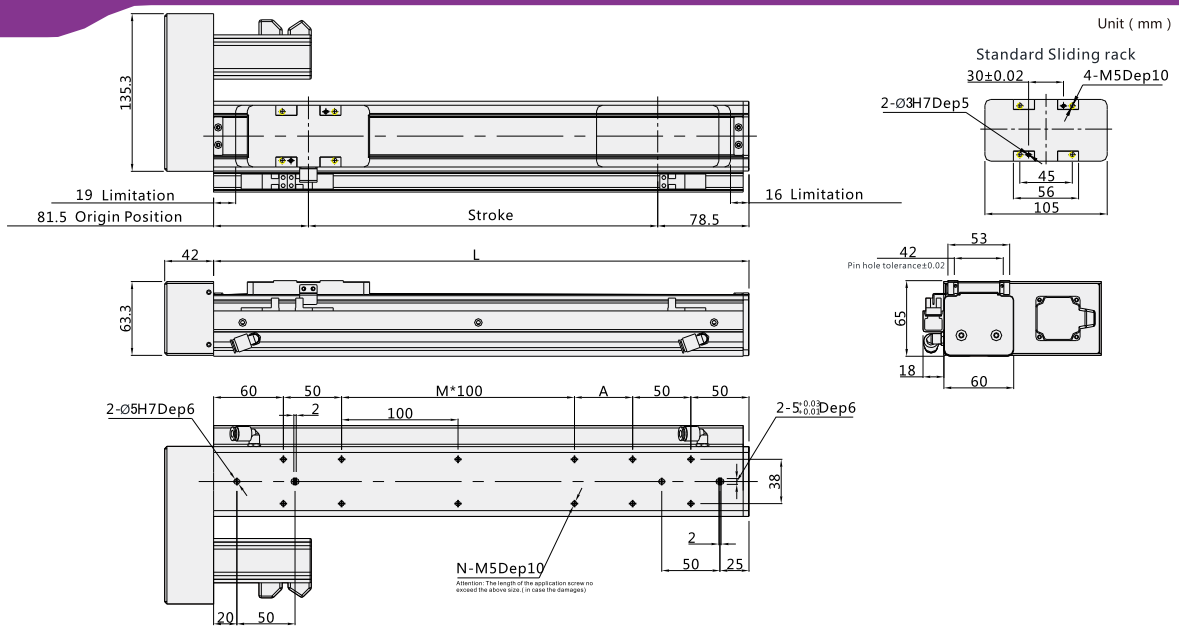

Note: Not including motor weight. *In case special stroke please contact technical services.

Working Stroke	100	150	200	250	300	350	400	450	500	550	600	650	700	750	800
L	260	310	360	410	460	510	560	610	660	710	760	810	860	910	960
M	0	0	1	1	2	2	3	3	4	4	5	5	6	6	7
N	8	8	10	10	12	12	14	14	16	16	18	18	20	20	22
A	50	100	50	100	50	100	50	100	50	100	50	100	50	100	50
Weight KG	2.5	2.8	3.1	3.4	3.7	4	4.3	4.6	4.9	5.2	5.5	5.8	6.1	6.4	6.7

*Products with color ▭ are available stock and short lead time.

BL: Left Side

Unit (mm)

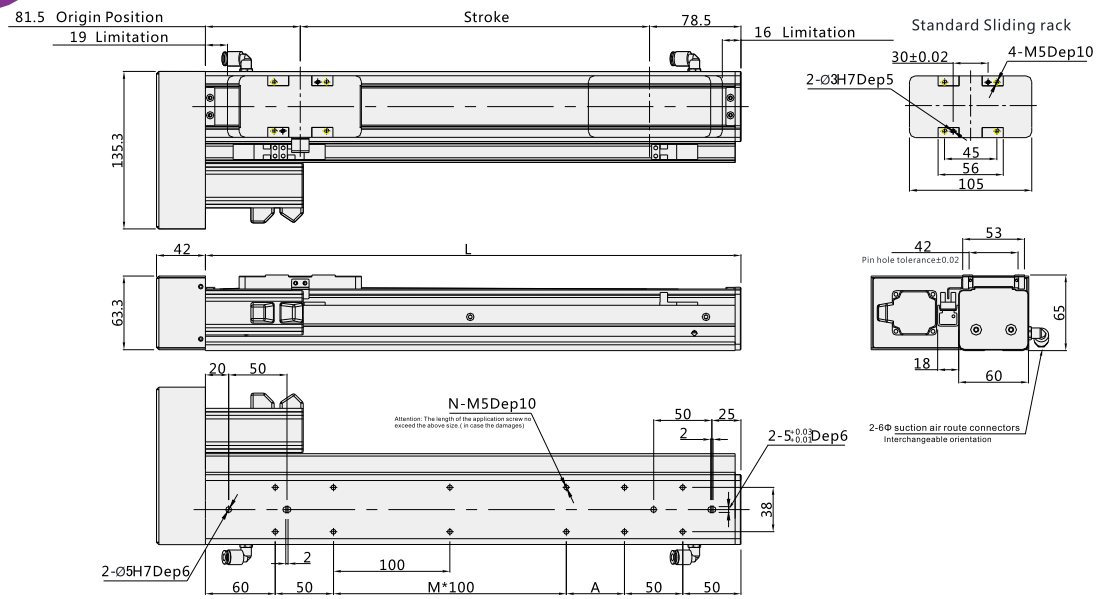

Note: Not including motor weight. *In case special stroke please contact technical services.

Working Stroke	100	150	200	250	300	350	400	450	500	550	600	650	700	750	800
L	260	310	360	410	460	510	560	610	660	710	760	810	860	910	960
M	0	0	1	1	2	2	3	3	4	4	5	5	6	6	7
N	8	8	10	10	12	12	14	14	16	16	18	18	20	20	22
A	50	100	50	100	50	100	50	100	50	100	50	100	50	100	50
Weight KG	2.5	2.8	3.1	3.4	3.7	4	4.3	4.6	4.9	5.2	5.5	5.8	6.1	6.4	6.7

*Products with color ▭ are available stock and short lead time.

VC8

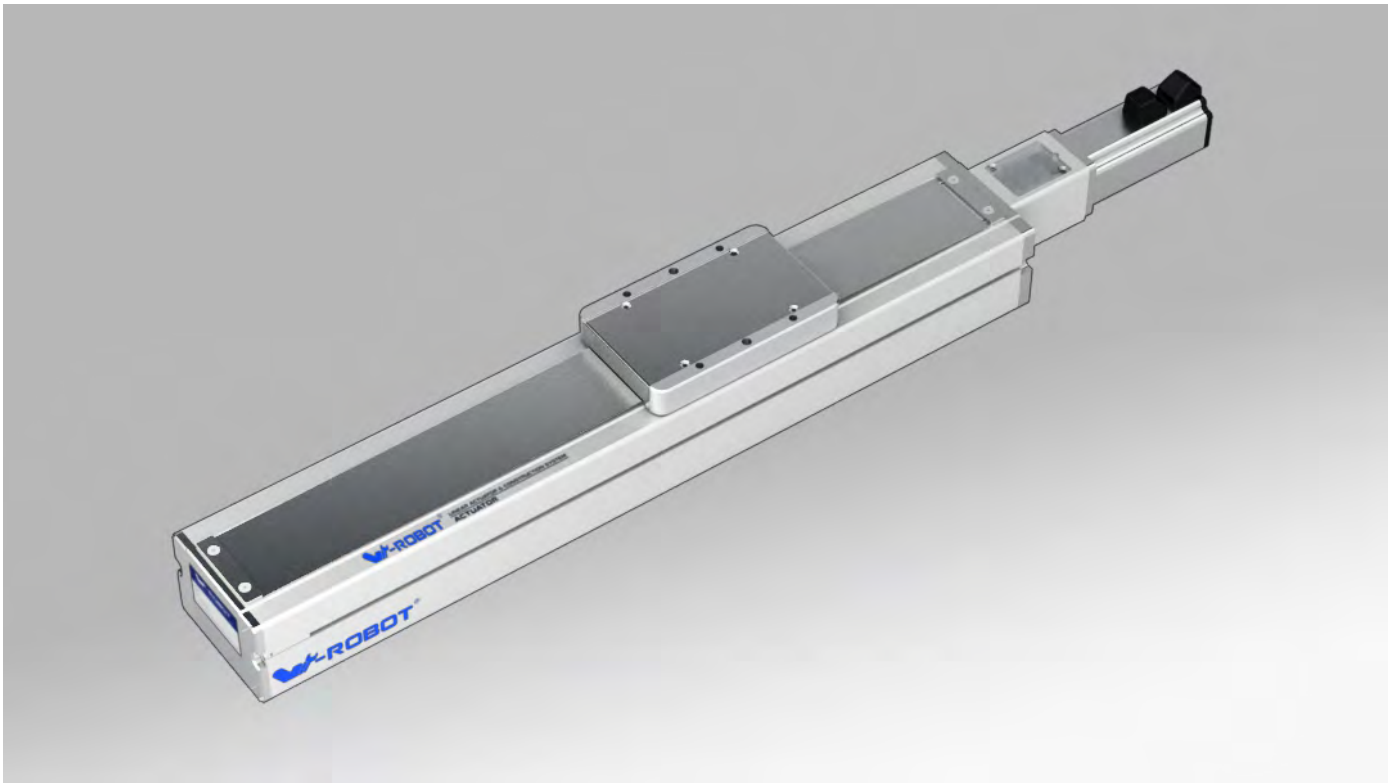

Motor direction

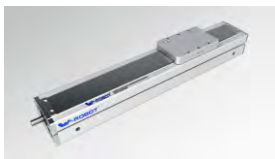

BA

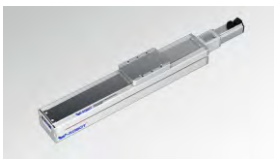

BC

BL

BR

Guide for Model Selection

VC8 — L16 — P — S100 — BC — ZP10B — C3 — ___

Base Style	
V	Vseries
C	Cleanse Fully-enclosed
8	Body width80

Ball Screw Lead	
L5	5mm
L10	10mm
L16	16mm
L20	20mm

Accuracy class	
P	High precision
C	Common precision

Stroke(mm)
100-1000

Motor way	
BA	Basis
BC	External
BR	Right Side
BL	Left Side

Motor Type	
P	Panasonic
M	Mitsubishi
Y	Yaskawa
T	Delta
W	W-Robot

* For Z: Motor is from clients

Motor power	
10	100W
20	200W
40	400W
57	57-Ø8
57	57-Ø6.35

Brakes	
No	No brake
B	With brake

Original Sensor position	
External	
C	Motor side
D	Oppsite motor side
E	No

Sensor switch	
External	
2	2pcs
3	3pcs
No sensor	

Sensor type	
No	NPN
P	PNP

Non-standard, d.c.	
No	Standard type
BL1	Detailed information please see page032
B2	
D01	
U01	
UD01	
H01	
HU01	
HD01	
HUD01	
M01	
S01	
T	

If the linear satges require the extra sealing strip,please add the "T"at the end of the model numbers.

Specification

Motor power AC (W)		100W/200W/400W			
BallScrewØ		(C7)	16		
		(C5)	16		
Repeatability		(C7)	±0.01		
		(C5)	±0.006		
BallScrew Lead(mm)		5	10	16	20
MaximumSpeed(mm/sec) 3000 Motor Speed(rpm/mim)		250	500	800	1000
Maximum Payload(kg)	Horizontal	25/30/35	20/25/30	18/22/27	15/17/22
	Vertical	8/10/12	7/9/11	5/7/9	3/5/6
RatedThrust(N)		330/683/1388	165/341/694	100/213/433	85/174/347
Linear Guide (mm)		42x9.5 -1			
Coupling (mm) (Motor side) x (Ball Screw Side)		8x10	11x10	14x10	14x10
Motor Output		100W	200W		400W
Home Sensor		Outside	EE-SX672(NPN) EE-SX672P(PNP)		
		Outside Guide	EE-SX674(NPN) EE-SX674P(PNP)		

Wiring drawing of inductor(original point and endpoint)

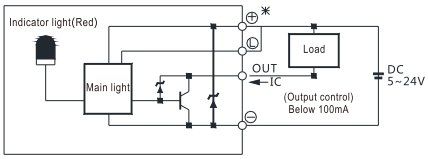

(Figure 1)

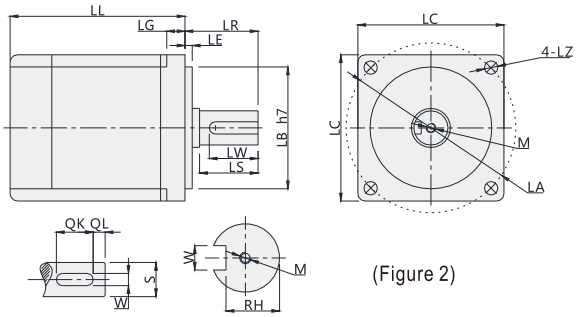

(Figure 2)

* Above repeatability is within strok 300mm,if logner travel needed,it willbe lower.In case stroke over 600 will lead to swing of ball screw,please slow down the speed 15%.Please note figure 2 motor size is same with table 1, or needed to replace coupler and motor holder.)

Servo Motor Matches List

(Table 1)

Servo motor size																			
Power(W)	Brand	Type		LL	LL(Brakes)	LA	LE	LZ	LC	LG	LW	RH	W	LR	S	LB	M	QK	QL
100W	Panasonic	MSMD012G1□	V:With brake U:No brake	92	122	45	3	3.4	38	6	14	6.2	3h9	25	8h6	30h7	M3x6L	-	-
	Delta	ECMA-C20401□S	S:With brake R:No brake	100.6	136.6	46	2.5	4.5	40	5	16	6.2	3	25	8h6	30h7	M3x8L	-	-
	Mitsubishi	HC-KFS12□K	B:With brake □:No brake	86.5	124.5	46	2.5	4.5	42	5	-	-	-	25	8h6	30h7	-	-	-
200W	Panasonic	MSMJ022G1□	V:With brake U:No brake	79.5	115.5	70	3	4.5	60	6.5	20	8.5	4h9	30	11h6	50h7	M4x8L	-	-
	Delta	ECMA-C20602□S	S:With brake R:No brake	105.5	141.5	70	3	5.5	60	7.5	20	11	5	30	14h6	50h7	M4x15L	-	-
	Mitsubishi	HC-KFS23□K	B:With brake □:No brake	99.5	131.5	70	3	5.8	62	7	-	-	-	30	14h6	50h7	-	-	-
400W	Panasonic	MSMJ042G1□	V:With brake U:No brake	99	135	70	3	4.5	60	6.5	20	11	5h9	30	14h6	50h7	M5x10L	-	-
	Delta	ECMA-C20604□S	S:With brake R:No brake	130.7	166.6	70	3	5.5	60	7.5	20	11	5	30	14h6	50h7	M4x15L	-	-
		ECMA-C20804□S	S:With brake R:No brake	112.3	152.8	90	3	6.6	80	8	20	11	5	35	14h6	70h7	M4x15L	-	-
	Mitsubishi	HC-KFS43□K	B:With brake □:No brake	124.5	165.5	70	3	5.8	62	7	-	-	-	30	14h6	50h7	-	-	-

□ Stand for empty

Max. Payload Diameters Table

(Unit : mm)

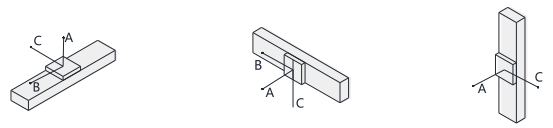

Horizontal installation		A	B	C
Lead 5	15kg	374	33	109
	25kg	159	0	25
	-	-	-	-
Lead 10	4kg	624	125	335
	9kg	273	41	121
	20kg	50	-	-
Lead 16	4kg	737	182	159
	8kg	387	80	97
	18kg	90	30	35

Wall installation		A	B	C
Lead 5	15kg	204	45	530
	25kg	72	0	245
	-	0	0	0
Lead 10	4kg	280	96	500
	9kg	70	10	200
	20kg	30	0	180
Lead 16	4kg	80	30	300
	8kg	15	0	130
	18kg	0	0	0

Vertical installation		A	C
Lead 5	4kg	100	145
	6kg	50	74
	8kg	23	26
Lead 10	3kg	335	350
	5kg	140	160
	7kg	70	72
Lead 16	1kg	372	418
	2kg	166	202
	5kg	113	159

Max. Static Torque Table

(Unit : N.m)

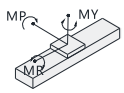

Maximum static torque	
MY	100
MP	100
MR	110

BA: Basis

Unit (mm)

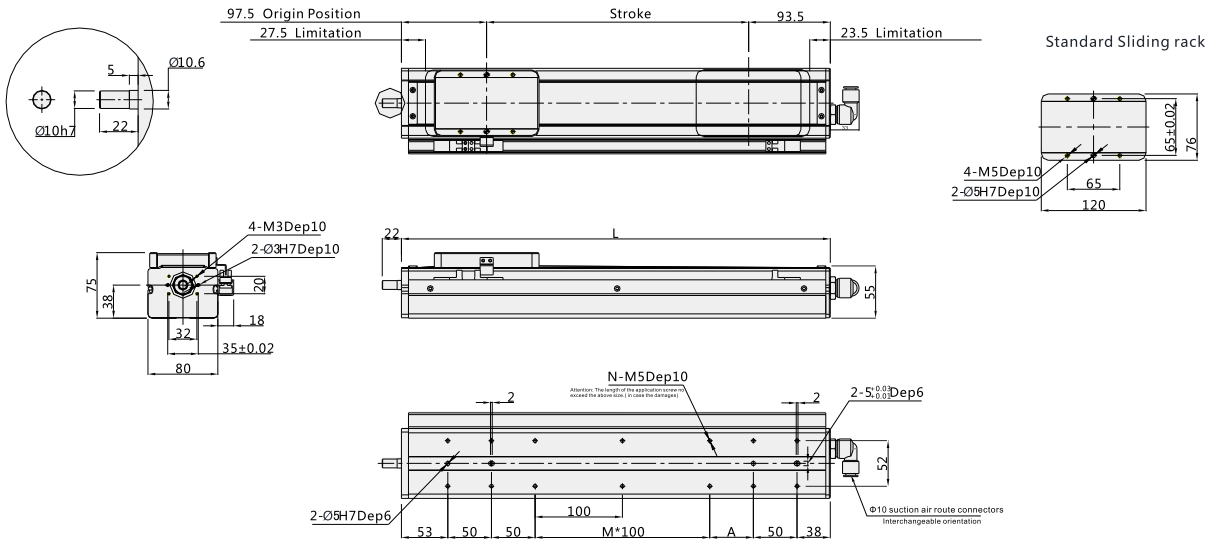

Note: Not including motor weight. *In case special stroke please contact technical services.

Working Stroke	100	150	200	250	300	350	400	450	500	550	600	650	700	750	800	850	900	950	1000	1050
L	291	341	391	441	491	541	591	641	691	741	791	841	891	941	991	1041	1091	1141	1191	1241
M	0	0	1	1	2	2	3	3	4	4	5	5	6	6	7	7	8	8	9	9
N	10	10	12	12	14	14	16	16	18	18	20	20	22	22	24	24	26	26	28	28
A	50	100	50	100	50	100	50	100	50	100	50	100	50	100	50	100	50	100	50	100
Weight KG	3.1	3.5	3.9	4.3	4.7	5.1	5.5	5.9	6.3	6.7	7.1	7.5	7.9	8.3	8.7	9.1	9.5	9.9	10.3	10.7

*Products with color ▭ are available stock and short lead time.

BC: External

Unit (mm)

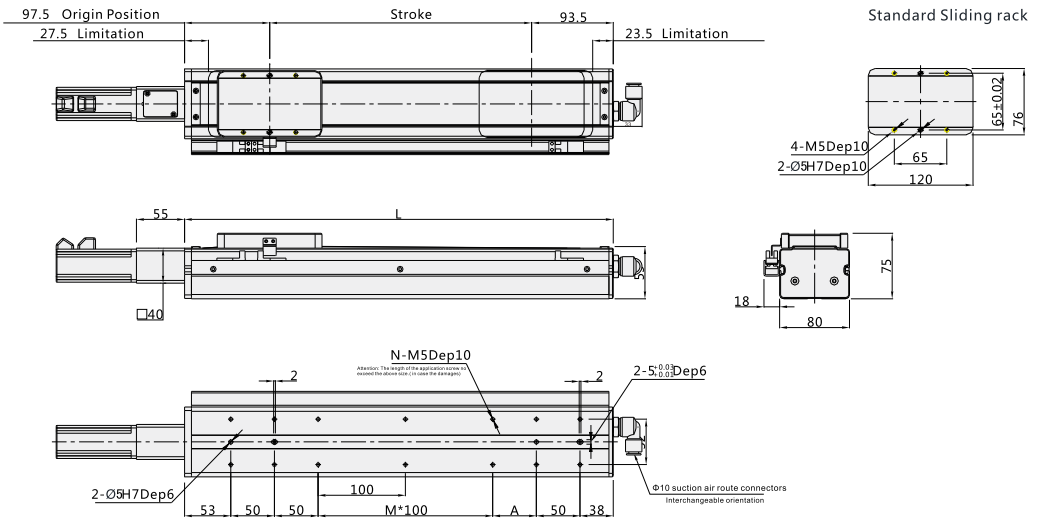

Note: Not including motor weight. *In case special stroke please contact technical services.

Working Stroke	100	150	200	250	300	350	400	450	500	550	600	650	700	750	800	850	900	950	1000	1050
L	291	341	391	441	491	541	591	641	691	741	791	841	891	941	991	1041	1091	1141	1191	1241
M	0	0	1	1	2	2	3	3	4	4	5	5	6	6	7	7	8	8	9	9
N	10	10	12	12	14	14	16	16	18	18	20	20	22	22	24	24	26	26	28	28
A	50	100	50	100	50	100	50	100	50	100	50	100	50	100	50	100	50	100	50	100
Weight KG	3.1	3.5	3.9	4.3	4.7	5.1	5.5	5.9	6.3	6.7	7.1	7.5	7.9	8.3	8.7	9.1	9.5	9.9	10.3	10.7

*Products with color ▭ are available stock and short lead time.

VC8

W-ROBOT® Linear Drives

BL: Left Side

Unit (mm)

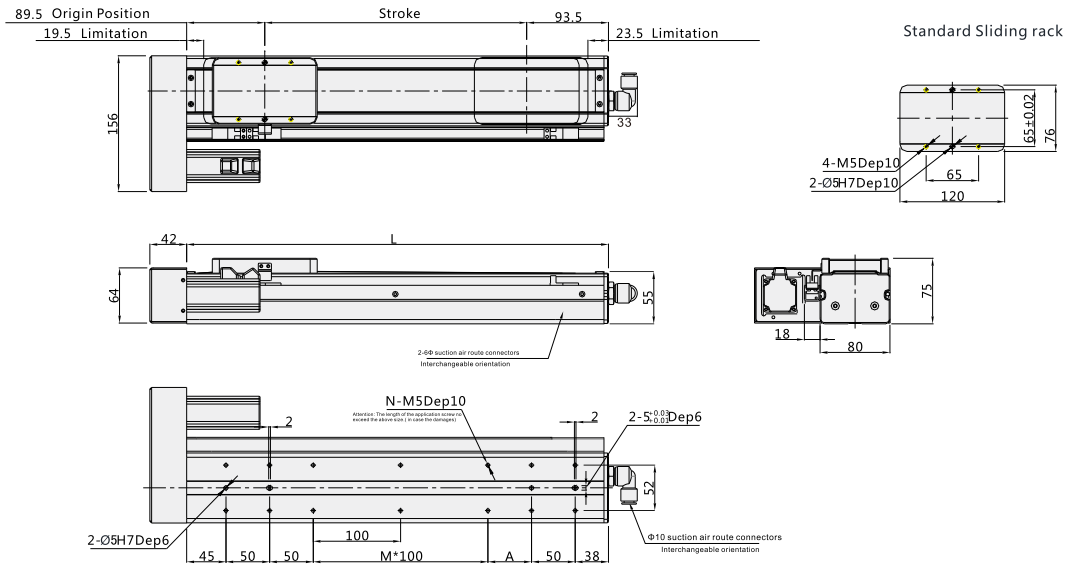

Note: Not including motor weight. *In case special stroke please contact technical services.

Working Stroke	100	150	200	250	300	350	400	450	500	550	600	650	700	750	800	850	900	950	1000	1050
L	283	333	383	433	483	533	583	633	683	733	783	833	883	933	983	1033	1083	1133	1183	1233
M	0	0	1	1	2	2	3	3	4	4	5	5	6	6	7	7	8	8	9	9
N	10	10	12	12	14	14	16	16	18	18	20	20	22	22	24	24	26	26	28	28
A	50	100	50	100	50	100	50	100	50	100	50	100	50	100	50	100	50	100	50	100
Weight KG	4	4.4	4.8	5.2	5.6	6	6.4	6.8	7.2	7.6	8	8.4	8.8	9.2	9.6	10	10.4	10.8	11.2	11.6

*Products with color ▭ are available stock and short lead time.

BR: Right Side

Unit (mm)

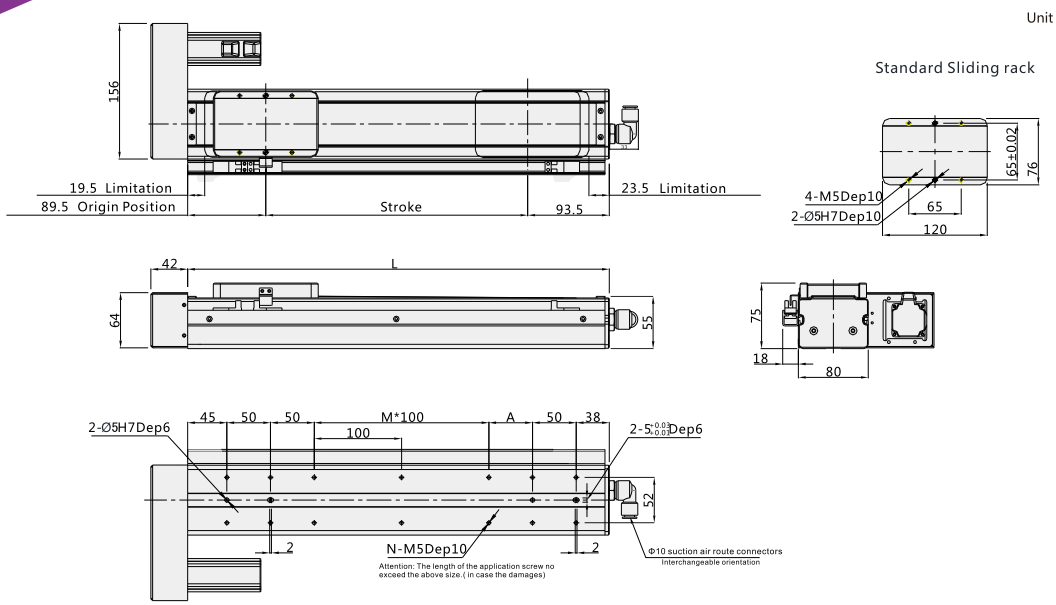

Note: Not including motor weight. *In case special stroke please contact technical services.

Working Stroke	100	150	200	250	300	350	400	450	500	550	600	650	700	750	800	850	900	950	1000	1050
L	283	333	383	433	483	533	583	633	683	733	783	833	883	933	983	1033	1083	1133	1183	1233
M	0	0	1	1	2	2	3	3	4	4	5	5	6	6	7	7	8	8	9	9
N	10	10	12	12	14	14	16	16	18	18	20	20	22	22	24	24	26	26	28	28
A	50	100	50	100	50	100	50	100	50	100	50	100	50	100	50	100	50	100	50	100
Weight KG	4	4.4	4.8	5.2	5.6	6	6.4	6.8	7.2	7.6	8	8.4	8.8	9.2	9.6	10	10.4	10.8	11.2	11.6

*Products with color ▭ are available stock and short lead time.

VC10

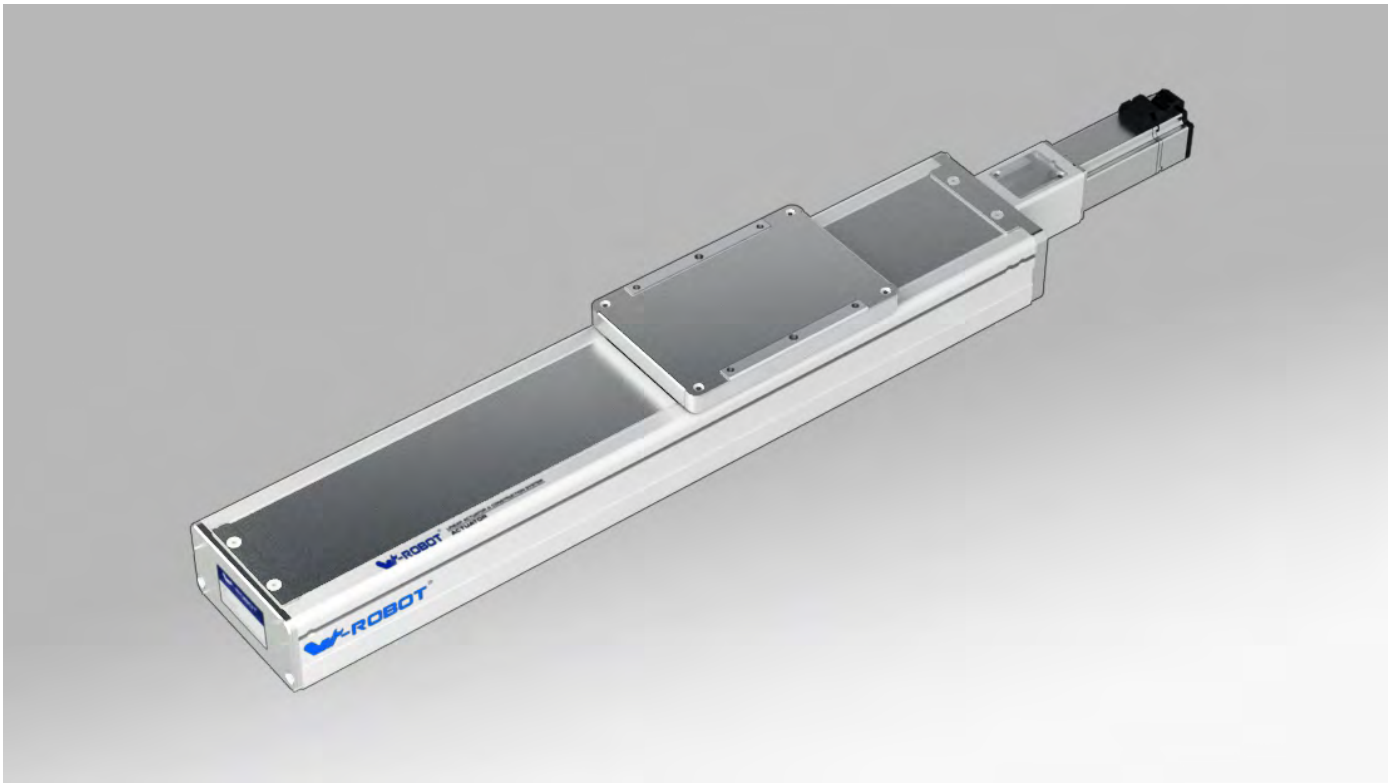

Motor direction

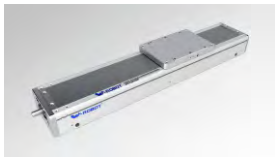

BA

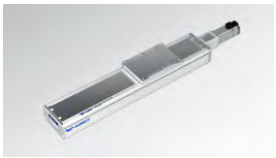

BC

BL

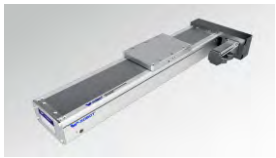

BR

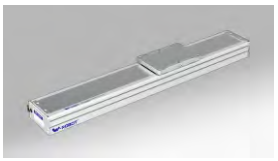

M

Guide for Model Selection

VC10 — L16 — P — S100 — BC — ZP10B — C3 — ____

Base Style	
V	Vseries
C	Cleanse Fully-enclosed
10	Body width100

Ball Screw Lead	
L5	5mm
L10	10mm
L16	16mm
L20	20mm

Accuracy class	
P	High precision
C	Common precision

Stroke(mm)
100-1000

Motor way	
BA	Basis
BC	External
BR	Right Side
BL	Left Side
M	Build-In Motor

Motor Type	
P	Panasonic
M	Mitsubishi
Y	Yaskawa
T	Delta
W	W-Robot

* For Z: Motor is from clients

Motor power	
10	100W
20	200W
40	400W
57	57-Ø8
	57-Ø6.35

Brakes	
No	No brake
B	With brake

Original Sensor position		Sensor switch	
External		External	
C	Motor side	2	2pcs
D	Oppsite motor side	3	3pcs
E	No	No sensor	

Sensor type	
No	NPN
P	PNP

Non-standard, d.c.,	
No	Standard type
BL1	Detailed information please see page 032
B2	
D01	
U01	
UD01	
H01	
HU01	
HD01	
HUD01	
M01	
S01	
T	

If the linear satges require the extra sealing strip,please add the "T"at the end of the model numbers.

VC10

W-ROBOT® Linear Drives

Specification

AC (W) Motor power AC (W)		100W/200W/400W			
BallScrewØ		(C7)	16		
		(C5)	16		
Repeatability		(C7)	±0.01		
		(C5)	±0.006		
BallScrew Lead(mm)		5	10	16	20
MaximumSpeed(mm/sec) 3000 Motor Speed(rpm/mim)		250	500	800	1000
Maximum Payload(kg)	Horizontal	50/65/65	30/39/45	22/28/33	18/20/23
	Vertical	12/15/18	8/10/12	5/6/7	3/4/5
RatedThrust(N)		330/683/1388	165/341/694	100/213/433	85/174/347
Linear Guide (mm)		15x12.5 -2			
Coupling (mm) (Motor side) x (Ball Screw Side)		8x10	11x10	14x10	14x10
Motor Output		100W	200W		400W
Home Sensor		Outside	EE-SX672(NPN) EE-SX672P(PNP)		
		Outside Guide	EE-SX674(NPN) EE-SX674P(PNP)		

Wiring drawing of inductor(original point and endpoint)

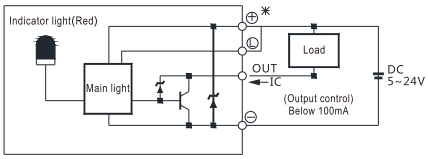

(Figure 1)

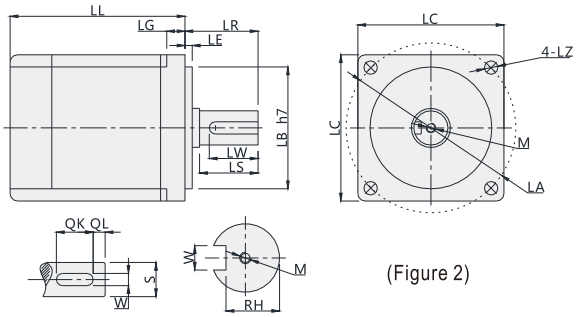

(Figure 2)

* Above repeatability is within strok 300mm,if logner travel needed,it willbe lower.In case stroke over 600 will lead to swing of ball screw,please slow down the speed 15%.Please note figure 2 motor size is same with table 1, or needed to replace coupler and motor holder.)

Servo Motor Matches List

(Table 1)

Servo motor size																			
Power(W)	Brand	Type		LL	LL(Brakes)	LA	LE	LZ	LC	LG	LW	RH	W	LR	S	LB	M	QK	QL
100W	Panasonic	MSMD012G1□	V:With brake U:No brake	92	122	45	3	3.4	38	6	14	6.2	3h9	25	8h6	30h7	M3x6L	-	-
	Delta	ECMA-C20401□S	S:With brake R:No brake	100.6	136.6	46	2.5	4.5	40	5	16	6.2	3	25	8h6	30h7	M3x8L	-	-
	Mitsubishi	HC-KFS12□K	B:With brake □:No brake	86.5	124.5	46	2.5	4.5	42	5	-	-	-	25	8h6	30h7	-	-	-
200W	Panasonic	MSMJ022G1□	V:With brake U:No brake	79.5	115.5	70	3	4.5	60	6.5	20	8.5	4h9	30	11h6	50h7	M4x8L	-	-
	Delta	ECMA-C20602□S	S:With brake R:No brake	105.5	141.5	70	3	5.5	60	7.5	20	11	5	30	14h6	50h7	M4x15L	-	-
	Mitsubishi	HC-KFS23□K	B:With brake □:No brake	99.5	131.5	70	3	5.8	62	7	-	-	-	30	14h6	50h7	-	-	-
400W	Panasonic	MSMJ042G1□	V:With brake U:No brake	99	135	70	3	4.5	60	6.5	20	11	5h9	30	14h6	50h7	M5x10L	-	-
	Delta	ECMA-C20604□S	S:With brake R:No brake	130.7	166.6	70	3	5.5	60	7.5	20	11	5	30	14h6	50h7	M4x15L	-	-
		ECMA-C20804□S	S:With brake R:No brake	112.3	152.8	90	3	6.6	80	8	20	11	5	35	14h6	70h7	M4x15L	-	-
	Mitsubishi	HC-KFS43□K	B:With brake □:No brake	124.5	165.5	70	3	5.8	62	7	-	-	-	30	14h6	50h7	-	-	-

□ Stand for empty

Max. Payload Diameters Table

(Unit : mm)

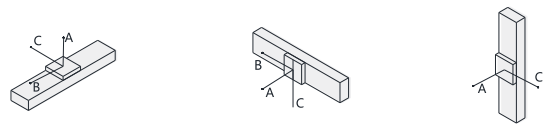

Horizontal installation		A	B	C
Lead 5	30kg	424	24	25
	50kg	0	0	0
	-	-	-	-
Lead 10	15kg	394	76	79
	25kg	184	22	25
	30kg	111	-	-
Lead 16	5kg	937	282	259
	10kg	487	121	116
	15kg	236	40	44

Wall installation		A	B	C
Lead 5	10kg	105	50	1400
	20kg	22	0	538
	30kg	0	0	0
Lead 10	10kg	100	50	545
	20kg	20	0	221
	30kg	0	0	0
Lead 16	5kg	116	58	605
	10kg	24	0	253
	15kg	0	0	0

Vertical installation		A	C
Lead 5	5kg	100	145
	10kg	50	90
	12kg	23	63
Lead 10	4kg	335	375
	6kg	140	180
	8kg	100	140
Lead 16	1kg	372	418
	2kg	166	202
	3kg	113	159

Max. Static Torque Table

(Unit : N.m)

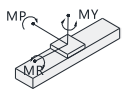

Maximum static torque	
MY	131
MP	131
MR	115

BA: Basis

Unit (mm)

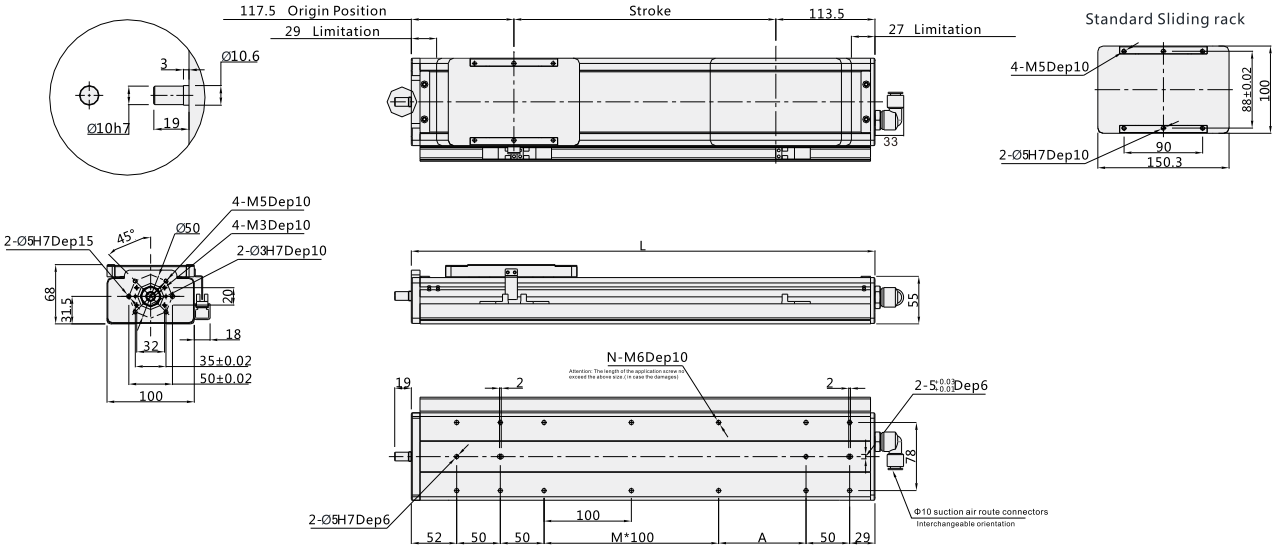

Note: Not including motor weight. *In case special stroke please contact technical services.

Working Stroke	100	150	200	250	300	350	400	450	500	550	600	650	700	750	800	850	900	950	1000	1050
L	331	381	431	481	531	581	631	681	731	781	831	881	931	981	1031	1081	1131	1181	1231	1281
M	0	1	1	2	2	3	3	4	4	5	5	6	6	7	7	8	8	9	9	10
N	10	12	12	14	14	16	16	18	18	20	20	22	22	24	24	26	26	28	28	30
A	100	50	100	50	100	50	100	50	100	50	100	50	100	50	100	50	100	50	100	50
Weight KG	4.1	4.5	4.9	5.3	5.7	6.1	6.5	6.9	7.3	7.7	8.1	8.5	8.9	9.3	9.7	10.1	10.5	10.9	11.3	11.7

*Products with color ▭ are available stock and short lead time.

BC: External

Unit (mm)

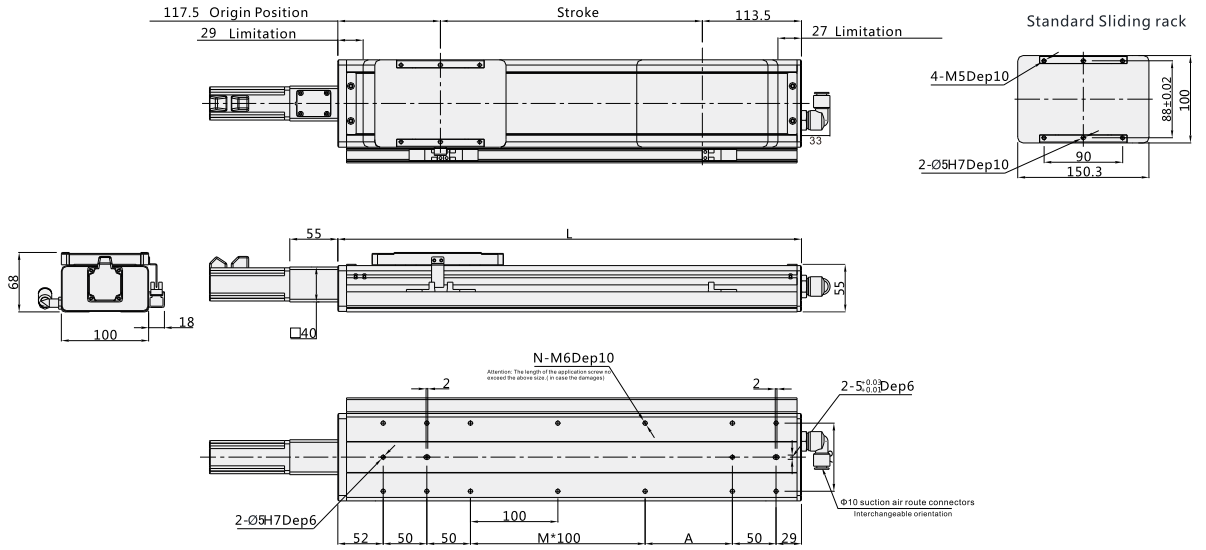

Note: Not including motor weight. *In case special stroke please contact technical services.

Working Stroke	100	150	200	250	300	350	400	450	500	550	600	650	700	750	800	850	900	950	1000	1050
L	331	381	431	481	531	581	631	681	731	781	831	881	931	981	1031	1081	1131	1181	1231	1281
M	0	1	1	2	2	3	3	4	4	5	5	6	6	7	7	8	8	9	9	10
N	10	12	12	14	14	16	16	18	18	20	20	22	22	24	24	26	26	28	28	30
A	100	50	100	50	100	50	100	50	100	50	100	50	100	50	100	50	100	50	100	50
Weight KG	4.4	4.8	5.2	5.6	6	6.4	6.8	7.2	7.6	8	8.4	8.8	9.2	9.6	10	10.4	10.8	11.2	11.6	12

*Products with color ▭ are available stock and short lead time.

BL: Left Side

Unit (mm)

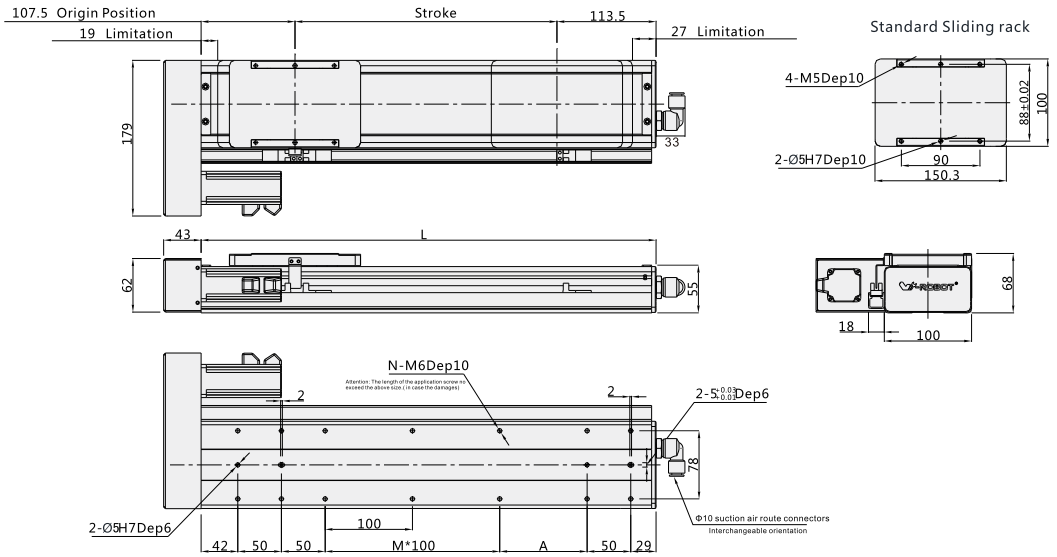

Note: Not including motor weight. *In case special stroke please contact technical services.

Working Stroke	100	150	200	250	300	350	400	450	500	550	600	650	700	750	800	850	900	950	1000	1050
L	321	371	421	471	521	571	621	671	721	771	821	871	921	971	1021	1071	1121	1171	1221	1271
M	0	1	1	2	2	3	3	4	4	5	5	6	6	7	7	8	8	9	9	10
N	10	12	12	14	14	16	16	18	18	20	20	22	22	24	24	26	26	28	28	30
A	100	50	100	50	100	50	100	50	100	50	100	50	100	50	100	50	100	50	100	50
Weight KG	5	5.4	5.8	6.2	6.6	7	7.4	7.8	8.2	8.6	9	9.4	9.8	10.2	10.6	11	11.4	11.8	12.2	12.6

*Products with color ▭ are available stock and short lead time.

BR: Right Side

Unit (mm)

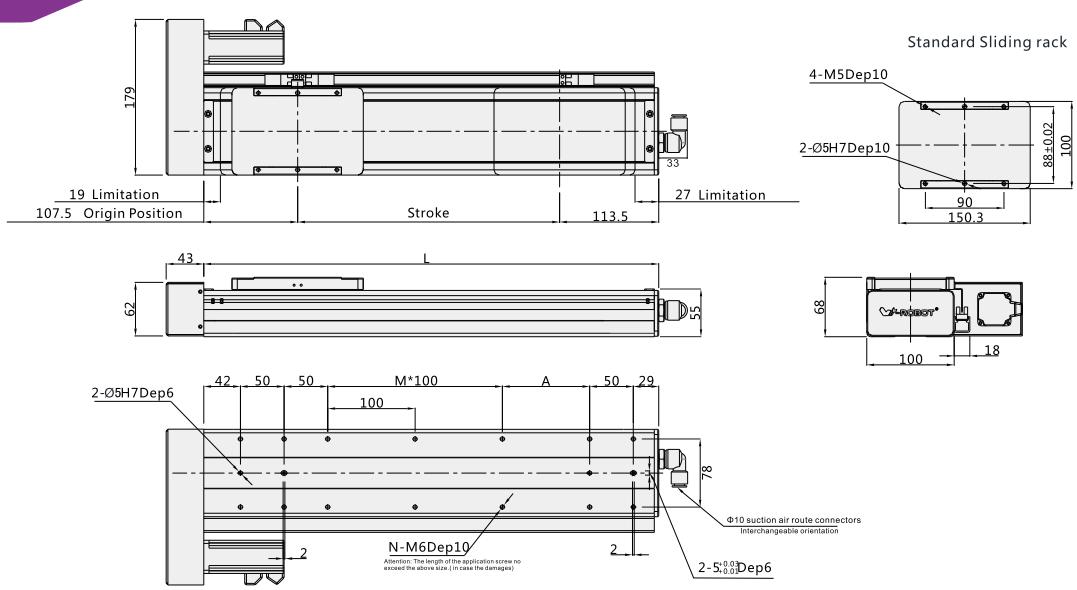

Note: Not including motor weight. *In case special stroke please contact technical services.

Working Stroke	100	150	200	250	300	350	400	450	500	550	600	650	700	750	800	850	900	950	1000	1050
L	321	371	421	471	521	571	621	671	721	771	821	871	921	971	1021	1071	1121	1171	1221	1271
M	0	1	1	2	2	3	3	4	4	5	5	6	6	7	7	8	8	9	9	10
N	10	12	12	14	14	16	16	18	18	20	20	22	22	24	24	26	26	28	28	30
A	100	50	100	50	100	50	100	50	100	50	100	50	100	50	100	50	100	50	100	50
Weight KG	5	5.4	5.8	6.2	6.6	7	7.4	7.8	8.2	8.6	9	9.4	9.8	10.2	10.6	11	11.4	11.8	12.2	12.6

*Products with color ▭ are available stock and short lead time.

M: Buil-in

Unit (mm)

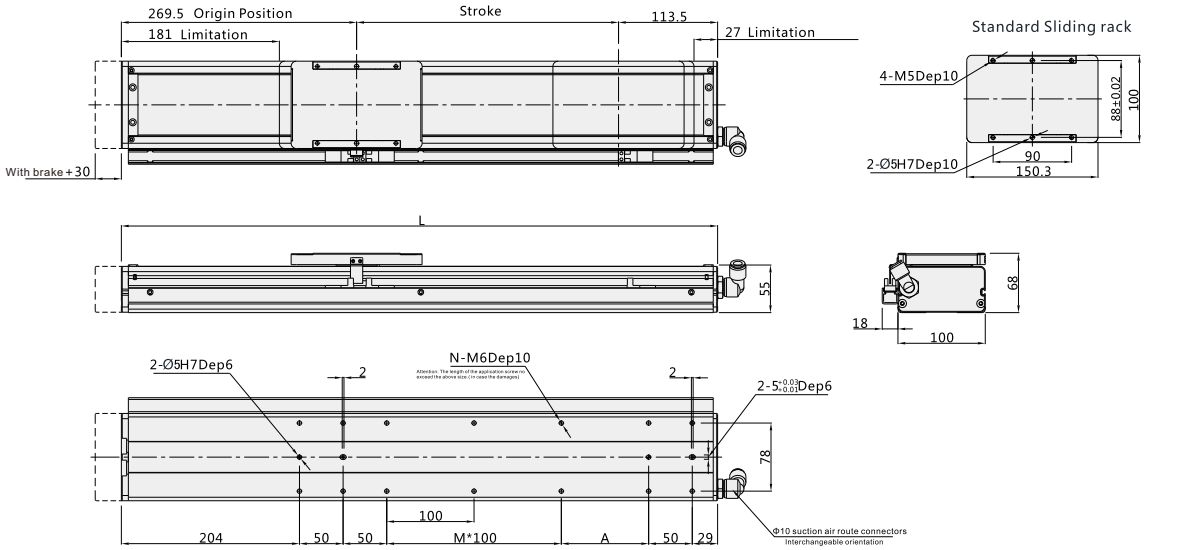

Note: Not including motor weight. *In case special stroke please contact technical services.

Working Stroke	100	150	200	250	300	350	400	450	500	550	600	650	700	750	800	850	900	950	1000
L	483	533	583	633	683	733	783	833	883	933	983	1033	1083	1133	1183	1233	1283	1333	1383
M	0	1	1	2	2	3	3	4	4	5	5	6	6	7	7	8	8	9	9
N	10	12	12	14	14	16	16	18	18	20	20	22	22	24	24	26	26	28	28
A	100	50	100	50	100	50	100	50	100	50	100	50	100	50	100	50	100	50	100
Weight KG	4.9	5.3	5.7	6.1	6.5	6.9	7.3	7.7	8.1	8.5	8.9	9.3	9.7	10.1	10.5	10.9	11.3	11.7	12.1

*Products with color are available stock and short lead time.

VC12

W-ROBOT® Linear Drives

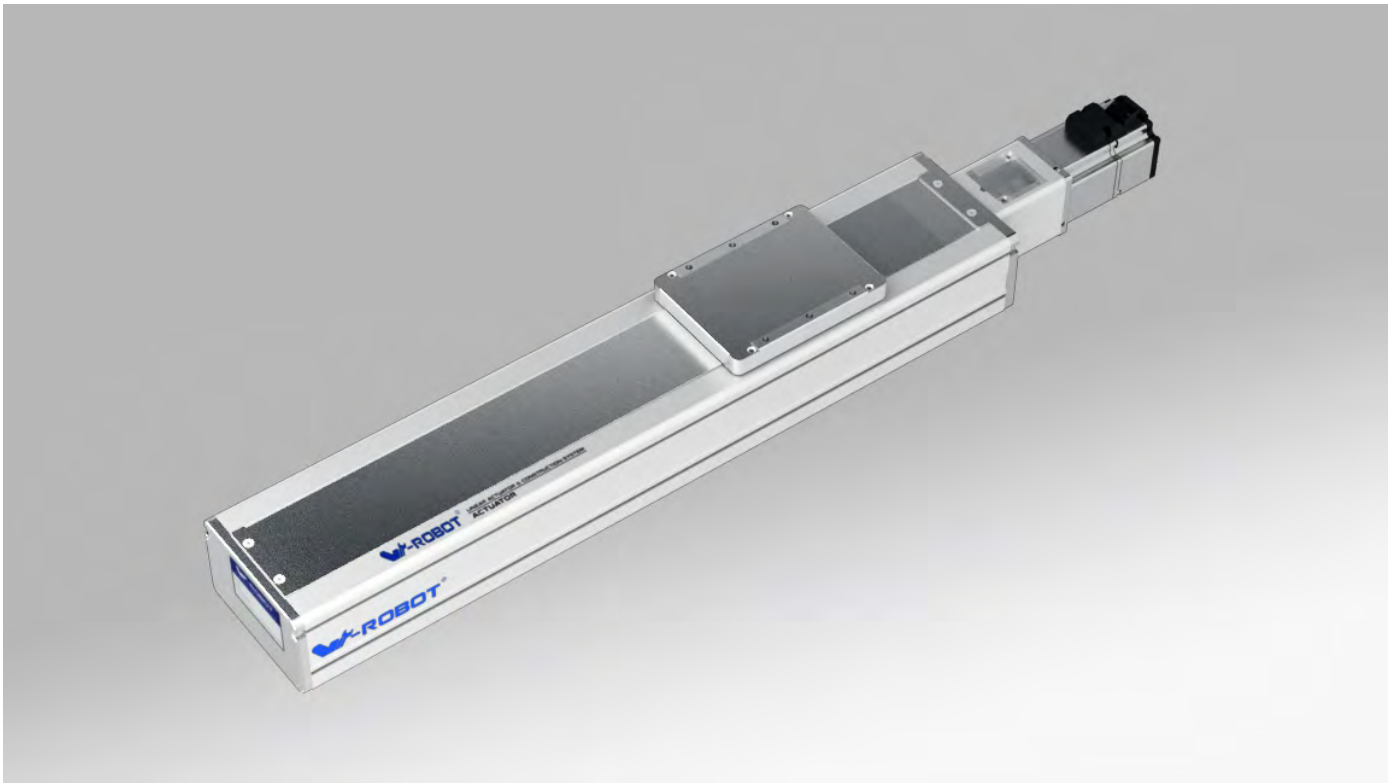

Motor direction

BA

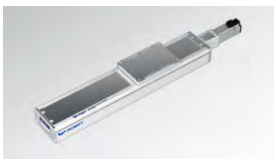

BC

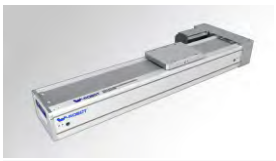

BL

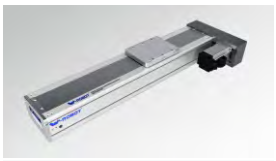

BR

M

Guide for Model Selection

VC12 – L16 – P – S100 – BC – ZP20B – C3 – ___

Base Style	
V	Vseries
C	Cleanse Fully-enclosed
12	Body width120

Ball Screw Lead	
L5	5mm
L10	10mm
L16	16mm
L20	20mm

Accuracy class	
P	High precision
C	Common precision

Stroke(mm)
100-1200

Motor way	
BA	Basis
BC	External
BR	Right Side
BL	Left Side
M	Build-In Motor

Motor Type	
P	Panasonic
M	Mitsubishi
Y	Yaskawa
T	Delta
W	W-Robot
* For Z: Motor is from clients	

Motor power	
20	200W
40	400W
57	57-Ø8
57	57-Ø6.35

Brakes	
No	No brake
B	With brake

Original Sensor position	
External	
C	Motor side
D	Oppsite motor side
E	No

Sensor switch	
External	
2	2pcs
3	3pcs
No sensor	

Sensor type	
No	NPN
P	PNP

Non-standard, d.c.,	
No	Standard type
BL1	Detailed information please see page 032
B2	
D01	
U01	
UD01	
H01	
HU01	
HD01	
HUD01	
M01	
S01	
T	

If the linear satges require the extra sealing strip,please add the "T"at the end of the model numbers.

Specification

Motor power AC (W)		200W/400W			
BallScrewØ(mm)		(C7)	16		
		(C5)	16		
Repeatability(mm)		(C7)	±0.01		
		(C5)	±0.006		
BallScrew Lead(mm)		5	10	16	20
MaximumSpeed(mm/sec) 3000 Motor Speed(rpm/mim)		250	500	800	1000
Maximum Payload(kg)	Horizontal	70/84	47/56	30/36	24/28
	Vertical	17/20	12/17	6/7	4/5
RatedThrust(N)		683/1388	341/694	213/433	174/347
Linear Guide (mm)		15x12.5 -2			
Coupling (mm) (Motor side) x (Ball Screw Side)		11x10	14x10	14x10	
Motor Output		200W		400W	
Home Sensor		Outside EE-SX672(NPN) EE-SX672P(PNP)			
		Outside Guide EE-SX674(NPN) EE-SX674P(PNP)			

Wiring drawing of inductor(original point and endpoint)

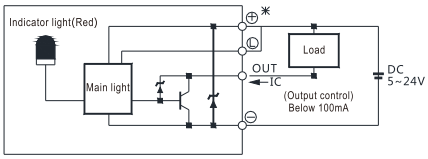

(Figure 1)

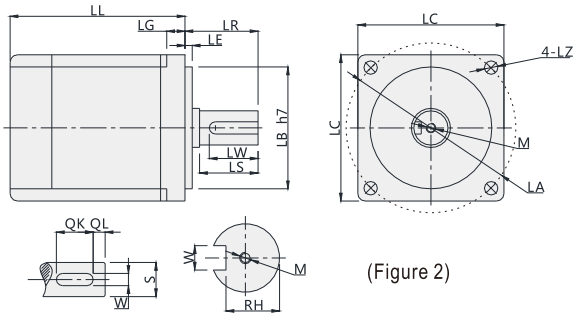

(Figure 2)

* Above repeatability is within strok 300mm,if logner travel needed,it willbe lower.In case stroke over 600 will lead to swing of ball screw,please slow down the speed 15%.Please note figure 2 motor size is same with table 1, or needed to replace coupler and motor holder.)

Servo Motor Matches List

(Table 1)

Servo motor size																			
Power(W)	Brand	Type		LL	LL(Brakes)	LA	LE	LZ	LC	LG	LW	RH	W	LR	S	LB	M	QK	QL
200W	Panasonic	MSMJ022G1□	V:With brake U:No brake	79.5	115.5	70	3	4.5	60	6.5	20	8.5	4h9	30	11h6	50h7	M4x8L	-	-
	Delta	ECMA-C20602□S	S:With brake R:No brake	105.5	141.5	70	3	5.5	60	7.5	20	11	5	30	14h6	50h7	M4x15L	-	-
	Mitsubishi	HC-KFS23□K	B:With brake □:No brake	99.5	131.5	70	3	5.8	62	7	-	-	-	30	14h6	50h7	-	-	-
400W	Panasonic	MSMJ042G1□	V:With brake U:No brake	99	135	70	3	4.5	60	6.5	20	11	5h9	30	14h6	50h7	M5x10L	-	-
	Delta	ECMA-C20604□S	S:With brake R:No brake	130.7	166.6	70	3	5.5	60	7.5	20	11	5	30	14h6	50h7	M4x15L	-	-
		ECMA-C20804□S	S:With brake R:No brake	112.3	152.8	90	3	6.6	80	8	20	11	5	35	14h6	70h7	M4x15L	-	-
	Mitsubishi	HC-KFS43□K	B:With brake □:No brake	124.5	165.5	70	3	5.8	62	7	-	-	-	30	14h6	50h7	-	-	-
750W	Panasonic	MSMJ082G1□	V:With brake U:No brake	122	149	90	3	6	80	8	25	15.5	6h9	35	19h6	70h7	M5x10L	-	-
	Delta	ECMA-C20807□S	S:With brake R:No brake	138.3	178	90	3	6.6	80	8	25	15.5	6	35	19h6	70h7	M6x20L	-	-
		ECMA-C20907□S	S:With brake R:No brake	130.2	161.3	100	3	6.6	86	8	20	13	5	35	16h6	80h7	M5x15L	-	-
	Mitsubishi	HC-KFS73□K	B:With brake □:No brake	142	177.5	90	3	6.6	82	8	-	-	-	40	19h6	70h7	-	-	-

□ Stand for empty

Max. Payload Diameters Table

(Unit : mm)

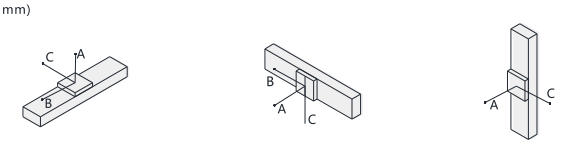

Horizontal installation		A	B	C
Lead 5	40kg	2448	316	322
	55kg	2197	247	257
	70kg	2005	207	219
Lead 10	25kg	1958	370	490
	35kg	1660	370	330
	47kg	1725	247	243
Lead 16	10kg	1800	1400	311
	20kg	1100	1100	139
	30kg	1047	445	324

Wall installation		A	B	C
Lead 5	40kg	204	112	1394
	55kg	130	57	1115
	70kg	85	24	895
Lead 10	25kg	414	333	1277
	35kg	235	157	929
	47kg	129	57	751
Lead 16	10kg	461	372	1410
	20kg	264	178	1027
	30kg	148	69	832

Vertical installation		A	C
Lead 5	5kg	762	614
	10kg	607	489
	12kg	498	493
Lead 10	4kg	1365	1101
	6kg	901	727
	8kg	674	543
Lead 16	1kg	1087	1217
	2kg	997	805
	6kg	747	603

Max. Static Torque Table

(Unit : N.m)

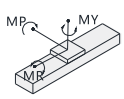

Maximum static torque	
MY	174
MP	175
MR	153

VC12

V-ROBOT® Linear Drives

BA: Basis

Unit (mm)

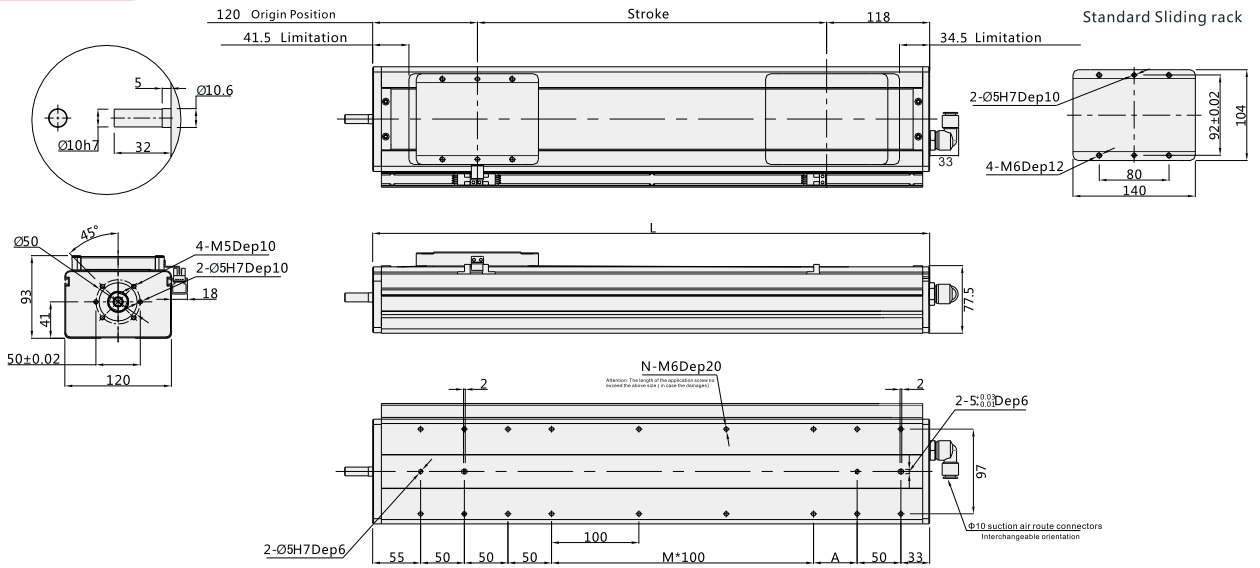

Note: Not including motor weight. *In case special stroke please contact technical services.

Working Stroke	100	150	200	250	300	350	400	450	500	550	600	650	700	750	800	850	900	950	1000	1050	1100	1150	1200
L	338	388	438	488	538	588	638	688	738	788	838	888	938	988	1038	1088	1138	1188	1238	1288	1338	1388	1438
M	0	0	1	1	2	2	3	3	4	4	5	5	6	6	7	7	8	8	9	9	10	10	11
N	12	12	14	14	16	16	18	18	20	20	22	22	24	24	26	26	28	28	30	30	32	32	34
A	50	100	50	100	50	100	50	100	50	100	50	100	50	100	50	100	50	100	50	100	50	100	50
Weight KG	5.9	6.4	6.9	7.4	7.9	8.4	8.9	9.4	9.9	10.4	10.9	11.4	11.9	12.4	12.9	13.4	13.9	14.4	14.9	15.4	15.9	16.4	16.9

*Products with color ▭ are available stock and short lead time.

BC: External

Unit (mm)

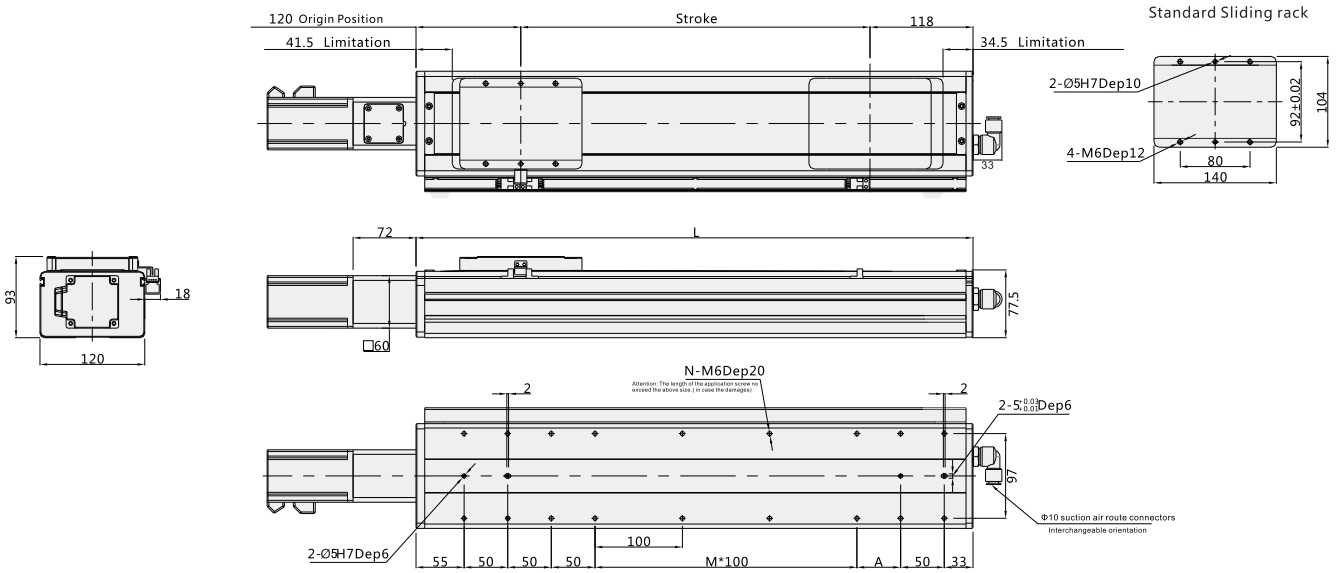

Note: Not including motor weight. *In case special stroke please contact technical services.

Working Stroke	100	150	200	250	300	350	400	450	500	550	600	650	700	750	800	850	900	950	1000	1050	1100	1150	1200
L	338	388	438	488	538	588	638	688	738	788	838	888	938	988	1038	1088	1138	1188	1238	1288	1338	1388	1438
M	0	0	1	1	2	2	3	3	4	4	5	5	6	6	7	7	8	8	9	9	10	10	11
N	12	12	14	14	16	16	18	18	20	20	22	22	24	24	26	26	28	28	30	30	32	32	34
A	50	100	50	100	50	100	50	100	50	100	50	100	50	100	50	100	50	100	50	100	50	100	50
Weight KG	6.2	6.7	7.2	7.7	8.2	8.7	9.2	9.7	10.2	10.7	11.2	11.7	12.2	12.7	13.2	13.7	14.2	14.7	15.2	15.7	16.2	16.7	17.2

*Products with color ▭ are available stock and short lead time.

BL: Left Side

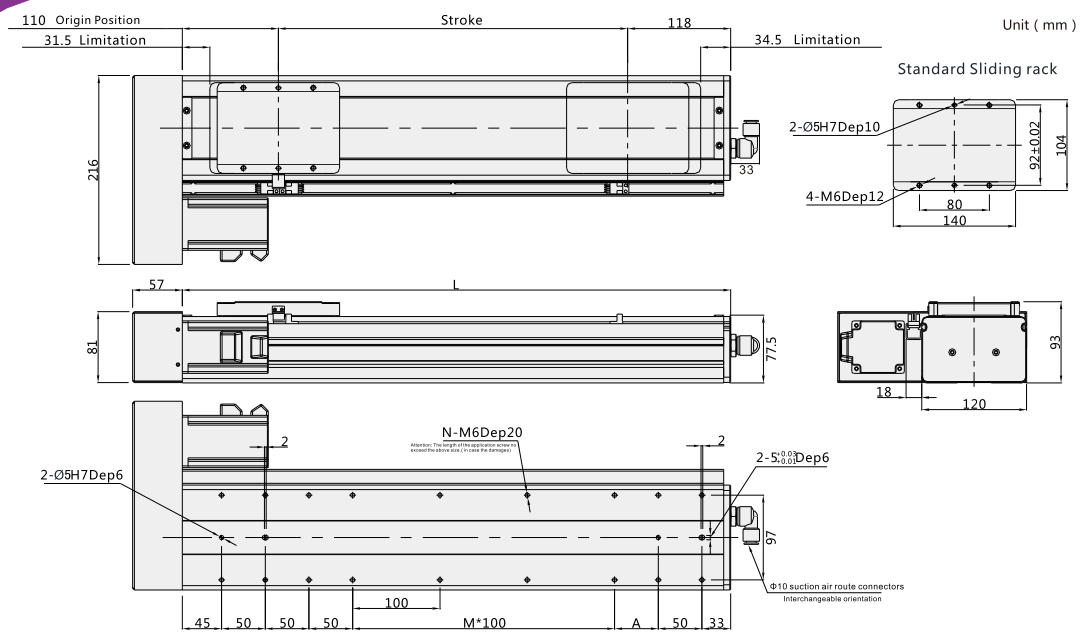

Note: Not including motor weight. *In case special stroke please contact technical services.

Working Stroke	100	150	200	250	300	350	400	450	500	550	600	650	700	750	800	850	900	950	1000	1050	1100	1150	1200
L	328	378	428	478	528	578	628	678	728	778	828	878	928	978	1028	1078	1128	1178	1228	1278	1328	1378	1428
M	0	0	1	1	2	2	3	3	4	4	5	5	6	6	7	7	8	8	9	9	10	10	11
N	12	12	14	14	16	16	18	18	20	20	22	22	24	24	26	26	28	28	30	30	32	32	34
A	50	100	50	100	50	100	50	100	50	100	50	100	50	100	50	100	50	100	50	100	50	100	50
Weight KG	7.3	7.8	8.3	8.8	9.3	9.8	10.3	10.8	11.3	11.8	12.3	12.8	13.3	13.8	14.3	14.8	15.3	15.8	16.3	16.8	17.3	17.8	18.3

*Products with color ▭ are available stock and short lead time.

BR: Right Side

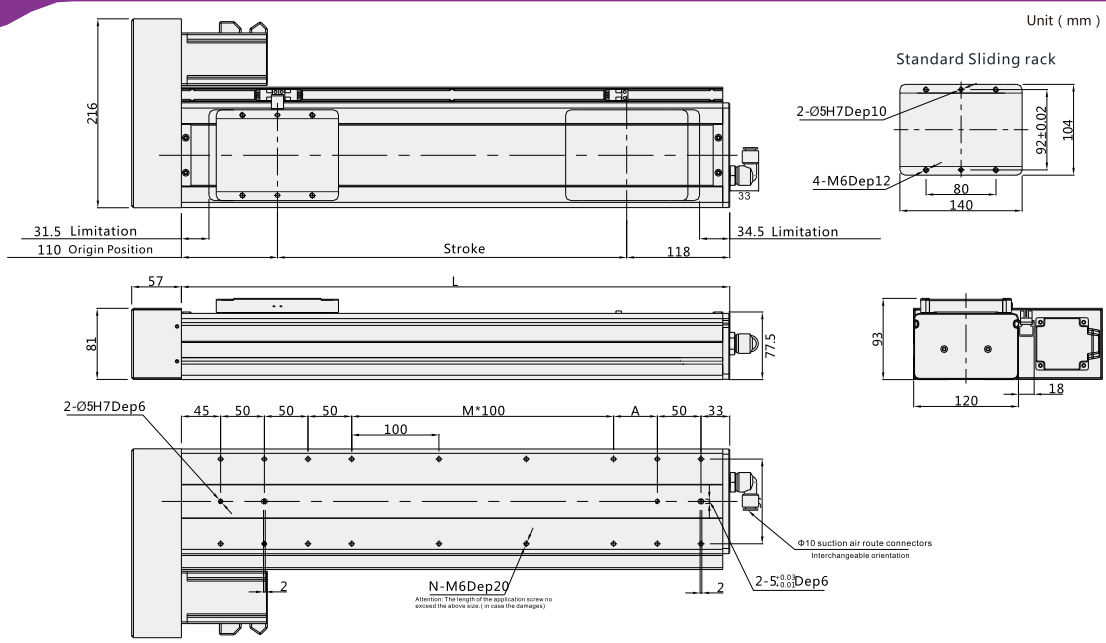

Note: Not including motor weight. *In case special stroke please contact technical services.

Working Stroke	100	150	200	250	300	350	400	450	500	550	600	650	700	750	800	850	900	950	1000	1050	1100	1150	1200
L	328	378	428	478	528	578	628	678	728	778	828	878	928	978	1028	1078	1128	1178	1228	1278	1328	1378	1428
M	0	0	1	1	2	2	3	3	4	4	5	5	6	6	7	7	8	8	9	9	10	10	11
N	12	12	14	14	16	16	18	18	20	20	22	22	24	24	26	26	28	28	30	30	32	32	34
A	50	100	50	100	50	100	50	100	50	100	50	100	50	100	50	100	50	100	50	100	50	100	50
Weight KG	7.3	7.8	8.3	8.8	9.3	9.8	10.3	10.8	11.3	11.8	12.3	12.8	13.3	13.8	14.3	14.8	15.3	15.8	16.3	16.8	17.3	17.8	18.3

*Products with color ▭ are available stock and short lead time.

M: Buil-in

Unit (mm)

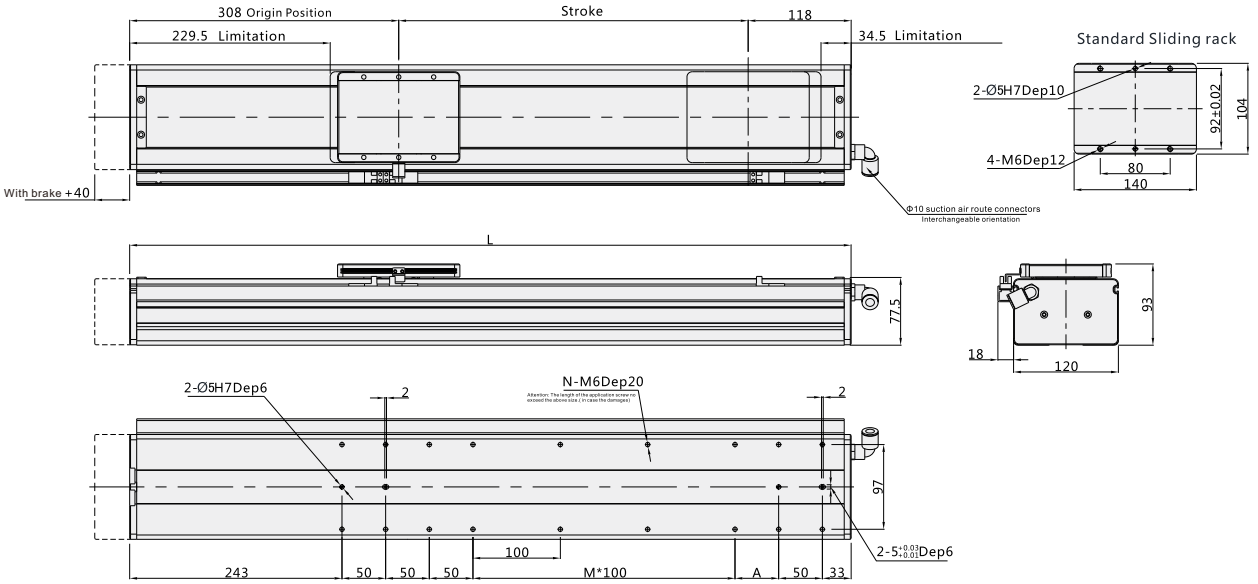

Note: Not including motor weight. *In case special stroke please contact technical services.

Working Stroke	100	150	200	250	300	350	400	450	500	550	600	650	700	750	800	850	900	950	1000	1050	1100	1150	1200
L	526	576	626	676	726	776	826	876	926	976	1026	1076	1126	1176	1226	1276	1326	1376	1426	1476	1526	1576	1626
M	0	0	1	1	2	2	3	3	4	4	5	5	6	6	7	7	8	8	9	9	10	10	11
N	12	12	14	14	16	16	18	18	20	20	22	22	24	24	26	26	28	28	30	30	32	32	34
A	50	100	50	100	50	100	50	100	50	100	50	100	50	100	50	100	50	100	50	100	50	100	50
Weight KG	6.9	7.4	7.9	8.4	8.9	9.4	9.9	10.4	10.9	11.4	11.9	12.4	12.9	13.4	13.9	14.4	14.9	15.4	15.9	16.4	16.9	17.4	17.9

*Products with color ▭ are available stock and short lead time.

VC14

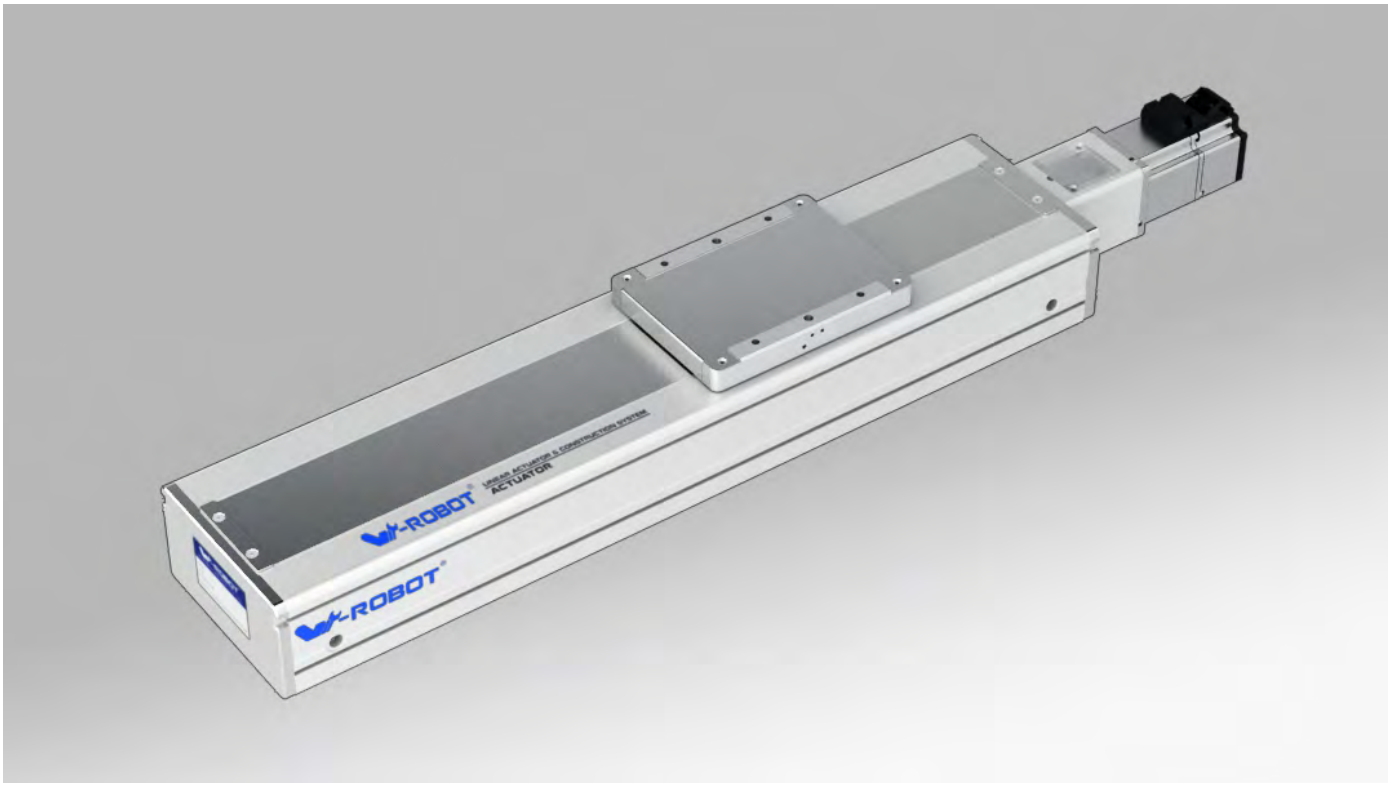

Motor direction

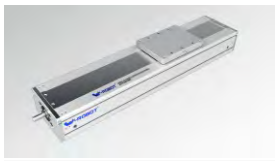

BA

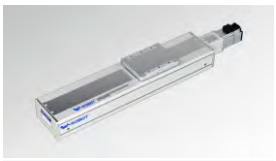

BC

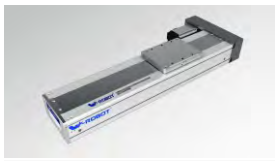

BL

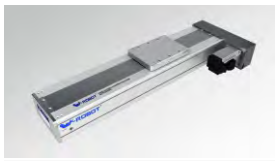

BR

M

Guide for Model Selection

VC14 – L20 – P – S100 – BC – ZP40B – C3 – ___

Base Style	
V	Vseries
C	Cleanse Fully-enclosed
14	Body width140

Ball Screw Lead	
L5	5mm
L10	10mm
L20	20mm
L40	40mm

Accuracy class	
P	High precision
C	Common precision

Stroke(mm)
100-1500

Motor way	
BA	Basis
BC	External
BR	Right Side
BL	Left Side
M	Build-In Motor

Motor Type	
P	Panasonic
M	Mitsubishi
Y	Yaskawa
T	Delta
W	W-Robot

* For Z: Motor is from clients

Motor power	
40	400W
75	750W
Brakes	
No	No brake
B	With brake

Original Sensor position	
External	
C	Motor side
D	Oppsite motor side
E	No

Sensor switch	
External	
2	2pcs
3	3pcs
No sensor	

Sensor type	
No	NPN
P	PNP

Non-standard, d.c.,	
No	Standard type
BL1	Detailed information please see page032
B2	
D01	
U01	
UD01	
H01	
HU01	
HD01	
HUD01	
M01	
S01	
T	

If the linear satges require the extra sealing strip,please add the "T"at the end of the model numbers.

VC14

W-ROBOT® Linear Drives

Specification

Motor power AC (W)		400W/750W			
BallScrew ∅(mm)		(C7)	20		
		(C5)	20		
Repeatability (mm)		(C7)	±0.01		
		(C5)	±0.006		
BallScrew Lead(mm)		5	10	20	40
MaximumSpeed(mm/sec) 3000 Motor Speed(rpm/mim)		250	500	1000	2000
Maximum Payload(kg)	Horizontal	110/115	100/105	70/80	30/50
	Vertical	40/45	29/35	14/20	5/10
RatedThrust(N)		1388/2565	694/1281	347/640	170/320
Linear Guide (mm)		20x15.5 -2			
Coupling (mm) (Motor side) x (Ball Screw Side)		14x12	19x12		
Motor Output		400W	750W		
Home Sensor		Outside	EE-SX672(NPN) EE-SX672P(PNP)		
		Outside Guide	EE-SX674(NPN) EE-SX674P(PNP)		

Wiring drawing of inductor(original point and endpoint)

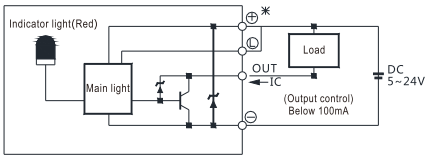

(Figure 1)

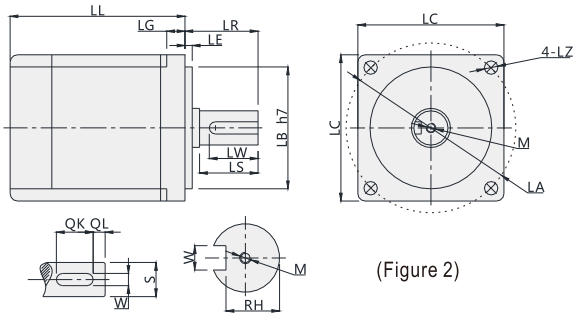

(Figure 2)

* Above repeatability is within strok 300mm,if logner travel needed,it willbe lower.In case stroke over 600 will lead to swing of ball screw,please slow down the speed 15%.Please note figure 2 motor size is same with table 1, or needed to replace coupler and motor holder.)

Servo Motor Matches List

(Table 1)

Servo motor size																			
Power(W)	Brand	Type		LL	LL(Brakes)	LA	LE	LZ	LC	LG	LW	RH	W	LR	S	LB	M	QK	QL
200W	Panasonic	MSMJ022G1□	V:With brake U:No brake	79.5	115.5	70	3	4.5	60	6.5	20	8.5	4h9	30	11h6	50h7	M4x8L	-	-
	Delta	ECMA-C20602□S	S:With brake R:No brake	105.5	141.5	70	3	5.5	60	7.5	20	11	5	30	14h6	50h7	M4x15L	-	-
	Mitsubishi	HC-KFS23□K	B:With brake □:No brake	99.5	131.5	70	3	5.8	62	7	-	-	-	30	14h6	50h7	-	-	-
400W	Panasonic	MSMJ042G1□	V:With brake U:No brake	99	135	70	3	4.5	60	6.5	20	11	5h9	30	14h6	50h7	M5x10L	-	-
	Delta	ECMA-C20604□S	S:With brake R:No brake	130.7	166.6	70	3	5.5	60	7.5	20	11	5	30	14h6	50h7	M4x15L	-	-
		ECMA-C20804□S	S:With brake R:No brake	112.3	152.8	90	3	6.6	80	8	20	11	5	35	14h6	70h7	M4x15L	-	-
	Mitsubishi	HC-KFS43□K	B:With brake □:No brake	124.5	165.5	70	3	5.8	62	7	-	-	-	30	14h6	50h7	-	-	-
750W	Panasonic	MSMJ082G1□	V:With brake U:No brake	122	149	90	3	6	80	8	25	15.5	6h9	35	19h6	70h7	M5x10L	-	-
	Delta	ECMA-C20807□S	S:With brake R:No brake	138.3	178	90	3	6.6	80	8	25	15.5	6	35	19h6	70h7	M6x20L	-	-
		ECMA-C20907□S	S:With brake R:No brake	130.2	161.3	100	3	6.6	86	8	20	13	5	35	16h6	80h7	M5x15L	-	-
	Mitsubishi	HC-KFS73□K	B:With brake □:No brake	142	177.5	90	3	6.6	82	8	-	-	-	40	19h6	70h7	-	-	-

□ Stand for empty

Max. Payload Diameters Table

(Unit : mm)

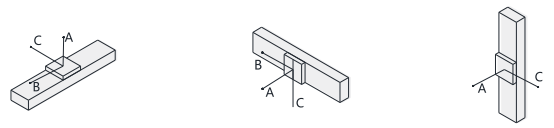

Horizontal installation		A	B	C
Lead 5	55kg	2235	327	433
	95kg	1500	156	249
	115kg	1385	152	202
Lead 10	55kg	1830	321	428
	70kg	1508	190	252
	90kg	1389	156	206
Lead 20	25kg	1989	675	746
	45kg	1332	395	445
	78kg	1047	238	201

Wall installation		A	B	C
Lead 5	55kg	378	263	1829
	95kg	208	124	1497
	115kg	163	89	1377
Lead 10	55kg	400	265	1831
	70kg	220	135	1508
	90kg	173	100	1389
Lead 20	25kg	737	612	1930
	45kg	427	332	1260
	78kg	253	174	944

Vertical installation		A	C
Lead 5	15kg	1133	915
	25kg	908	743
	45kg	745	722
Lead 10	10kg	1334	1334
	20kg	788	788
	35kg	563	563
Lead 20	1kg	1265	1265
	5kg	1114	1114
	20kg	489	489

Max. Static Torque Table

(Unit : N.m)

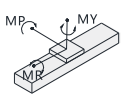

Maximum static torque	
MY	784
MP	788
MR	691

BA: Basis

Unit (mm)

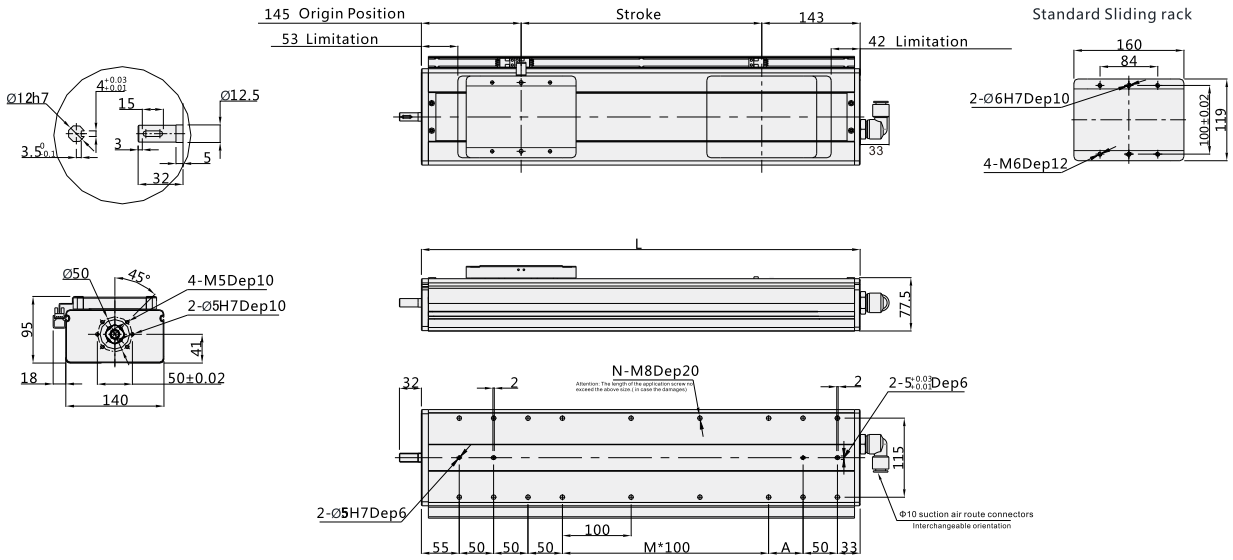

Note: Not including motor weight. *In case special stroke please contact technical services.

Working Stroke	100	150	200	250	300	350	400	450	500	550	600	650	700	750	800	850	900	950	1000	1050	1100	1150	1200	1250	1300	1350	1400	1450	1500
L	388	438	488	538	588	638	688	738	788	838	888	938	988	1038	1088	1138	1188	1238	1288	1338	1388	1438	1488	1538	1588	1638	1688	1738	1788
M	0	1	1	2	2	3	3	4	4	5	5	6	6	7	7	8	8	9	9	10	10	11	11	12	12	13	13	14	14
N	12	14	14	16	16	18	18	20	20	22	22	24	24	26	26	28	28	30	30	32	32	34	34	36	36	38	38	40	40
A	100	50	100	50	100	50	100	50	100	50	100	50	100	50	100	50	100	50	100	50	100	50	100	50	100	50	100	50	100
Weight KG	9.4	10.1	10.8	11.5	12.2	12.9	13.6	14.3	15	15.7	16.4	17.1	17.8	18.5	19.2	19.9	20.6	21.3	22	22.7	23.4	24.1	24.8	25.5	26.2	26.9	27.6	28.3	29

*Products with color ____ are available stock and short lead time.

BC: External

Unit (mm)

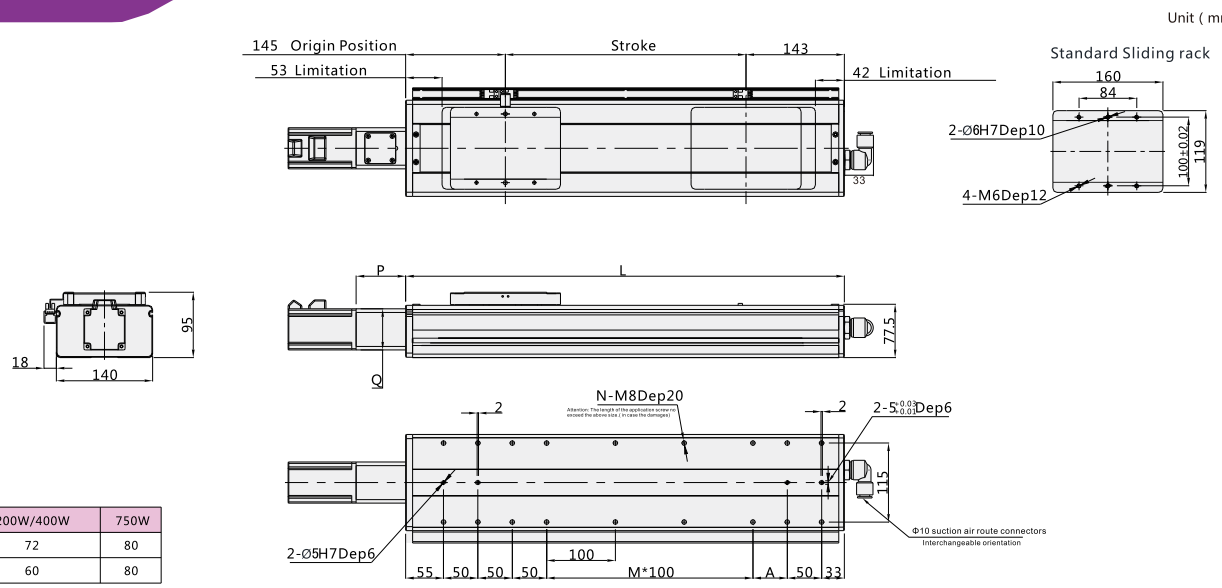

Motor specifications	200W/400W	750W
Corresponding to the P value	72	80
Corresponding to the Q value	60	80

Note: Not including motor weight. *In case special stroke please contact technical services.

Working Stroke	100	150	200	250	300	350	400	450	500	550	600	650	700	750	800	850	900	950	1000	1050	1100	1150	1200	1250	1300	1350	1400	1450	1500
L	388	438	488	538	588	638	688	738	788	838	888	938	988	1038	1088	1138	1188	1238	1288	1338	1388	1438	1488	1538	1588	1638	1688	1738	1788
M	0	1	1	2	2	3	3	4	4	5	5	6	6	7	7	8	8	9	9	10	10	11	11	12	12	13	13	14	14
N	12	14	14	16	16	18	18	20	20	22	22	24	24	26	26	28	28	30	30	32	32	34	34	36	36	38	38	40	40
A	100	50	100	50	100	50	100	50	100	50	100	50	100	50	100	50	100	50	100	50	100	50	100	50	100	50	100	50	100
Weight KG	10.1	10.8	11.5	12.2	12.9	13.6	14.3	15	15.7	16.4	17.1	17.8	18.5	19.2	19.9	20.6	21.3	22	22.7	23.4	24.1	24.8	25.5	26.2	26.9	27.6	28.3	29	29.7

*Products with color ____ are available stock and short lead time.

VC14

W-ROBOT® Linear Drives

BL: Left Side

Unit (mm)

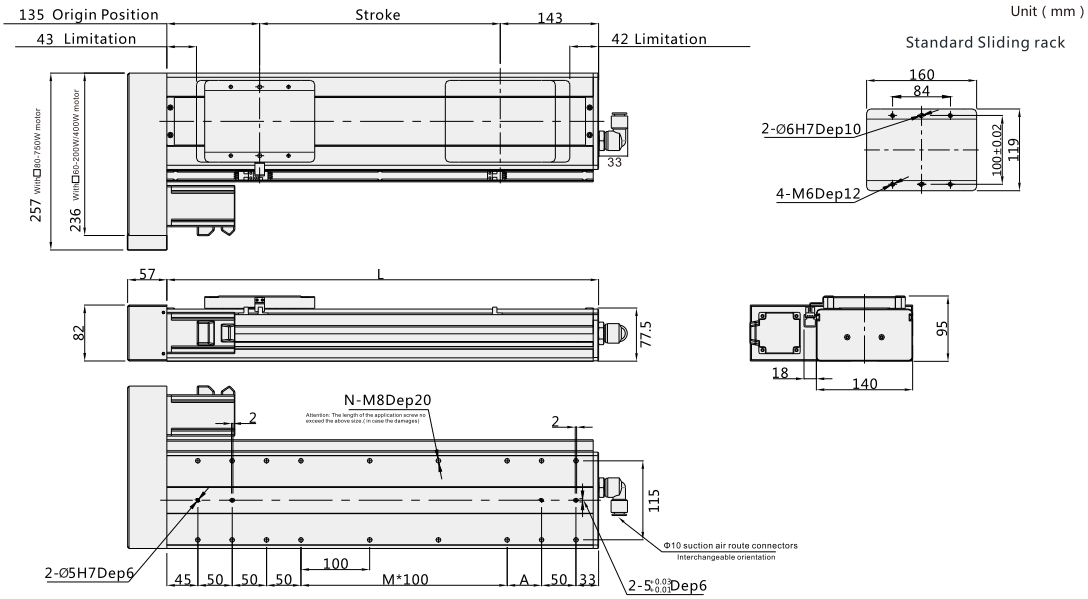

Note: Not including motor weight. *In case special stroke please contact technical services.

Working Stroke	100	150	200	250	300	350	400	450	500	550	600	650	700	750	800	850	900	950	1000	1050	1100	1150	1200	1250	1300	1350	1400	1450	1500
L	378	428	478	528	578	628	678	728	778	828	878	928	978	1028	1078	1128	1178	1228	1278	1328	1378	1428	1478	1528	1578	1628	1678	1728	1778
M	0	1	1	2	2	3	3	4	4	5	5	6	6	7	7	8	8	9	9	10	10	11	11	12	12	13	13	14	14
N	12	14	14	16	16	18	18	20	20	22	22	24	24	26	26	28	28	30	30	32	32	34	34	36	36	38	38	40	40
A	100	50	100	50	100	50	100	50	100	50	100	50	100	50	100	50	100	50	100	50	100	50	100	50	100	50	100	50	100
Weight KG	11	11.7	12.4	13.1	13.8	14.5	15.2	15.9	16.6	17.3	18	18.7	19.4	20.1	20.8	21.5	22.2	22.9	23.6	24.3	25	25.7	26.4	27.1	27.8	28.5	29.2	29.9	30.6

*Products with color ▭ are available stock and short lead time.

BR: Right Side

Unit (mm)

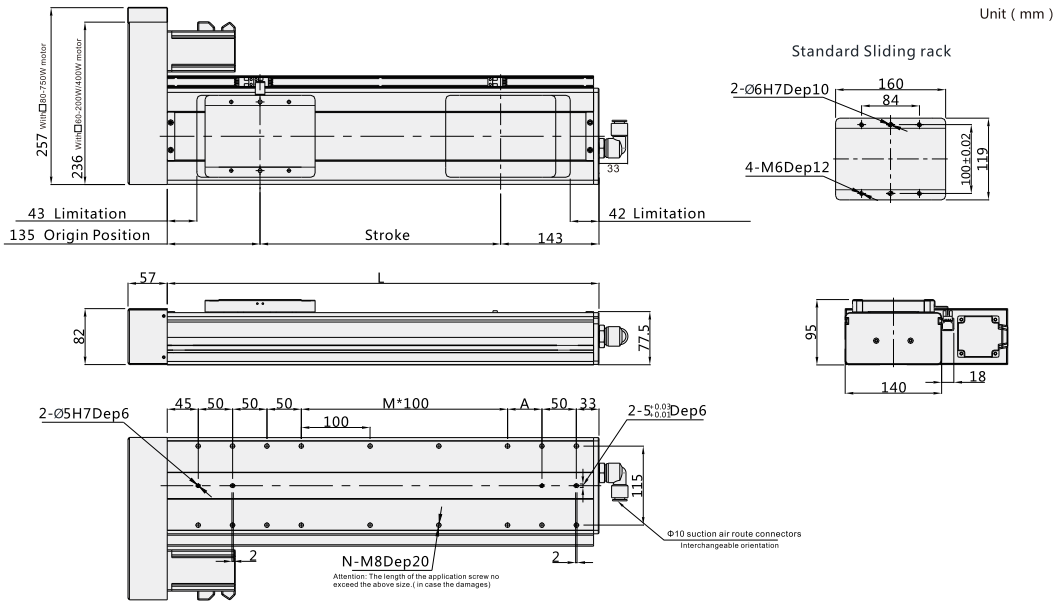

Note: Not including motor weight. *In case special stroke please contact technical services.

Working Stroke	100	150	200	250	300	350	400	450	500	550	600	650	700	750	800	850	900	950	1000	1050	1100	1150	1200	1250	1300	1350	1400	1450	1500
L	378	428	478	528	578	628	678	728	778	828	878	928	978	1028	1078	1128	1178	1228	1278	1328	1378	1428	1478	1528	1578	1628	1678	1728	1778
M	0	1	1	2	2	3	3	4	4	5	5	6	6	7	7	8	8	9	9	10	10	11	11	12	12	13	13	14	14
N	12	14	14	16	16	18	18	20	20	22	22	24	24	26	26	28	28	30	30	32	32	34	34	36	36	38	38	40	40
A	100	50	100	50	100	50	100	50	100	50	100	50	100	50	100	50	100	50	100	50	100	50	100	50	100	50	100	50	100
Weight KG	11	11.7	12.4	13.1	13.8	14.5	15.2	15.9	16.6	17.3	18	18.7	19.4	20.1	20.8	21.5	22.2	22.9	23.6	24.3	25	25.7	26.4	27.1	27.8	28.5	29.2	29.9	30.6

*Products with color ▭ are available stock and short lead tim▭

M: Buil-in

Unit (mm)

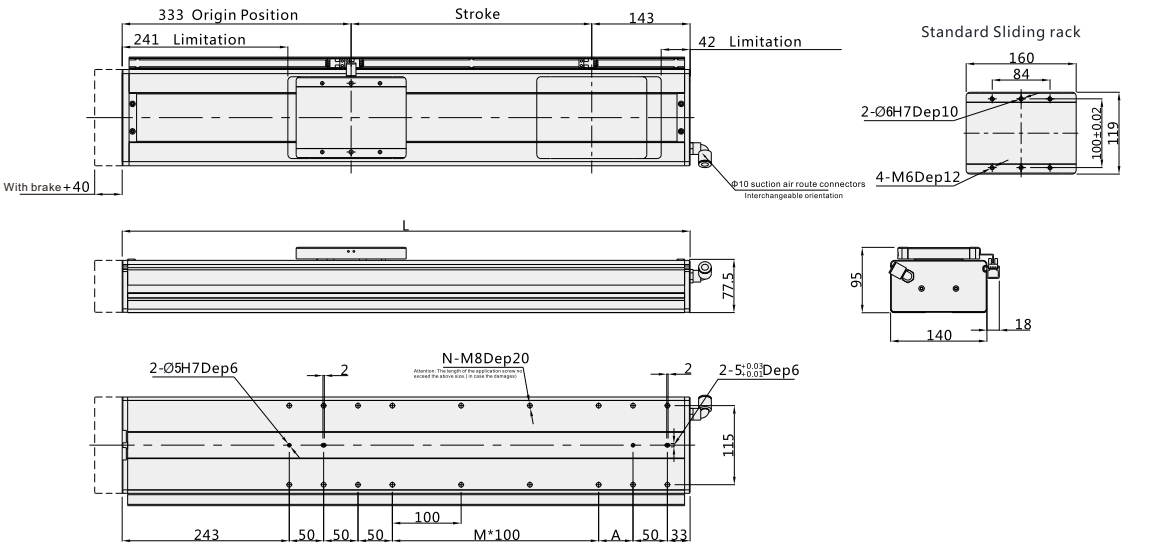

Note: Not including motor weight. *In case special stroke please contact technical services.

Working Stroke	100	150	200	250	300	350	400	450	500	550	600	650	700	750	800	850	900	950	1000	1050	1100	1150	1200	1250	1300	1350	1400	1450	1500
L	576	626	676	726	776	826	876	926	976	1026	1076	1126	1176	1226	1276	1326	1376	1426	1476	1526	1576	1626	1676	1726	1776	1826	1876	1926	1976
M	0	1	1	2	2	3	3	4	4	5	5	6	6	7	7	8	8	9	9	10	10	11	11	12	12	13	13	14	14
N	12	14	14	16	16	18	18	20	20	22	22	24	24	26	26	28	28	30	30	32	32	34	34	36	36	38	38	40	40
A	100	50	100	50	100	50	100	50	100	50	100	50	100	50	100	50	100	50	100	50	100	50	100	50	100	50	100	50	100
Weight KG	10.8	11.5	12.2	12.9	13.6	14.3	15	15.7	16.4	17.1	17.8	18.5	19.2	19.9	20.6	21.3	22	22.7	23.4	24.1	24.8	25.5	26.2	26.9	27.6	28.3	29	29.7	30.4

*Products with color ▭ are available stock and short lead time.

VC17

W-ROBOT® Linear Drives

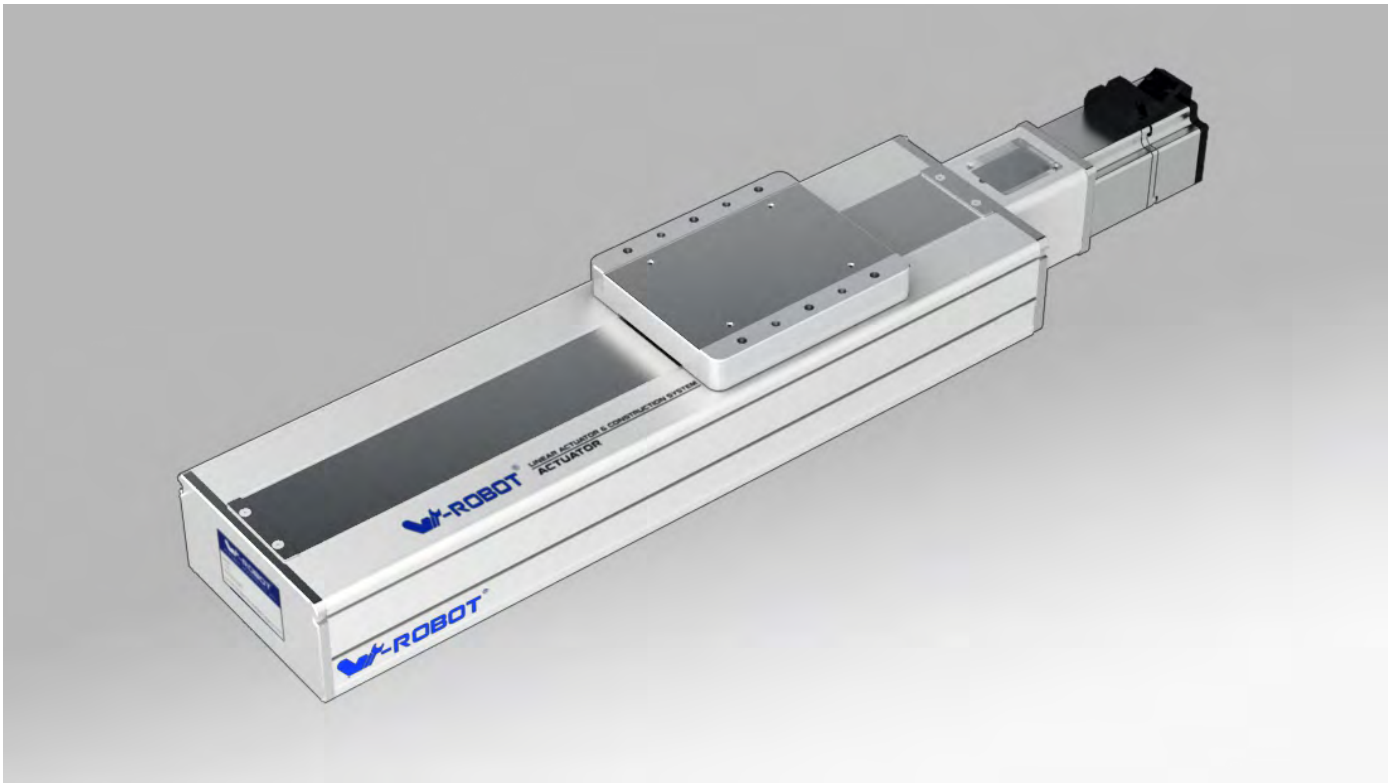

Motor direction

BA

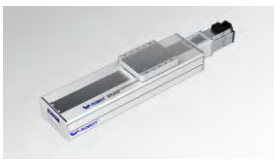
BC

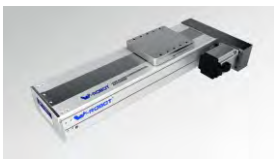
BR

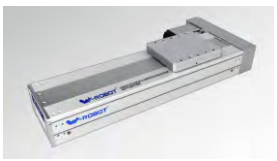
BL

M

Guide for Model Selection

VC17 – L20 – P – S100 – BC – ZP75B – C3 – ____

Base Style	
V	Vseries
C	Cleanse Fully-enclosed
17	Body width170

Ball Screw Lead	
L5	5mm
L10	10mm
L20	20mm
L40	40mm

Accuracy class	
P	High precision
C	Common precision

Stroke(mm)
100-1500

Motor way	
BA	Basis
BC	External
BR	Right Side
BL	Left Side
M	Build-In Motor

Motor Type	
P	Panasonic
M	Mitsubishi
Y	Yaskawa
T	Delta
W	W-Robot

* For Z: Motor is from clients

Motor power	
40	400W
75	750W
Brakes	
No	No brake
B	With brake

Original Sensor position		Sensor switch	
External		External	
C	Motor side	2	2pcs
D	Oppsite motor side	3	3pcs
E	No	No sensor	

Sensor type	
No	NPN
P	PNP

Non-standard, d.c.,	
No	Standard type
BL1	Detailed information please see page 032
B2	
D01	
U01	
UD01	
H01	
HU01	
HD01	
HUD01	
M01	
S01	
T	

If the linear satges require the extra sealing strip,please add the "T"at the end of the model numbers.

Specification

Motor power AC (W)		400W/750W			
BallScrewØ(mm)		(C7)	20		
		(C5)	20		
Repeatability (mm)		(C7)	±0.01		
		(C5)	±0.006		
BallScrew Lead(mm)		5	10	20	40
MaximumSpeed(mm/sec) 3000 Motor Speed(rpm/mim)		250	500	1000	2000
Maximum Payload(kg)	Horizontal	120/120	105/115	75/83	35/50
	Vertical	45/50	35/40	20/25	5/10
RatedThrust(N)		1388/2563	694/1281	347/640	170/320
Linear Guide (mm)		20x15.5 -2			
Coupling (mm) (Motor side) x (Ball Screw Side)		11x12	14x12	14x12	16x12	19x12
Motor Output		200W		400W	750W
Home Sensor		Outside	EE-SX672(NPN) EE-SX672P(PNP)		
		Outside Guide	EE-SX674(NPN) EE-SX674P(PNP)		

Wiring drawing of inductor(original point and endpoint)

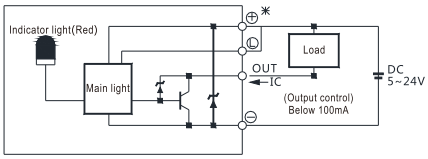

(Figure 1)

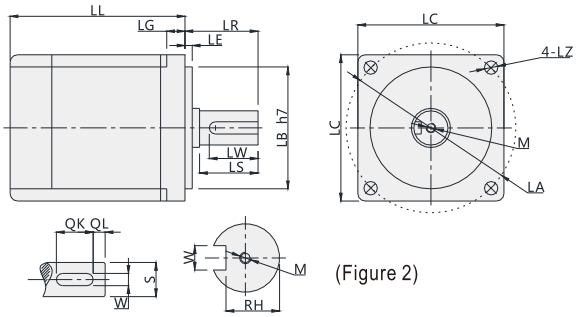

(Figure 2)

* Above repeatability is within strok 300mm,if logner travel needed,it willbe lower.In case stroke over 600 will lead to swing of ball screw,please slow down the speed 15%.Please note figure 2 motor size is same with table 1, or needed to replace coupler and motor holder.)

Servo Motor Matches List

(Table 1)

Servo motor size																			
Power(W)	Brand	Type		LL	LL(Brakes)	LA	LE	LZ	LC	LG	LW	RH	W	LR	S	LB	M	QK	QL
200W	Panasonic	MSMJ022G1□	V:With brake U:No brake	79.5	115.5	70	3	4.5	60	6.5	20	8.5	4h9	30	11h6	50h7	M4x8L	-	-
	Delta	ECMA-C20602□S	S:With brake R:No brake	105.5	141.5	70	3	5.5	60	7.5	20	11	5	30	14h6	50h7	M4x15L	-	-
	Mitsubishi	HC-KFS23□K	B:With brake □:No brake	99.5	131.5	70	3	5.8	62	7	-	-	-	30	14h6	50h7	-	-	-
400W	Panasonic	MSMJ042G1□	V:With brake U:No brake	99	135	70	3	4.5	60	6.5	20	11	5h9	30	14h6	50h7	M5x10L	-	-
	Delta	ECMA-C20604□S	S:With brake R:No brake	130.7	166.6	70	3	5.5	60	7.5	20	11	5	30	14h6	50h7	M4x15L	-	-
		ECMA-C20804□S	S:With brake R:No brake	112.3	152.8	90	3	6.6	80	8	20	11	5	35	14h6	70h7	M4x15L	-	-
	Mitsubishi	HC-KFS43□K	B:With brake □:No brake	124.5	165.5	70	3	5.8	62	7	-	-	-	30	14h6	50h7	-	-	-
750W	Panasonic	MSMJ082G1□	V:With brake U:No brake	122	149	90	3	6	80	8	25	15.5	6h9	35	19h6	70h7	M5x10L	-	-
	Delta	ECMA-C20807□S	S:With brake R:No brake	138.3	178	90	3	6.6	80	8	25	15.5	6	35	19h6	70h7	M6x20L	-	-
		ECMA-C20907□S	S:With brake R:No brake	130.2	161.3	100	3	6.6	86	8	20	13	5	35	16h6	80h7	M5x15L	-	-
	Mitsubishi	HC-KFS73□K	B:With brake □:No brake	142	177.5	90	3	6.6	82	8	-	-	-	40	19h6	70h7	-	-	-

□ Stand for empty

Max. Payload Diameters Table

(Unit : mm)

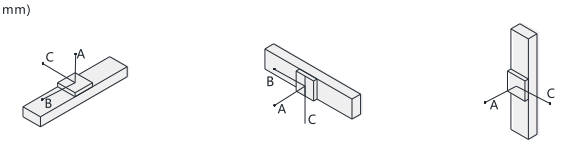

Horizontal installation		A	B	C
Lead 5	60kg	2980	435	577
	100kg	2000	207	331
	120kg	1846	202	269
Lead 10	60kg	2440	428	570
	75kg	2010	253	336
	95kg	1851	207	274
Lead 20	30kg	2652	899	994
	50kg	1775	526	593
	83kg	1396	317	267

Wall installation		A	B	C
Lead 5	60kg	530	350	2438
	100kg	277	165	1995
	120kg	215	118	1836
Lead 10	60kg	533	353	2441
	75kg	293	179	2010
	95kg	230	133	1851
Lead 20	30kg	982	815	2573
	50kg	569	442	1680
	83kg	337	232	1258

Vertical installation		A	C
Lead 5	20kg	1510	1220
	30kg	1210	990
	50kg	992	962
Lead 10	15kg	1778	1778
	25kg	1050	1050
	40kg	750	750
Lead 20	5kg	1700	1700
	10kg	2202	2202
	25kg	1485	1485

Max. Static Torque Table

(Unit : N.m)

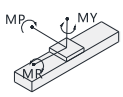

Maximum static torque	
MY	1032
MP	1034
MR	908

VC17

V-ROBOT® Linear Drives

BA: Basis

Unit (mm)

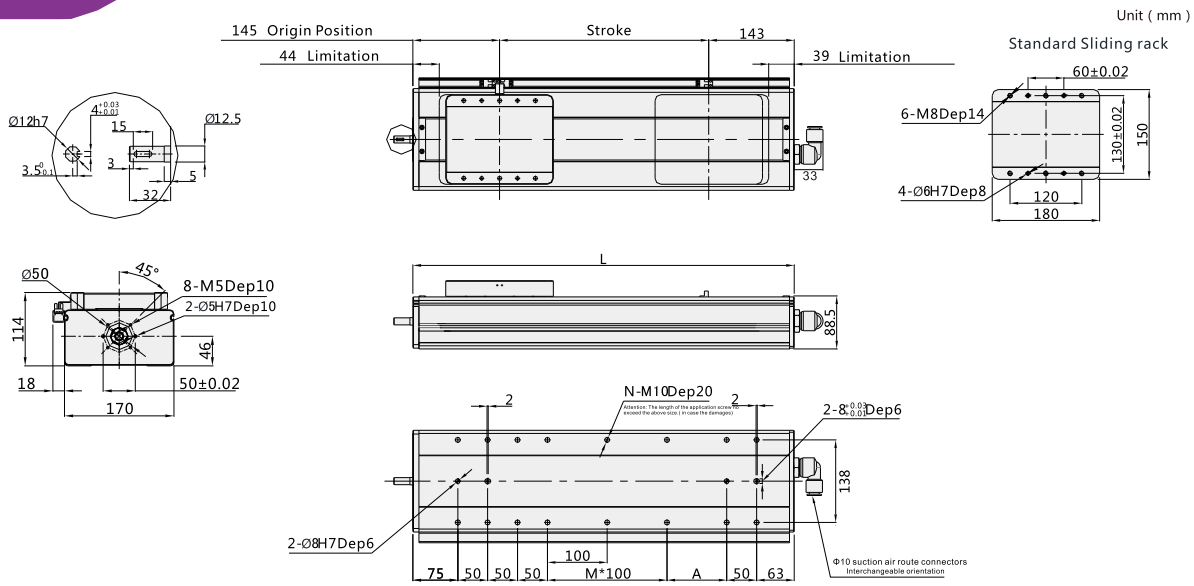

Note: Not including motor weight. *In case special stroke please contact technical services.

Working Stroke	100	150	200	250	300	350	400	450	500	550	600	650	700	750	800	850	900	950	1000	1050	1100	1150	1200	1250	1300	1350	1400	1450	1500
L	388	438	488	538	588	638	688	738	788	838	888	938	988	1038	1088	1138	1188	1238	1288	1338	1388	1438	1488	1538	1588	1638	1688	1738	1788
M	0	0	1	1	2	2	3	3	4	4	5	5	6	6	7	7	8	8	9	9	10	10	11	11	12	12	13	13	14
N	12	12	14	14	16	16	18	18	20	20	22	22	24	24	26	26	28	28	30	30	32	32	34	34	36	36	38	38	40
A	50	100	50	100	50	100	50	100	50	100	50	100	50	100	50	100	50	100	50	100	50	100	50	100	50	100	50	100	50
Weight KG	11.4	12.1	12.8	13.5	14.2	14.9	15.6	16.3	17	17.7	18.4	19.1	19.8	20.5	21.2	21.9	22.6	23.3	24	24.7	25.4	26.1	26.8	27.5	28.2	28.9	29.6	30.4	31

*Products with color ▭ are available stock and short lead time.

BC: External

Unit (mm)

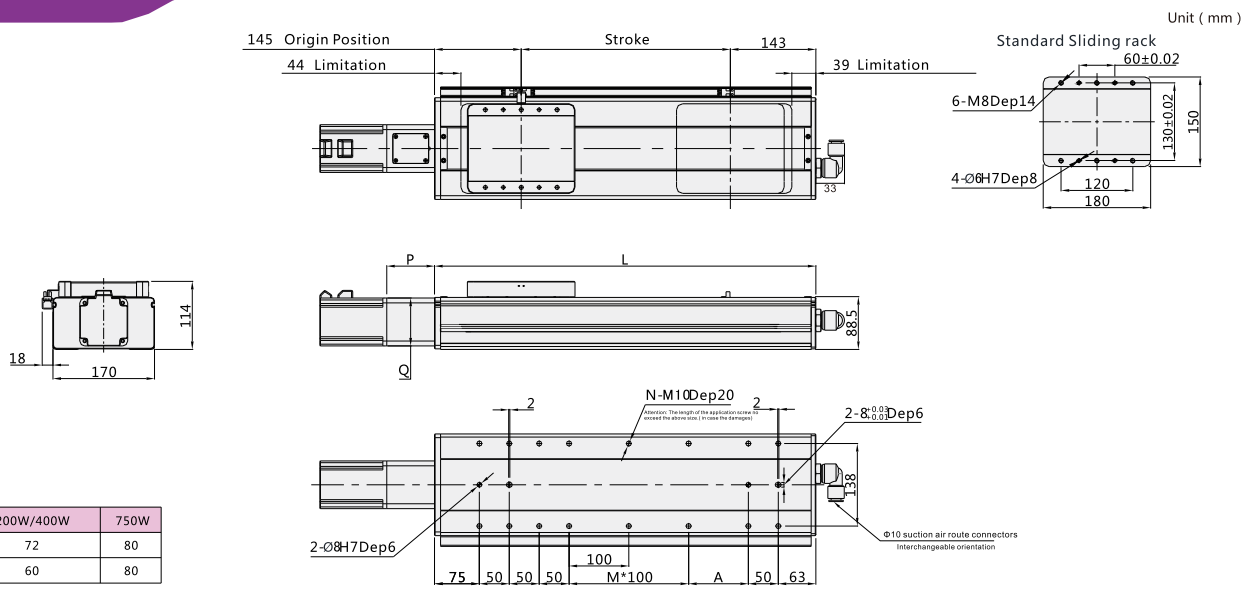

Motor specifications	200W/400W	750W
Corresponding to the P value	72	80
Corresponding to the Q value	60	80

Note: Not including motor weight. *In case special stroke please contact technical services.

Working Stroke	100	150	200	250	300	350	400	450	500	550	600	650	700	750	800	850	900	950	1000	1050	1100	1150	1200	1250	1300	1350	1400	1450	1500
L	388	438	488	538	588	638	688	738	788	838	888	938	988	1038	1088	1138	1188	1238	1288	1338	1388	1438	1488	1538	1588	1638	1688	1738	1788
M	0	0	1	1	2	2	3	3	4	4	5	5	6	6	7	7	8	8	9	9	10	10	11	11	12	12	13	13	14
N	12	12	14	14	16	16	18	18	20	20	22	22	24	24	26	26	28	28	30	30	32	32	34	34	36	36	38	38	40
A	50	100	50	100	50	100	50	100	50	100	50	100	50	100	50	100	50	100	50	100	50	100	50	100	50	100	50	100	50
Weight KG	12.1	12.8	13.5	14.2	14.9	15.6	16.3	17	17.7	18.4	19.1	19.8	20.5	21.2	21.9	22.6	23.3	24	24.7	25.4	26.1	26.8	27.5	28.2	28.9	29.6	30.4	31	31.7

*Products with color ▭ are available stock and short lead time.

BL: Left Side

Unit (mm)

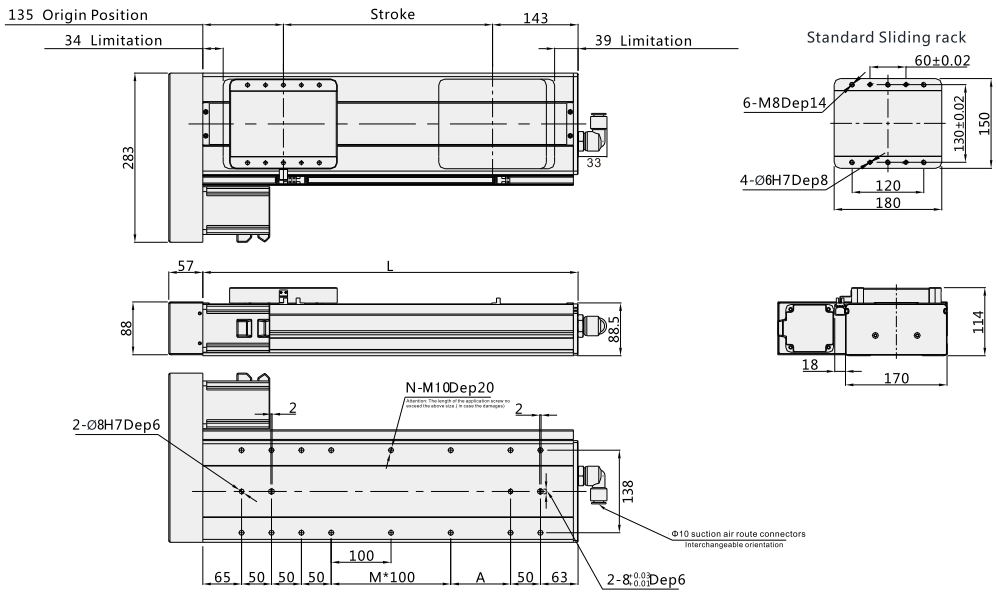

Note: Not including motor weight. *In case special stroke please contact technical services.

Working Stroke	100	150	200	250	300	350	400	450	500	550	600	650	700	750	800	850	900	950	1000	1050	1100	1150	1200	1250	1300	1350	1400	1450	1500
L	378	428	478	528	578	628	678	728	778	828	878	928	978	1028	1078	1128	1178	1228	1278	1328	1378	1428	1478	1528	1578	1628	1678	1728	1778
M	0	0	1	1	2	2	3	3	4	4	5	5	6	6	7	7	8	8	9	9	10	10	11	11	12	12	13	13	14
N	12	12	14	14	16	16	18	18	20	20	22	22	24	24	26	26	28	28	30	30	32	32	34	34	36	36	38	38	40
A	50	100	50	100	50	100	50	100	50	100	50	100	50	100	50	100	50	100	50	100	50	100	50	100	50	100	50	100	50
Weight KG	14.1	14.8	15.5	16.2	16.9	17.6	18.3	19	19.7	20.4	21.1	21.8	22.5	23.2	23.9	24.6	25.3	26	26.7	27.4	28.1	28.8	29.5	30.2	30.9	31.6	32.4	33	33.7

*Products with color ____ are available stock and short lead time.

BR: Right Side

Unit (mm)

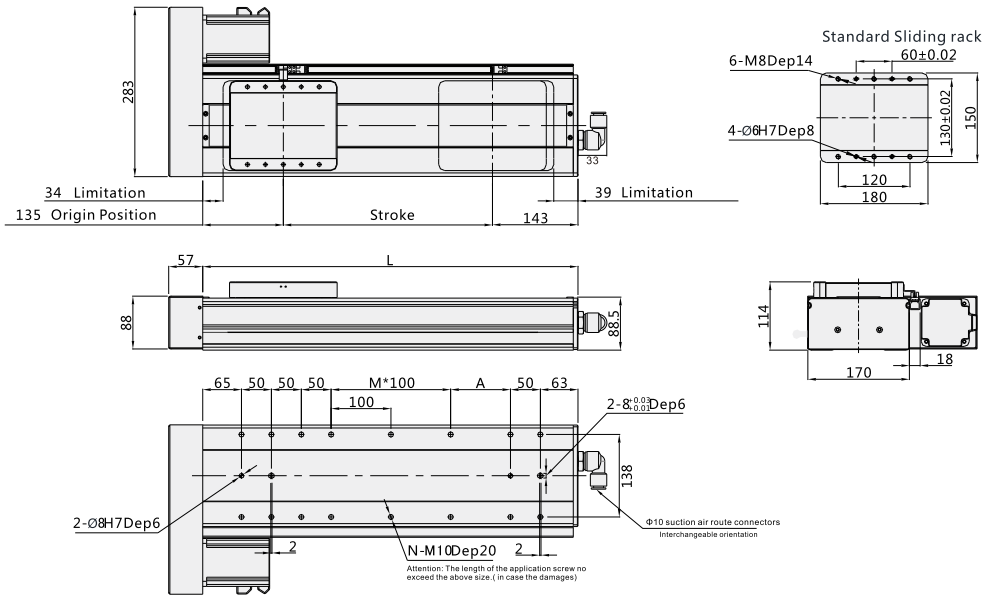

Note: Not including motor weight. *In case special stroke please contact technical services.

Working Stroke	100	150	200	250	300	350	400	450	500	550	600	650	700	750	800	850	900	950	1000	1050	1100	1150	1200	1250	1300	1350	1400	1450	1500
L	378	428	478	528	578	628	678	728	778	828	878	928	978	1028	1078	1128	1178	1228	1278	1328	1378	1428	1478	1528	1578	1628	1678	1728	1778
M	0	0	1	1	2	2	3	3	4	4	5	5	6	6	7	7	8	8	9	9	10	10	11	11	12	12	13	13	14
N	12	12	14	14	16	16	18	18	20	20	22	22	24	24	26	26	28	28	30	30	32	32	34	34	36	36	38	38	40
A	50	100	50	100	50	100	50	100	50	100	50	100	50	100	50	100	50	100	50	100	50	100	50	100	50	100	50	100	50
Weight KG	14.1	14.8	15.5	16.2	16.9	17.6	18.3	19	19.7	20.4	21.1	21.8	22.5	23.2	23.9	24.6	25.3	26	26.7	27.4	28.1	28.8	29.5	30.2	30.9	31.6	32.4	33	33.7

*Products with color ____ are available stock and short lead time.

M: Buil-in

Unit (mm)

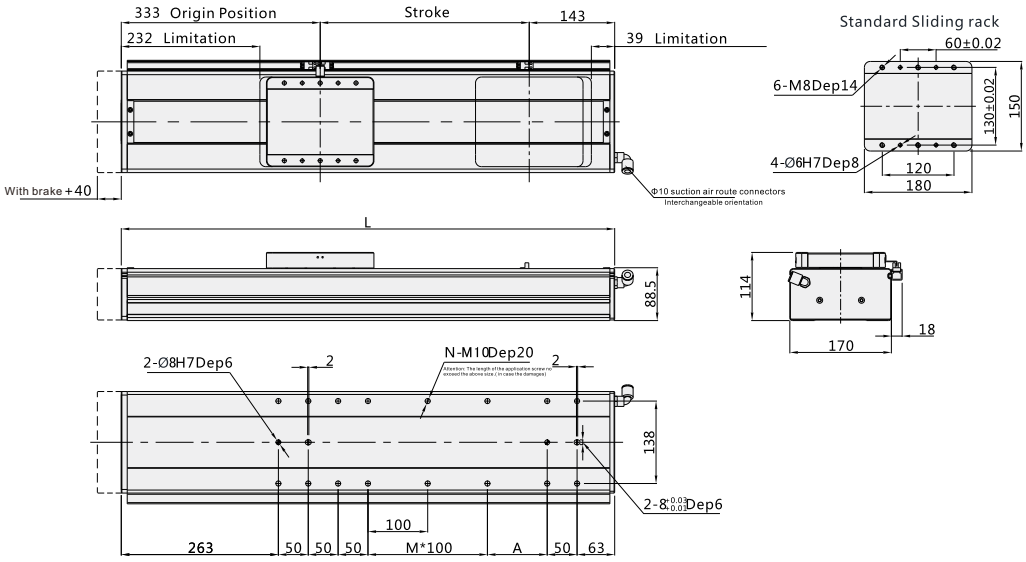

Note: Not including motor weight. *In case special stroke please contact technical services.

Working Stroke	100	150	200	250	300	350	400	450	500	550	600	650	700	750	800	850	900	950	1000	1050	1100	1150	1200	1250	1300	1350	1400	1450	1500
L	576	626	676	726	776	826	876	926	976	1026	1076	1126	1176	1226	1276	1326	1376	1426	1476	1526	1576	1626	1676	1726	1776	1826	1876	1926	1976
M	0	0	1	1	2	2	3	3	4	4	5	5	6	6	7	7	8	8	9	9	10	10	11	11	12	12	13	13	14
N	12	12	14	14	16	16	18	18	20	20	22	22	24	24	26	26	28	28	30	30	32	32	34	34	36	36	38	38	40
A	50	100	50	100	50	100	50	100	50	100	50	100	50	100	50	100	50	100	50	100	50	100	50	100	50	100	50	100	50
Weight KG	12.8	13.5	14.2	14.9	15.6	16.3	17	17.7	18.4	19.1	19.8	20.5	21.2	21.9	22.6	23.3	24	24.7	25.4	26.1	26.8	27.5	28.2	28.9	29.6	30.3	31	31.7	32.4

*Products with color ▭ are available stock and short lead time.

VC22

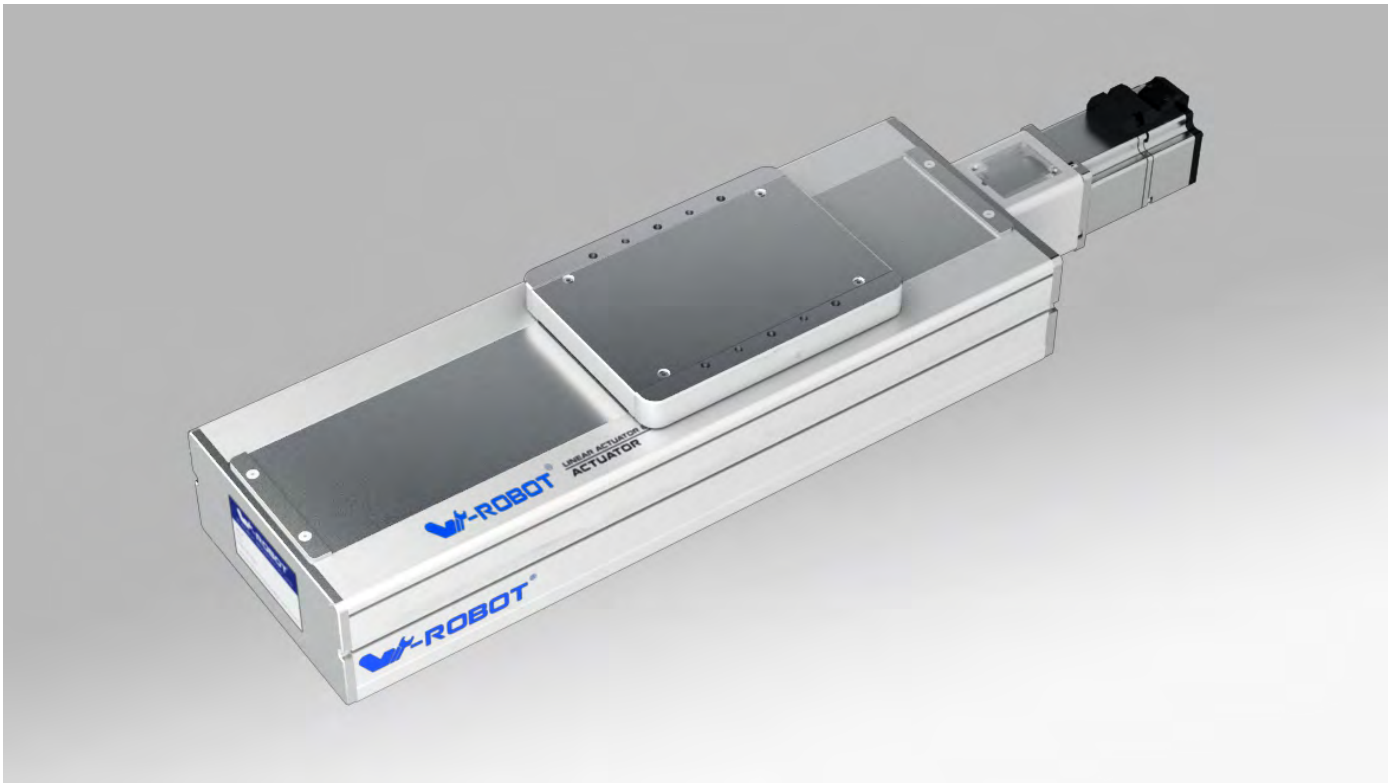

Motor direction

BA

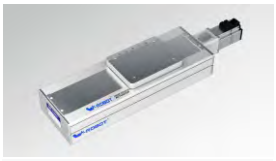

BC

BL

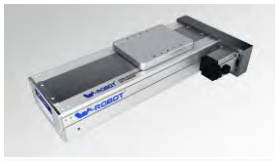

BR

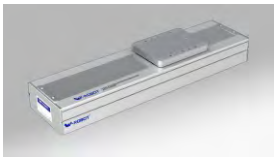

M

Guide for Model Selection

VC22 – L25 – P – S100 – BC – ZP75B – C3 – ___

Base Style	
V	Vseries
C	Cleanse Fully-enclosed
22	Body width220

Ball Screw Lead	
L5	5mm
L10	10mm
L25	25mm

Accuracy class	
P	High precision
C	Common precision

Stroke(mm)
100-1500

Motor way	
BA	Basis
BC	External
BR	Right Side
BL	Left Side
M	Build-In Motor

Motor Type	
P	Panasonic
M	Mitsubishi
Y	Yaskawa
T	Delta
W	W-Robot

* For Z: Motor is from clients

Motor power	
75	750W

Brakes	
No	No brake
B	With brake

Original Sensor position	
External	
C	Motor side
D	Oppsite motor side
E	No

Sensor switch	
External	
2	2pcs
3	3pcs
No sensor	

Sensor type	
No	NPN
P	PNP

Non-standard, d.c.,	
No	Standard type
BL1	Detailed information please see page032
B2	
D01	
U01	
UD01	
H01	
HU01	
HD01	
HUD01	
M01	
S01	
T	

If the linear satges require the extra sealing strip,please add the "T"at the end of the model numbers.

Specification

Motor power AC (W)		750W		
BallScrew ∅ (mm)		(C7)	25	
		(C5)	25	
Repeatability (mm)		(C7)	±0.01	
		(C5)	±0.006	
BallScrew Lead(mm)		5	10	25
MaximumSpeed(mm/sec) 3000 Motor Speed(rpm/mim)		250	500	1250
Maximum Payload(kg)	Horizontal	150	140	120
	Vertical	65	54	25
RatedThrust(N)		2100	1050	420
Linear Guide (mm)		23x18 -2		
Coupling (mm) (Motor side) x (Ball Screw Side)		19x16		
Motor Output		750W		
Home Sensor		Outside	EE-SX672(NPN)	EE-SX672P(PNP)
		Outside Guide	EE-SX674(NPN)	EE-SX674P(PNP)

Wiring drawing of inductor(original point and endpoint)

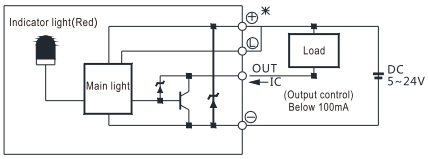

(Figure 1)

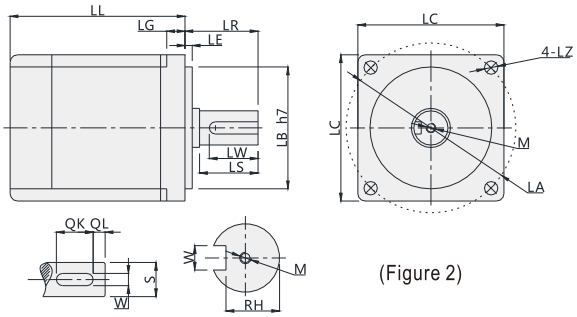

(Figure 2)

* Above repeatability is within strok 300mm,if logner travel needed,it willbe lower.In case stroke over 1000 will lead to swing of ball screw,please slow down the speed 15%.Please note figure 2 motor size is same with table 1, or needed to replace coupler and motor holder.)

Servo Motor Matches List

(Table 1)

Servo motor size																			
Power(W)	Brand	Type		LL	LL(Brakes)	LA	LE	LZ	LC	LG	LW	RH	W	LR	S	LB	M	QK	QL
750W	Panasonic	MSMJ082G1□	V:With brake U:No brake	122	149	90	3	6	80	8	25	15.5	6h9	35	19h6	70h7	M5x10L	-	-
	Delta	ECMA-C20807□S	S:With brake R:No brake	138.3	178	90	3	6.6	80	8	25	15.5	6	35	19h6	70h7	M6x20L	-	-
		ECMA-C20907□S	S:With brake R:No brake	130.2	161.3	100	3	6.6	86	8	20	13	5	35	16h6	80h7	M5x15L	-	-
	Mitsubishi	HC-KFS73□K	B:With brake □:No brake	142	177.5	90	3	6.6	82	8	-	-	-	40	19h6	70h7	-	-	-

□ Stand for empty

Max. Payload Diameters Table

(Unit : mm)

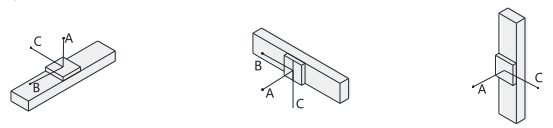

Horizontal installation		A	B	C
Lead 5	60kg	3672	653	866
	100kg	3000	370	497
	150kg	2493	273	363
Lead 10	60kg	2652	899	994
	100kg	1775	526	593
	150kg	1396	317	267
Lead 25	50kg	2862	956	1191
	80kg	2412	581	773
	120kg	2025	373	556

Wall installation		A	B	C
Lead 5	60kg	795	525	3657
	100kg	416	248	2993
	150kg	290	159	2479
Lead 10	60kg	982	815	2573
	100kg	569	442	1680
	150kg	337	232	1258
Lead 25	50kg	1207	879	2862
	80kg	779	504	2412
	120kg	515	295	2025

Vertical installation		A	C
Lead 5	30kg	2688	2688
	50kg	1893	1893
	70kg	1640	1640
Lead 10	20kg	2297	2297
	30kg	1518	1518
	45kg	999	999
Lead 25	15kg	2767	2767
	20kg	2100	2100
	25kg	1702	1702

Max. Static Torque Table

(Unit : N.m)

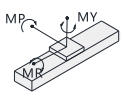

Maximum static torque	
MY	2052
MP	2052
MR	1810

BA: Basis

Unit (mm)

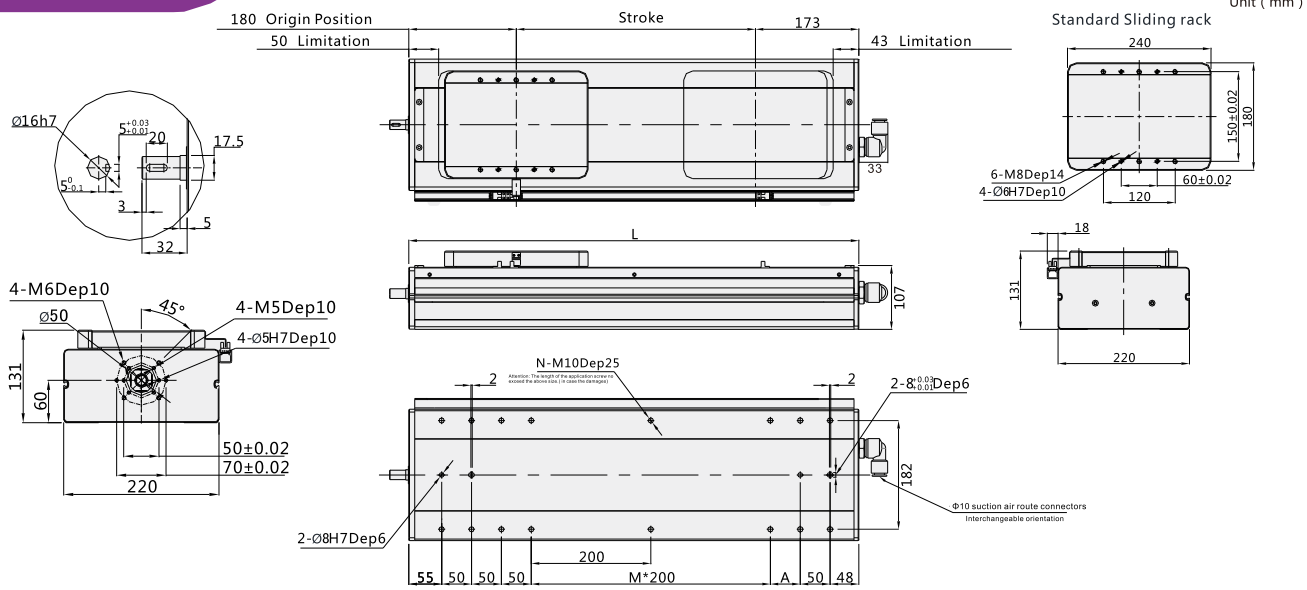

Note: Not including motor weight. *In case special stroke please contact technical services.

Working Stroke	100	150	200	250	300	350	400	450	500	550	600	650	700	750	800	850	900	950	1000	1050	1100	1150	1200	1250	1300	1350	1400	1450	1500
L	453	503	553	603	653	703	753	803	853	903	953	1003	1053	1103	1153	1203	1253	1303	1353	1403	1453	1503	1553	1603	1653	1703	1753	1803	1853
M	0	0	1	1	1	1	2	2	2	2	3	3	3	3	4	4	4	4	5	5	5	5	6	6	6	6	7	7	7
N	12	12	14	14	14	14	16	16	16	16	18	18	18	18	20	20	20	20	22	22	22	22	24	24	24	24	26	26	26
A	150	200	50	100	150	200	50	100	150	200	50	100	150	200	50	100	150	200	50	100	150	200	50	100	150	200	50	100	150
Weight KG	21.7	22.9	24.1	25.3	26.6	27.8	29	30.2	31.4	32.7	33.9	35.1	36.3	37.5	38.8	40	41.2	42.4	43.6	44.9	46.1	47.3	48.5	49.7	51	52.2	53.4	54.6	55.8

*Products with color ▭ are available stock and short lead time.

BC: External

Unit (mm)

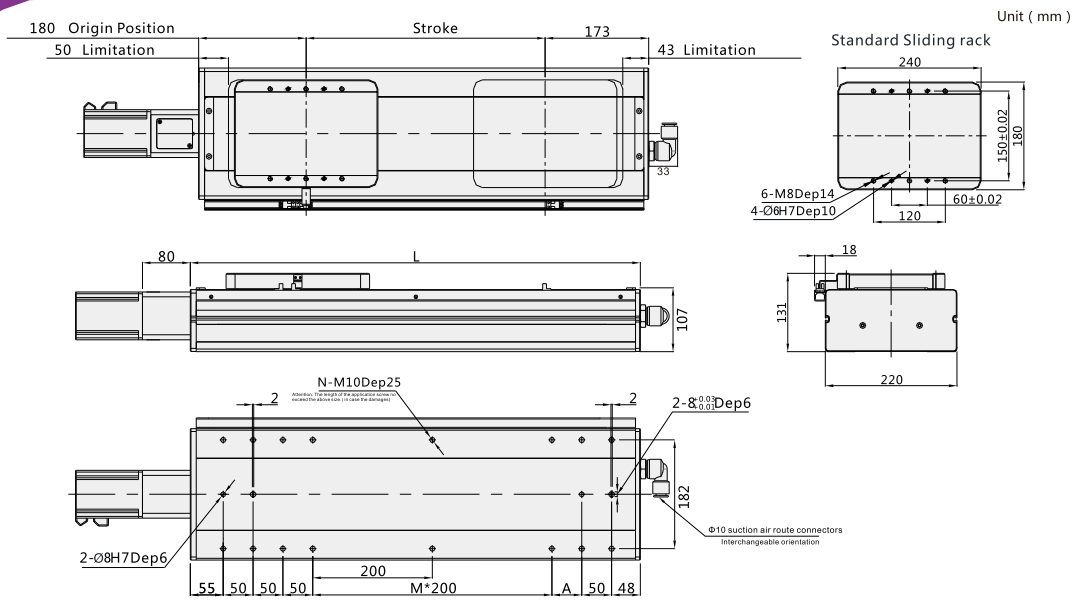

Note: Not including motor weight. *In case special stroke please contact technical services.

Working Stroke	100	150	200	250	300	350	400	450	500	550	600	650	700	750	800	850	900	950	1000	1050	1100	1150	1200	1250	1300	1350	1400	1450	1500
L	453	503	553	603	653	703	753	803	853	903	953	1003	1053	1103	1153	1203	1253	1303	1353	1403	1453	1503	1553	1603	1653	1703	1753	1803	1853
M	0	0	1	1	1	1	2	2	2	2	3	3	3	3	4	4	4	4	5	5	5	5	6	6	6	6	7	7	7
N	12	12	14	14	14	14	16	16	16	16	18	18	18	18	20	20	20	20	22	22	22	22	24	24	24	24	26	26	26
A	150	200	50	100	150	200	50	100	150	200	50	100	150	200	50	100	150	200	50	100	150	200	50	100	150	200	50	100	150
Weight KG	22.9	24.1	25.3	26.6	27.8	29	30.2	31.4	32.7	33.9	35.1	36.3	37.5	38.8	40	41.2	42.4	43.6	44.9	46.1	47.3	48.5	49.7	51	52.2	53.4	54.6	55.8	57

*Products with color ▭ are available stock and short lead time.

VC22

W-ROBOT® Linear Drives

BL: Left Side

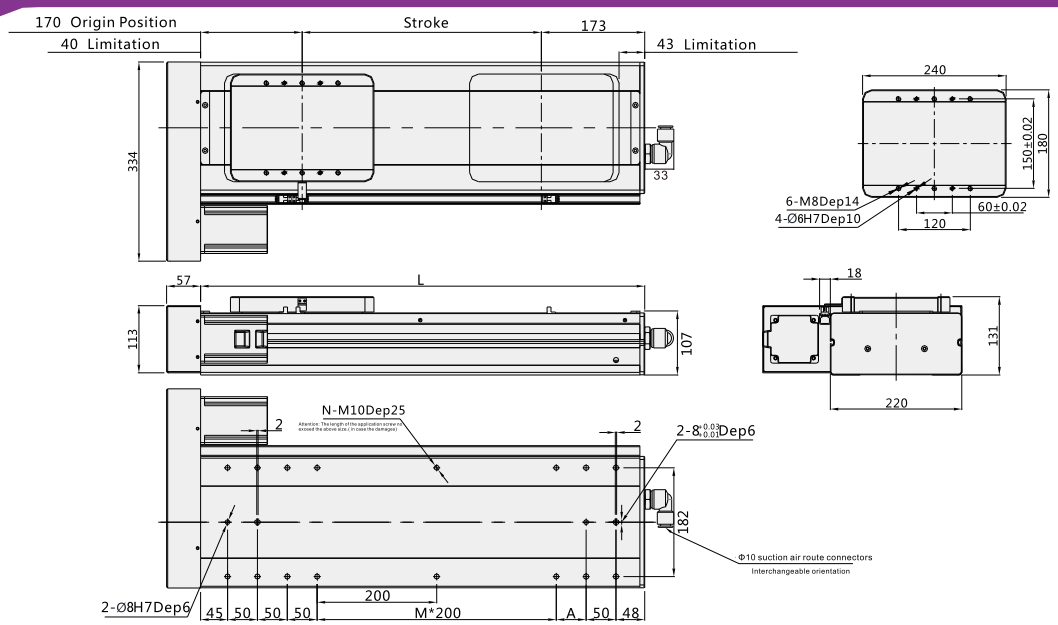

Note: Not including motor weight. *In case special stroke please contact technical services.

Working Stroke	100	150	200	250	300	350	400	450	500	550	600	650	700	750	800	850	900	950	1000	1050	1100	1150	1200	1250	1300	1350	1400	1450	1500
L	443	493	543	593	643	693	743	793	843	893	943	993	1043	1093	1143	1193	1243	1293	1343	1393	1443	1493	1543	1593	1643	1693	1743	1793	1843
M	0	0	1	1	1	1	2	2	2	2	3	3	3	3	4	4	4	4	5	5	5	5	6	6	6	6	7	7	7
N	12	12	14	14	14	14	16	16	16	16	18	18	18	18	20	20	20	20	22	22	22	22	24	24	24	24	26	26	26
A	150	200	50	100	150	200	50	100	150	200	50	100	150	200	50	100	150	200	50	100	150	200	50	100	150	200	50	100	150
Weight KG	22.9	24.1	25.3	26.6	27.8	29	30.2	31.4	32.7	33.9	35.1	36.3	37.5	38.8	40	41.2	42.4	43.6	44.9	46.1	47.3	48.5	49.7	51	52.2	53.4	54.6	55.8	57

*Products with color ▭ are available stock and short lead time.

BR: Right Side

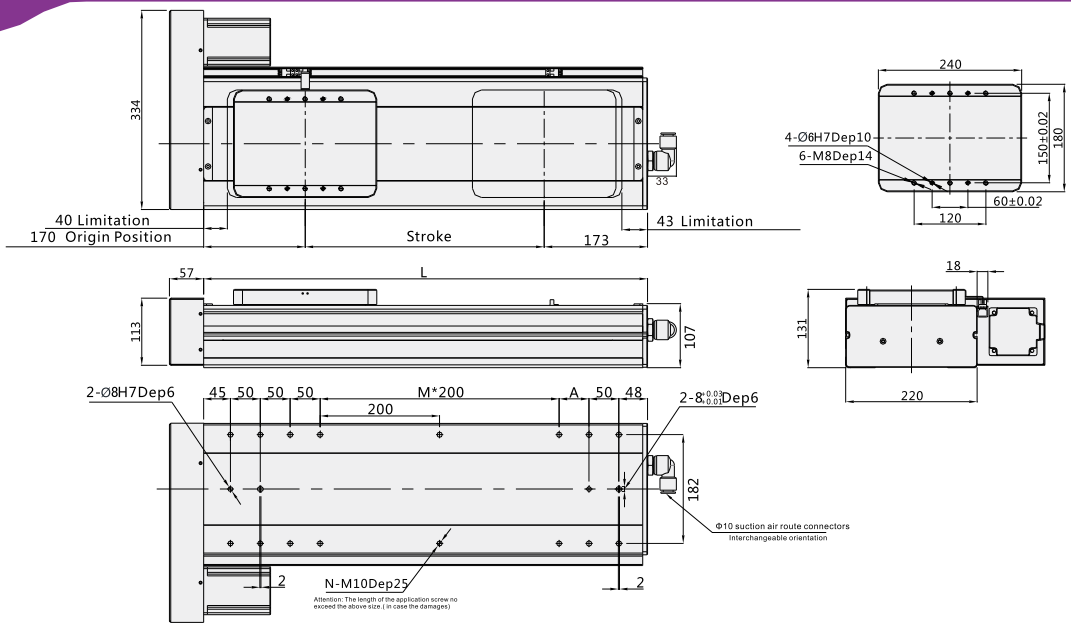

Note: Not including motor weight. *In case special stroke please contact technical services.

Working Stroke	100	150	200	250	300	350	400	450	500	550	600	650	700	750	800	850	900	950	1000	1050	1100	1150	1200	1250	1300	1350	1400	1450	1500
L	443	493	543	593	643	693	743	793	843	893	943	993	1043	1093	1143	1193	1243	1293	1343	1393	1443	1493	1543	1593	1643	1693	1743	1793	1843
M	0	0	1	1	1	1	2	2	2	2	3	3	3	3	4	4	4	4	5	5	5	5	6	6	6	6	7	7	7
N	12	12	14	14	14	14	16	16	16	16	18	18	18	18	20	20	20	20	22	22	22	22	24	24	24	24	26	26	26
A	150	200	50	100	150	200	50	100	150	200	50	100	150	200	50	100	150	200	50	100	150	200	50	100	150	200	50	100	150
Weight KG	22.9	24.1	25.3	26.6	27.8	29	30.2	31.4	32.7	33.9	35.1	36.3	37.5	38.8	40	41.2	42.4	43.6	44.9	46.1	47.3	48.5	49.7	51	52.2	53.4	54.6	55.8	57

*Products with color ▭ are available stock and short lead time.

M: Buil-in

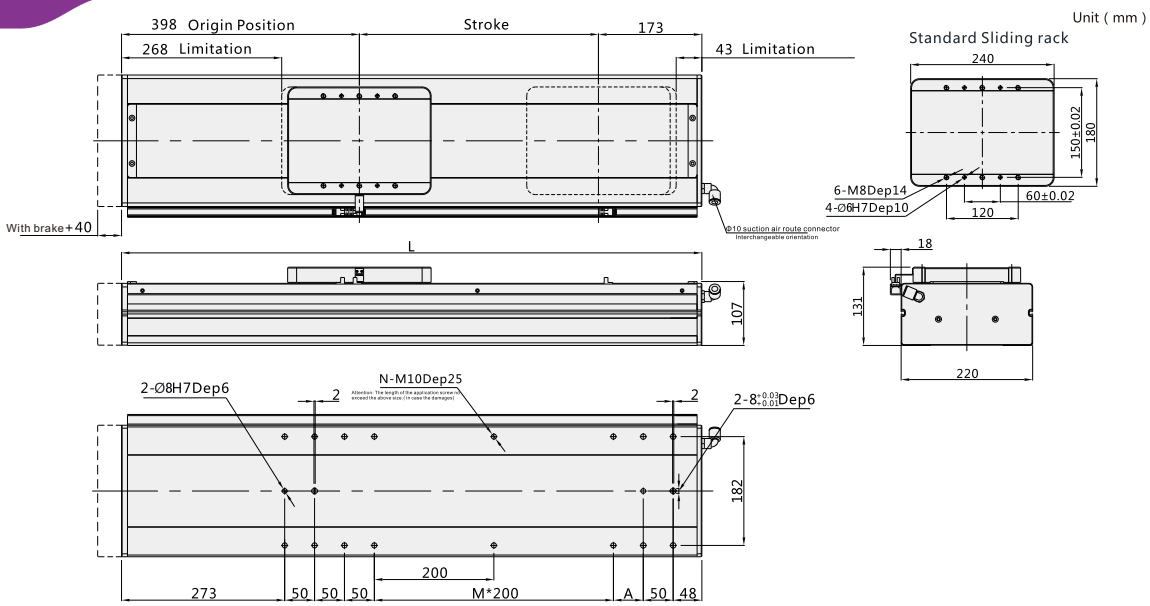

Note: Not including motor weight. *In case special stroke please contact technical services.

Working Stroke	100	150	200	250	300	350	400	450	500	550	600	650	700	750	800	850	900	950	1000	1050	1100	1150	1200	1250	1300	1350	1400	1450	1500
L	671	721	771	821	871	921	971	1021	1071	1121	1171	1221	1271	1321	1371	1421	1471	1521	1571	1621	1671	1721	1771	1821	1871	1921	1971	2021	2071
M	0	0	1	1	1	1	2	2	2	2	3	3	3	3	4	4	4	4	5	5	5	5	6	6	6	6	7	7	7
N	12	12	14	14	14	14	16	16	16	16	18	18	18	18	20	20	20	20	22	22	22	22	24	24	24	24	26	26	26
A	150	200	50	100	150	200	50	100	150	200	50	100	150	200	50	100	150	200	50	100	150	200	50	100	150	200	50	100	150
Weight KG	22.9	24.1	25.3	26.6	27.8	29	30.2	31.4	32.7	33.9	35.1	36.3	37.5	38.8	40	41.2	42.4	43.6	44.9	46.1	47.3	48.5	49.7	51	52.2	53.4	54.6	55.8	57

*Products with color are available stock and short lead time.

Dual Motors Series

Ball screw drive
Normal environment

VF14D2

Maximum Stroke	1500mm
Maximum Payload	115KG ····· 190
Body Width	140mm

Ball screw drive
Dust-free environment

VC14D2

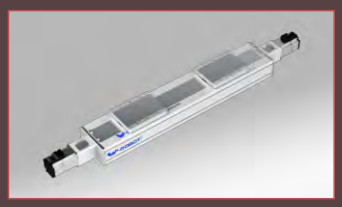

Maximum Stroke	1500mm
Maximum Payload	115KG ····· 198
Body Width	140mm

VF14D2

Motor direction

BA

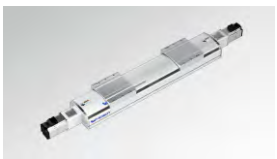

BC

BLR

Guide for Model Selection

VF14D2 — L20 — P — S100 — BC — ZP40B — C6 — ____

Base Style	
V	Vseries
F	Semiclosed with Frame Ball Screw Drive
14	Body width140

Motor Qty	
D2	Dual motor moving vis-a-vis

Ball Screw Lead	
L5	5mm
L10	10mm
L20	20mm
L40	40mm

Accuracy class	
P	High precision
C	Common precision

Stroke(mm)
100-1500

马达方式 Motor way	
BA	Basis
BC	External
BLR	Right/Left Side

Motor Type	
P	Panasonic
M	Mitsubishi
Y	Yaskawa
T	Delta
W	W-Robot

* For Z: Motor is from clients

Motor power	
40	400W
75	750W

Brakes	
No	No brake
B	With brake

Original Sensor position	
External	
C	Motor side
D	Oppsite motor side
E	No

Sensor switch	
External	
2	2pcs
6	6pcs
No sensor	

Sensor type	
No	NPN
P	PNP

Non-standard, d.c.,	
No	Standard type
BL1	Detailed information please see page 032
B2	
D01	
U01	
UD01	
H01	
HU01	
HD01	
HUD01	
M01	
S01	

VF14D2

W-ROBOT® Linear Drives

Specification

Motor power AC (W)		400W/750W			
BallScrewØ		(C7)	20		
		(C5)	20		
Repeatability (mm)		(C7)	±0.01		
		(C5)	±0.006		
BallScrew Lead(mm)		5	10	20	40
MaximumSpeed(mm/sec) 3000 Motor Speed(rpm/mim)		250	500	1000	2000
Maximum Payload(kg)	Horizontal	110/115	100/105	75/80	30/50
	Vertical	40/45	29/35	14/20	5/10
RatedThrust(N)		1388/2565	694/1281	347/640	347/640
Linear Guide (mm)		20x15.5 -2			
Coupling (mm) (Motor side) x (Ball Screw Side)		14x12		19x12	
Motor Output		400W		750W	
Home Sensor		Outside	EE-SX672(NPN) EE-SX672P(PNP)		
		Outside Guide	EE-SX674(NPN) EE-SX674P(PNP)		

Wiring drawing of inductor(original point and endpoint)

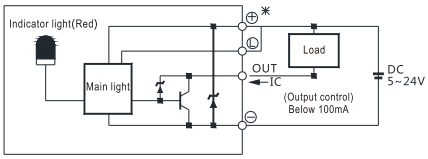

(Figure 1)

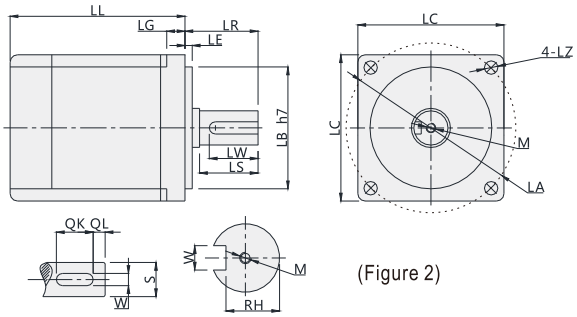

(Figure 2)

* Above repeatability is within strok 300mm,if logner travel needed,it willbe lower.In case stroke over 600 will lead to swing of ball screw,please slow down the speed 15%.Please note figure 2 motor size is same with table 1, or needed to replace coupler and motor holder.)

Servo Motor Matches List

(Table 1)

Servo motor size																			
Power(W)	Brand	Type		LL	LL(Brakes)	LA	LE	LZ	LC	LG	LW	RH	W	LR	S	LB	M	QK	QL
200W	Panasonic	MSMJ022G1□	V:With brake U:No brake	79.5	115.5	70	3	4.5	60	6.5	20	8.5	4h9	30	11h6	50h7	M4x8L	-	-
	Delta	ECMA-C20602□S	S:With brake R:No brake	105.5	141.5	70	3	5.5	60	7.5	20	11	5	30	14h6	50h7	M4x15L	-	-
	Mitsubishi	HC-KFS23□K	B:With brake □:No brake	99.5	131.5	70	3	5.8	62	7	-	-	-	30	14h6	50h7	-	-	-
400W	Panasonic	MSMJ042G1□	V:With brake U:No brake	99	135	70	3	4.5	60	6.5	20	11	5h9	30	14h6	50h7	M5x10L	-	-
	Delta	ECMA-C20604□S	S:With brake R:No brake	130.7	166.6	70	3	5.5	60	7.5	20	11	5	30	14h6	50h7	M4x15L	-	-
		ECMA-C20804□S	S:With brake R:No brake	112.3	152.8	90	3	6.6	80	8	20	11	5	35	14h6	70h7	M4x15L	-	-
	Mitsubishi	HC-KFS43□K	B:With brake □:No brake	124.5	165.5	70	3	5.8	62	7	-	-	-	30	14h6	50h7	-	-	-
750W	Panasonic	MSMJ082G1□	V:With brake U:No brake	122	149	90	3	6	80	8	25	15.5	6h9	35	19h6	70h7	M5x10L	-	-
	Delta	ECMA-C20807□S	S:With brake R:No brake	138.3	178	90	3	6.6	80	8	25	15.5	6	35	19h6	70h7	M6x20L	-	-
		ECMA-C20907□S	S:With brake R:No brake	130.2	161.3	100	3	6.6	86	8	20	13	5	35	16h6	80h7	M5x15L	-	-
	Mitsubishi	HC-KFS73□K	B:With brake □:No brake	142	177.5	90	3	6.6	82	8	-	-	-	40	19h6	70h7	-	-	-

□ Stand for empty

Max. Payload Diameters Table

(Unit : mm)

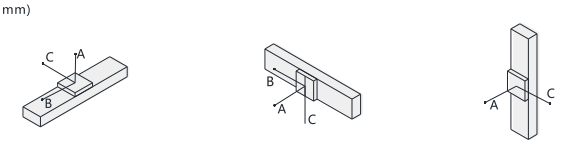

Horizontal installation		A	B	C
Lead 5	55kg	2235	327	433
	95kg	1500	156	249
	115kg	1385	152	202
Lead 10	55kg	1830	321	428
	70kg	1508	190	252
	90kg	1389	156	206
Lead 20	25kg	1989	675	746
	45kg	1332	395	445
	78kg	1047	238	201

Wall installation		A	B	C
Lead 5	55kg	378	263	1829
	95kg	208	124	1497
	115kg	163	89	1377
Lead 10	55kg	400	265	1831
	70kg	220	135	1508
	90kg	173	100	1389
Lead 20	25kg	737	612	1930
	45kg	427	332	1260
	78kg	253	174	944

Vertical installation		A	C
Lead 5	15kg	1133	915
	25kg	908	743
	45kg	745	722
Lead 10	10kg	1334	1334
	20kg	788	788
	35kg	563	563
Lead 20	1kg	1265	1265
	5kg	1114	1114
	20kg	489	489

Max. Static Torque Table

(Unit : N.m)

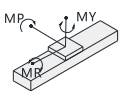

Maximum static torque	
MY	784
MP	788
MR	691

VF14D2

BA: Basis

Unit (mm)

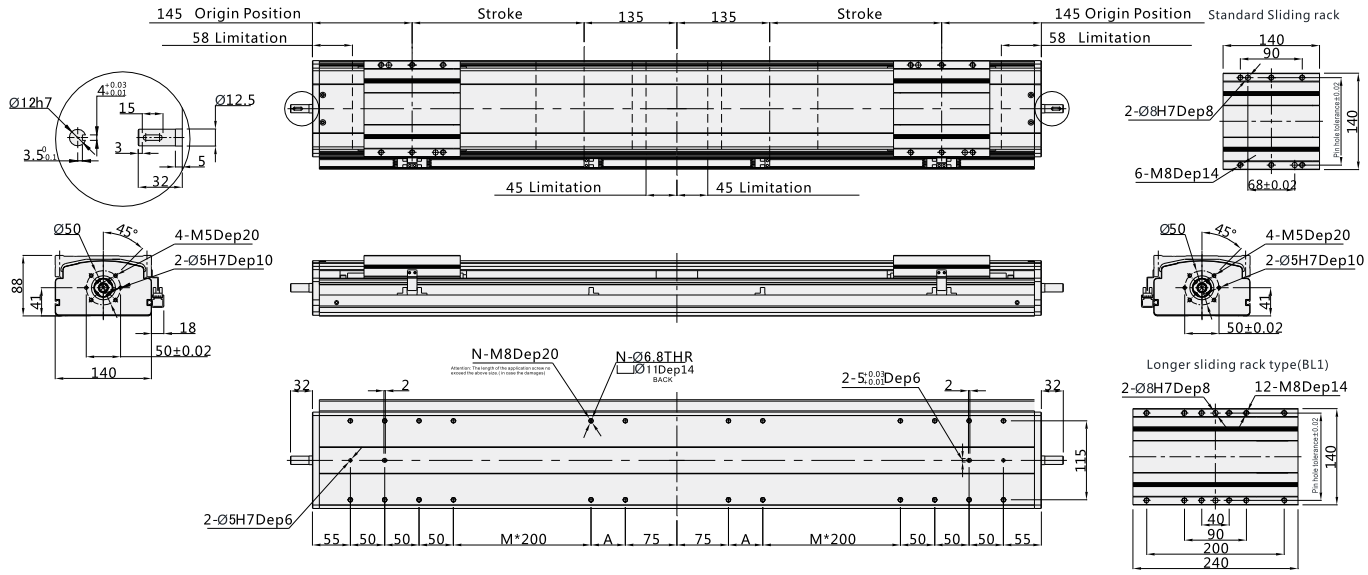

Note: Not including motor weight. *In case special stroke please contact technical services.

Working Stroke	100	150	200	250	300	350	400	450	500	550	600	650	700	750	800	850	900	950	1000	1050	1100	1150	1200	1250	1300	1350	1400	1450	1500
L	760	860	960	1060	1160	1260	1360	1460	1560	1660	1760	1860	1960	2060	2160	2260	2360	2460	2560	2660	2760	2860	2960	3060	3160	3260	3360	3460	3560
M	0	0	0	1	1	1	1	2	2	2	2	3	3	3	3	4	4	4	4	5	5	5	5	6	6	6	6	7	7
N	20	20	20	24	24	24	24	28	28	28	28	32	32	32	32	36	36	36	36	40	40	40	40	44	44	44	44	48	48
A	100	150	200	50	100	150	200	50	100	150	200	50	100	150	200	50	100	150	200	50	100	150	200	50	100	150	200	50	100
Weight KG	18.8	20.2	21.6	23.0	24.4	25.8	27.2	28.6	30.0	31.4	32.8	34.2	35.6	37.0	38.4	39.8	41.2	42.6	44.0	45.4	46.8	48.2	49.6	51.0	52.4	53.8	55.2	56.6	58.0

*Products with color ▭ are available stock and short lead time.

BC: External

Unit (mm)

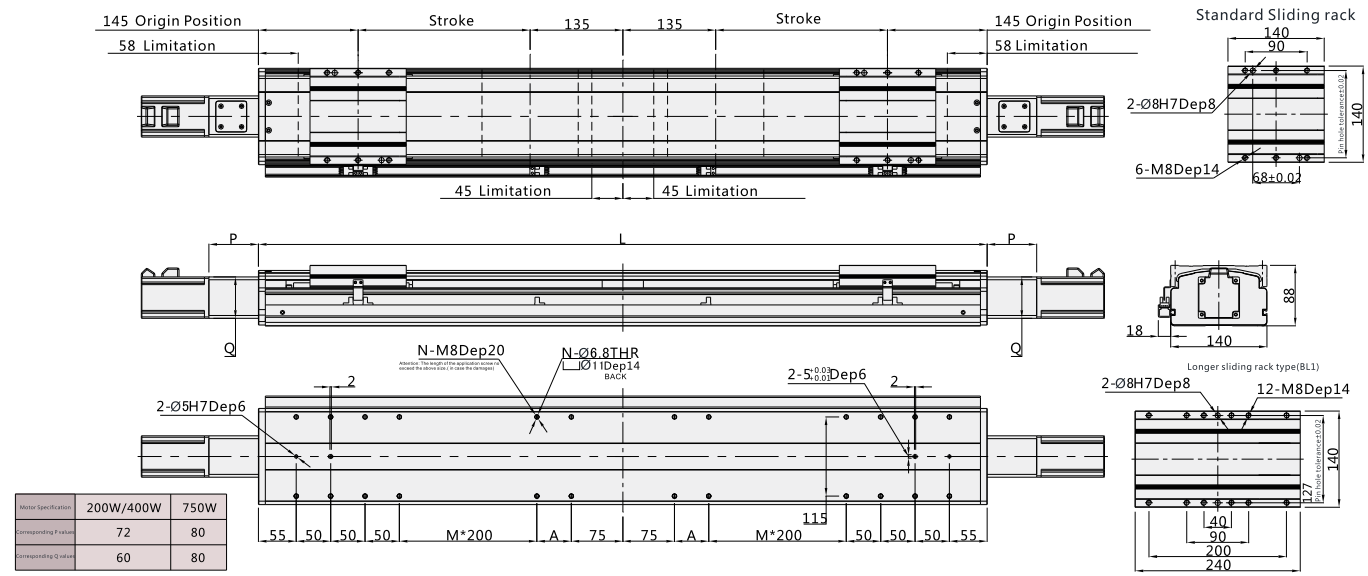

Motor Specification	200W/400W	750W
Corresponding P value	72	80
Corresponding Q value	60	80

Note:Increasing the length of sliding rack will cause the changing of stroke and original sensor position.

Note: Not including motor weight. *In case special stroke please contact technical services.

Working Stroke	100	150	200	250	300	350	400	450	500	550	600	650	700	750	800	850	900	950	1000	1050	1100	1150	1200	1250	1300	1350	1400	1450	1500
L	760	860	960	1060	1160	1260	1360	1460	1560	1660	1760	1860	1960	2060	2160	2260	2360	2460	2560	2660	2760	2860	2960	3060	3160	3260	3360	3460	3560
M	0	0	0	1	1	1	1	2	2	2	2	3	3	3	3	4	4	4	4	5	5	5	5	6	6	6	6	7	7
N	20	20	20	24	24	24	24	28	28	28	28	32	32	32	32	36	36	36	36	40	40	40	40	44	44	44	44	48	48
A	100	150	200	50	100	150	200	50	100	150	200	50	100	150	200	50	100	150	200	50	100	150	200	50	100	150	200	50	100
Weight KG	20.2	21.6	23.0	24.4	25.8	27.2	28.6	30.0	31.4	32.8	34.2	35.8	37.0	38.4	39.8	41.2	42.6	44.0	45.4	46.8	48.2	49.6	51.0	52.4	53.8	55.2	56.6	58.0	59.4

*Products with color ▭ are available stock and short lead time.

VF14D2

W-ROBOT® Linear Drives

BLR: Left/Right Side

Unit (mm)

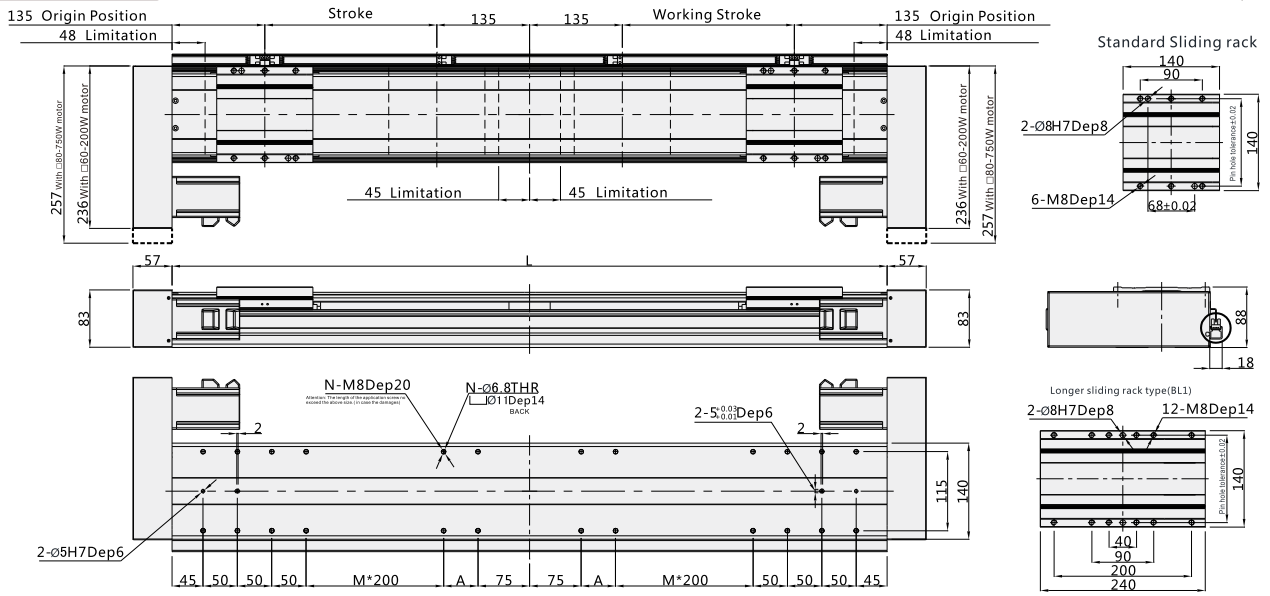

Note: Not including motor weight. *In case special stroke please contact technical services.

Note:Increasing the length of sliding rack will cause the changing of stroke and original sensor position.

Working Stroke	100	150	200	250	300	350	400	450	500	550	600	650	700	750	800	850	900	950	1000	1050	1100	1150	1200	1250	1300	1350	1400	1450	1500
L	740	840	940	1040	1140	1240	1340	1440	1540	1640	1740	1840	1940	2040	2140	2240	2340	2440	2540	2640	2740	2840	2940	3040	3140	3240	3340	3440	3540
M	0	0	0	1	1	1	1	2	2	2	2	3	3	3	3	4	4	4	4	5	5	5	5	6	6	6	6	7	7
N	20	20	20	24	24	24	24	28	28	28	28	32	32	32	32	36	36	36	36	40	40	40	40	44	44	44	44	48	48
A	100	150	200	50	100	150	200	50	100	150	200	50	100	150	200	50	100	150	200	50	100	150	200	50	100	150	200	50	100
Weight KG	22.0	23.4	24.8	26.2	27.6	29.0	30.4	31.8	33.2	34.6	36.0	37.4	38.8	40.2	41.6	43.0	44.4	45.8	47.2	48.6	50.0	51.4	52.8	54.2	55.6	57.0	58.4	59.8	61.2

*Products with color ▭ are available stock and short lead time.

VC14D2

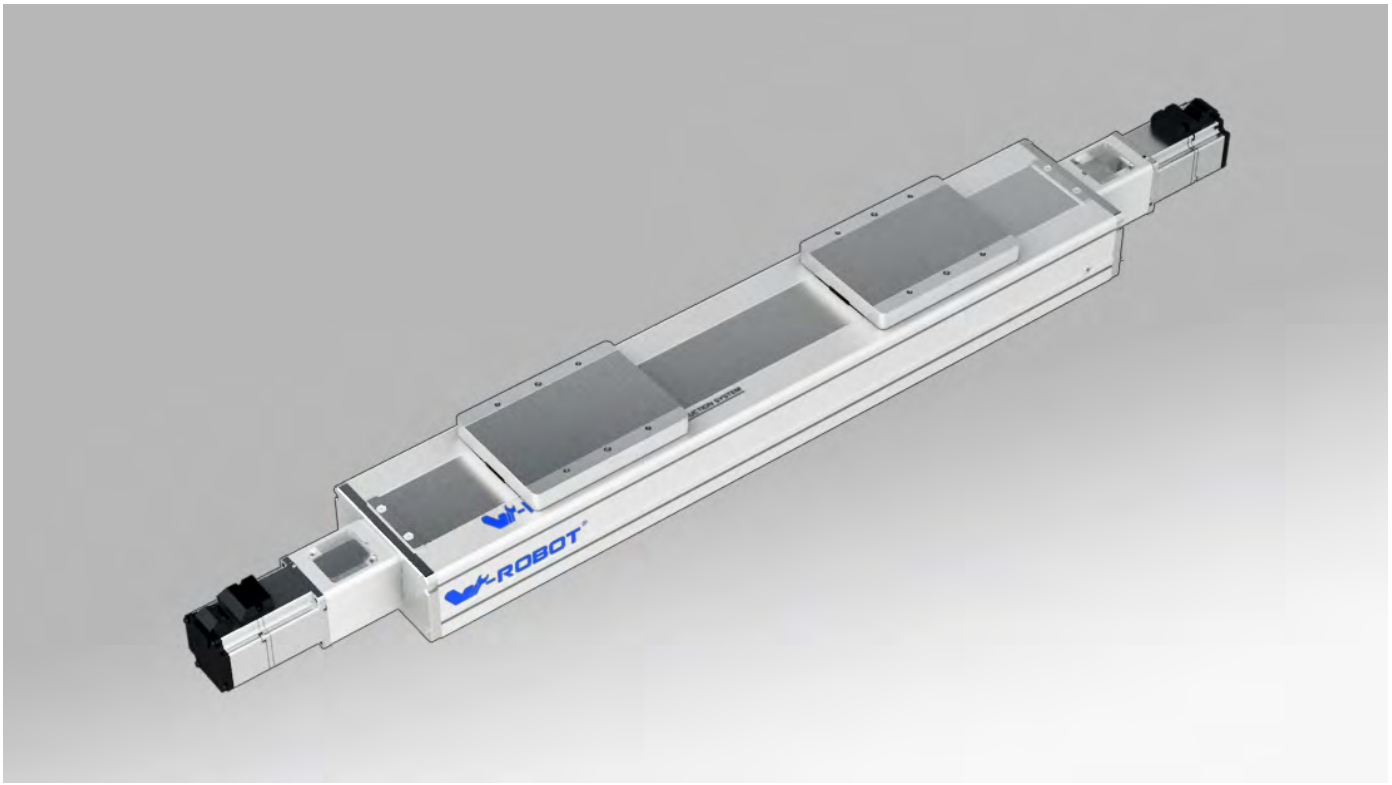

Motor direction

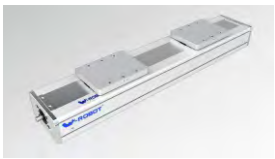

BA

BC

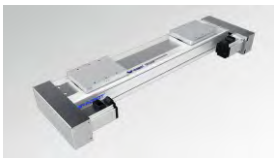

BLR

Guide for Model Selection

VC14D2 – L20 – P – S100 – BC – ZP40B – C4 – ____

Base Style	
V	Vseries
C	Cleanse Fully-enclosed
14	Body width140

Motor Qty	
D2	Dual motor moving vis-a-vis

Ball Screw Lead	
L5	5mm
L10	10mm
L20	20mm
L40	40mm

Accuracy class	
P	High precision
C	Common precision

Stroke(mm)
100-1500

Motor way	
BA	Basis
BC	External
BLR	Right/Left Side

Motor Type	
P	Panasonic
M	Mitsubishi
Y	Yaskawa
T	Delta
W	W-Robot

* For Z: Motor is from clients

Motor power	
40	400W
75	750W
Brakes	
No	No brake
B	With brake

Original Sensor position	
External	
C	Motor side
D	Oppsite motor side
E	No

Sensor switch	
External	
2	2pcs
6	6pcs
No sensor	

Sensor type	
No	NPN
P	PNP

Non-standard, d.c.,	
No	Standard type
BL1	Detailed information please see page 032
B2	
D01	
U01	
UD01	
H01	
HU01	
HD01	
HUD01	
M01	
S01	

VC14D2

W-ROBOT® Linear Drives

Specification

Motor power AC (W)		400W/750W			
BallScrewØ(mm)		(C7)	20		
		(C5)	20		
Repeatability (mm)		(C7)	±0.01		
		(C5)	±0.006		
BallScrew Lead(mm)		5	10	20	40
MaximumSpeed(mm/sec) 3000 Motor Speed(rpm/mim)		250	500	1000	2000
Maximum Payload(kg)	Horizontal	110/115	100/105	75/80	30/50
	Vertical	40/45	29/35	14/20	5/10
RatedThrust(N)		1388/2565	694/1281	347/640	347/640
Linear Guide (mm)		20x15.5 -2			
Coupling (mm) (Motor side) x (Ball Screw Side)		14x12		19x12	
Motor Output		400W		750W	
Home Sensor		Outside	EE-SX672(NPN) EE-SX672P(PNP)		
		Outside Guide	EE-SX674(NPN) EE-SX674P(PNP)		

Wiring drawing of inductor(original point and endpoint)

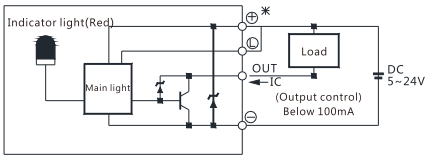

(Figure 1)

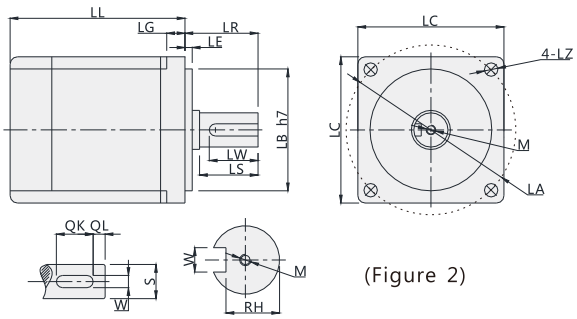

(Figure 2)

* Above repeatability is within strok 300mm,if logner travel needed,it willbe lower.In case stroke over 600 will lead to swing of ball screw,please slow down the speed 15%.Please note figure 2 motor size is same with table 1, or needed to replace coupler and motor holder.)

Servo Motor Matches List

(Table 1)

Servo motor size																			
Power(W)	Brand	Type		LL	LL(Brakes)	LA	LE	LZ	LC	LG	LW	RH	W	LR	S	LB	M	QK	QL
200W	Panasonic	MSMJ022G1□	V:With brake U:No brake	79.5	115.5	70	3	4.5	60	6.5	20	8.5	4h9	30	11h6	50h7	M4x8L	-	-
	Delta	ECMA-C20602□S	S:With brake R:No brake	105.5	141.5	70	3	5.5	60	7.5	20	11	5	30	14h6	50h7	M4x15L	-	-
	Mitsubishi	HC-KFS23□K	B:With brake □:No brake	99.5	131.5	70	3	5.8	62	7	-	-	-	30	14h6	50h7	-	-	-
400W	Panasonic	MSMJ042G1□	V:With brake U:No brake	99	135	70	3	4.5	60	6.5	20	11	5h9	30	14h6	50h7	M5x10L	-	-
	Delta	ECMA-C20604□S	S:With brake R:No brake	130.7	166.6	70	3	5.5	60	7.5	20	11	5	30	14h6	50h7	M4x15L	-	-
		ECMA-C20804□S	S:With brake R:No brake	112.3	152.8	90	3	6.6	80	8	20	11	5	35	14h6	70h7	M4x15L	-	-
	Mitsubishi	HC-KFS43□K	B:With brake □:No brake	124.5	165.5	70	3	5.8	62	7	-	-	-	30	14h6	50h7	-	-	-
750W	Panasonic	MSMJ082G1□	V:With brake U:No brake	122	149	90	3	6	80	8	25	15.5	6h9	35	19h6	70h7	M5x10L	-	-
	Delta	ECMA-C20807□S	S:With brake R:No brake	138.3	178	90	3	6.6	80	8	25	15.5	6	35	19h6	70h7	M6x20L	-	-
		ECMA-C20907□S	S:With brake R:No brake	130.2	161.3	100	3	6.6	86	8	20	13	5	35	16h6	80h7	M5x15L	-	-
	Mitsubishi	HC-KFS73□K	B:With brake □:No brake	142	177.5	90	3	6.6	82	8	-	-	-	40	19h6	70h7	-	-	-

□ Stand for empty

Max. Payload Diameters Table

(Unit : mm)

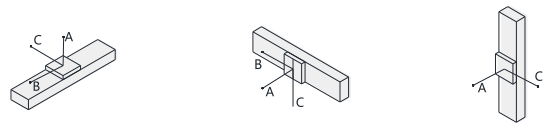

Horizontal installation		A	B	C
Lead 5	55kg	2235	327	433
	95kg	1500	156	249
	115kg	1385	152	202
Lead 10	55kg	1830	321	428
	70kg	1508	190	252
	90kg	1389	156	206
Lead 20	25kg	1989	675	746
	45kg	1332	395	445
	78kg	1047	238	201

Wall installation		A	B	C
Lead 5	55kg	378	263	1829
	95kg	208	124	1497
	115kg	163	89	1377
Lead 10	55kg	400	265	1831
	70kg	220	135	1508
	90kg	173	100	1389
Lead 20	25kg	737	612	1930
	45kg	427	332	1260
	78kg	253	174	944

Vertical installation		A	C
Lead 5	15kg	1133	915
	25kg	908	743
	45kg	745	722
Lead 10	10kg	1334	1334
	20kg	788	788
	35kg	563	563
Lead 20	1kg	1265	1265
	5kg	1114	1114
	20kg	489	489

Max. Static Torque Table

(Unit : N.m)

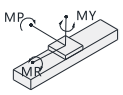

Maximum static torque	
MY	784
MP	788
MR	691

VC14D2

BA: Basis

Unit (mm)

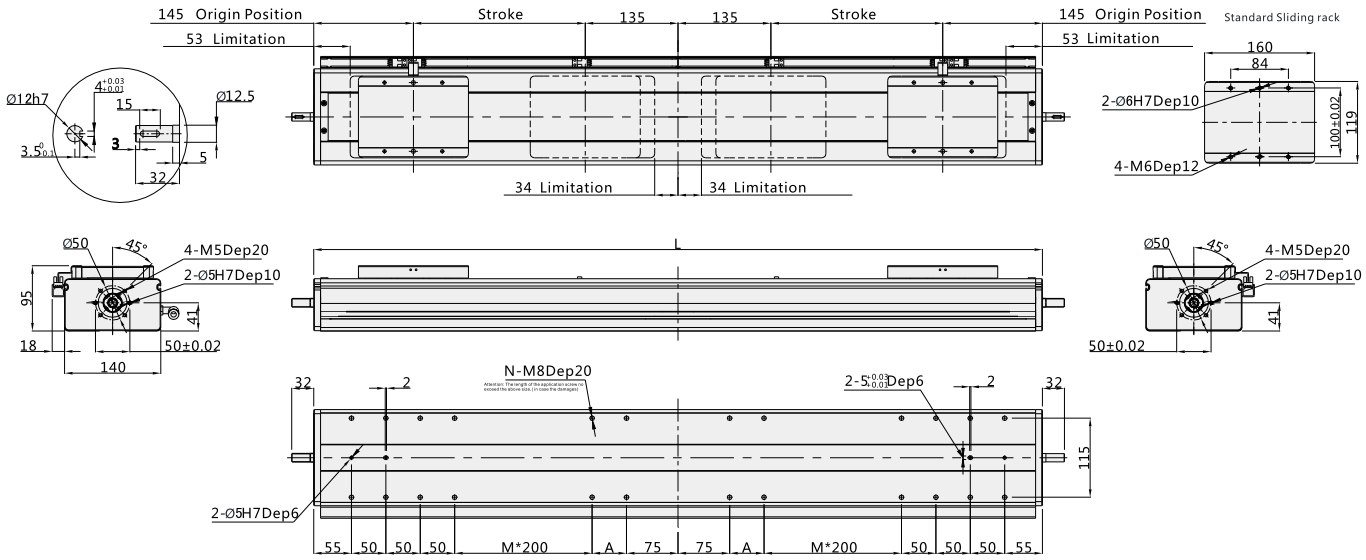

Note: Not including motor weight. *In case special stroke please contact technical services.

Working Stroke	100	150	200	250	300	350	400	450	500	550	600	650	700	750	800	850	900	950	1000	1050	1100	1150	1200	1250	1300	1350	1400	1450	1500
L	760	860	960	1060	1160	1260	1360	1460	1560	1660	1760	1860	1960	2060	2160	2260	2360	2460	2560	2660	2760	2860	2960	3060	3160	3260	3360	3460	3560
M	0	0	0	1	1	1	1	2	2	2	2	3	3	3	3	4	4	4	4	5	5	5	5	6	6	6	6	7	7
N	20	20	20	24	24	24	24	28	28	28	28	32	32	32	32	36	36	36	36	40	40	40	40	44	44	44	44	48	48
A	100	150	200	50	100	150	200	50	100	150	200	50	100	150	200	50	100	150	200	50	100	150	200	50	100	150	200	50	100
Weight KG	18.8	20.2	21.6	23.0	24.4	25.8	27.2	28.6	30.0	31.4	32.8	34.2	35.6	37.0	38.4	39.8	41.2	42.6	44.0	45.4	46.8	48.2	49.6	51.0	52.4	53.8	55.2	56.6	58.0

*Products with color ▭ are available stock and short lead time.

BC: External

Unit (mm)

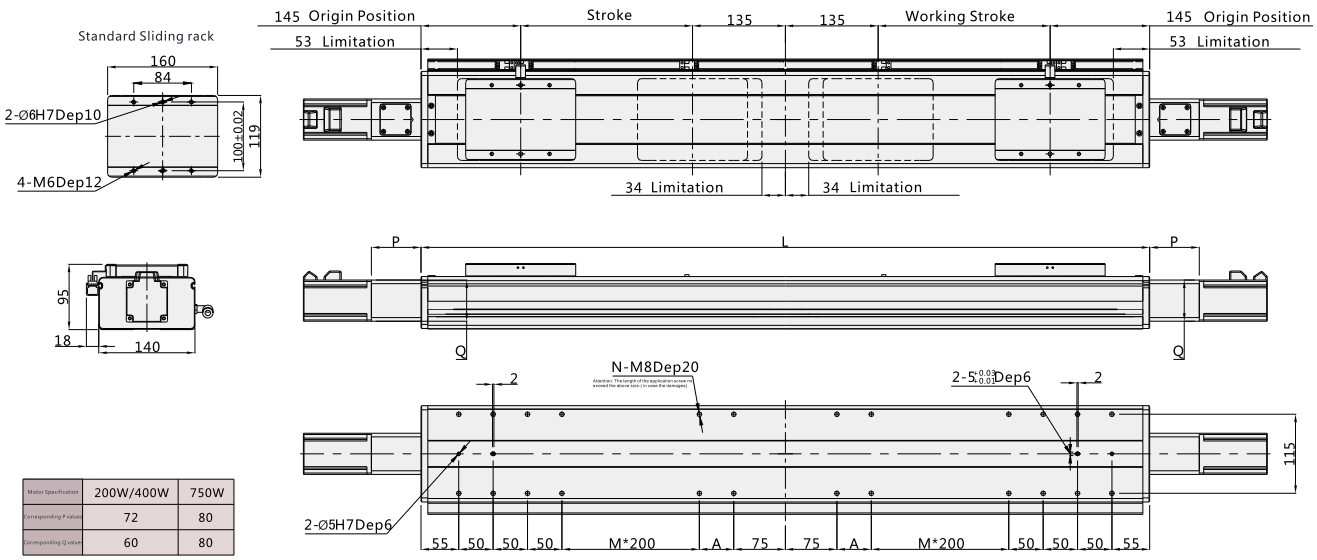

Motor Specification	200W/400W	750W
Corresponding P value	72	80
Corresponding Q value	60	80

Note: Not including motor weight. *In case special stroke please contact technical services.

Working Stroke	100	150	200	250	300	350	400	450	500	550	600	650	700	750	800	850	900	950	1000	1050	1100	1150	1200	1250	1300	1350	1400	1450	1500
L	760	860	960	1060	1160	1260	1360	1460	1560	1660	1760	1860	1960	2060	2160	2260	2360	2460	2560	2660	2760	2860	2960	3060	3160	3260	3360	3460	3560
M	0	0	0	1	1	1	1	2	2	2	2	3	3	3	3	4	4	4	4	5	5	5	5	6	6	6	6	7	7
N	20	20	20	24	24	24	24	28	28	28	28	32	32	32	32	36	36	36	36	40	40	40	40	44	44	44	44	48	48
A	100	150	200	50	100	150	200	50	100	150	200	50	100	150	200	50	100	150	200	50	100	150	200	50	100	150	200	50	100
Weight KG	20.2	21.6	23.0	24.4	25.8	27.2	28.6	30.0	31.4	32.8	34.2	35.8	37.0	38.4	39.8	41.2	42.6	44.0	45.4	46.8	48.2	49.6	51.0	52.4	53.8	55.2	56.6	58.0	59.4

*Products with color ▭ are available stock and short lead time.

VC14D2

W-ROBOT® Linear Drives

BLR: Left/Right Side

Unit (mm)

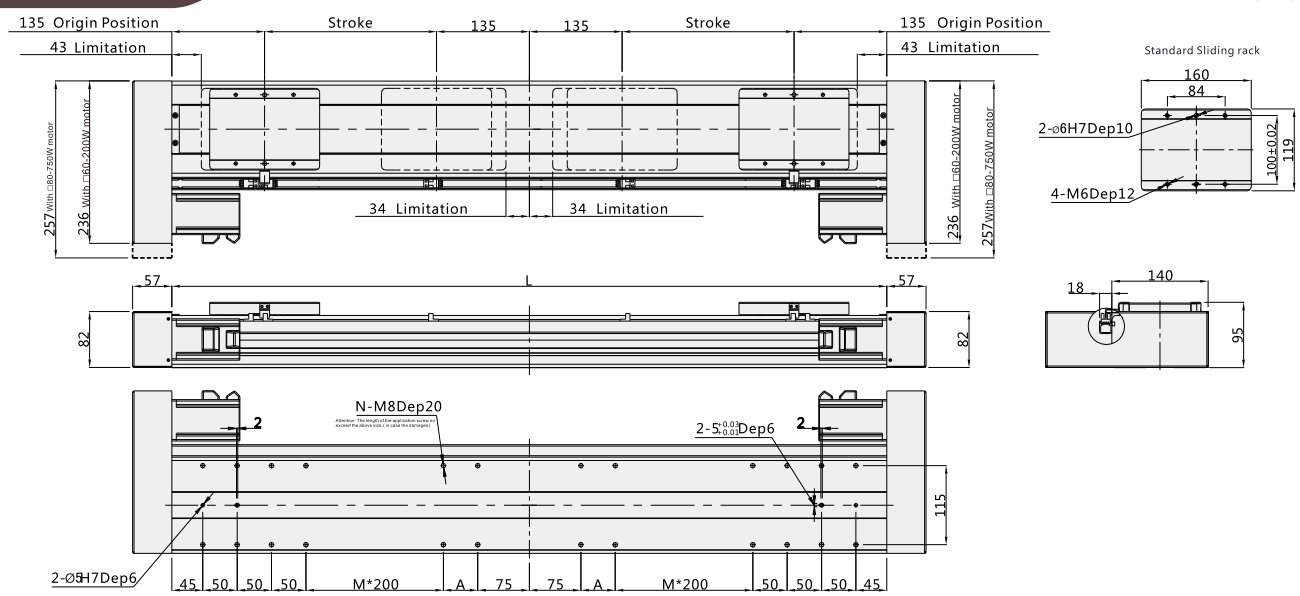

Note: Not including motor weight. *In case special stroke please contact technical services.

Working Stroke	100	150	200	250	300	350	400	450	500	550	600	650	700	750	800	850	900	950	1000	1050	1100	1150	1200	1250	1300	1350	1400	1450	1500
L	740	840	940	1040	1140	1240	1340	1440	1540	1640	1740	1840	1940	2040	2140	2240	2340	2440	2540	2640	2740	2840	2940	3040	3140	3240	3340	3440	3540
M	0	0	0	1	1	1	1	2	2	2	2	3	3	3	3	4	4	4	4	5	5	5	5	6	6	6	6	7	7
N	20	20	20	24	24	24	24	28	28	28	28	32	32	32	32	36	36	36	36	40	40	40	40	44	44	44	44	48	48
A	100	150	200	50	100	150	200	50	100	150	200	50	100	150	200	50	100	150	200	50	100	150	200	50	100	150	200	50	100
Weight KG	22.0	23.4	24.8	26.2	27.6	29.0	30.4	31.8	33.2	34.6	36.0	37.4	38.8	40.2	41.6	43.0	44.4	45.8	47.2	48.6	50.0	51.4	52.8	54.2	55.6	57.0	58.4	59.8	61.2

*Products with color ▭ are available stock and short lead time.

Gripping Type Single Axis Robot

VF8D1

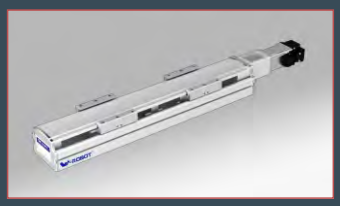

Maximum Stroke	1500mm
Maximum Payload	25KG ····· 207
Body Width	80mm

VF12D1

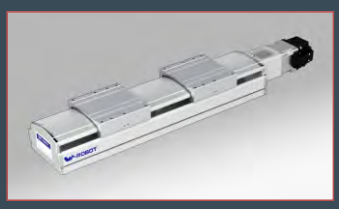

Maximum Stroke	1500mm
Maximum Payload	84KG ····· 211
Body Width	120mm

VF8D1 Gripping Type Single Axis Robot

W-ROBOT® Linear Drives

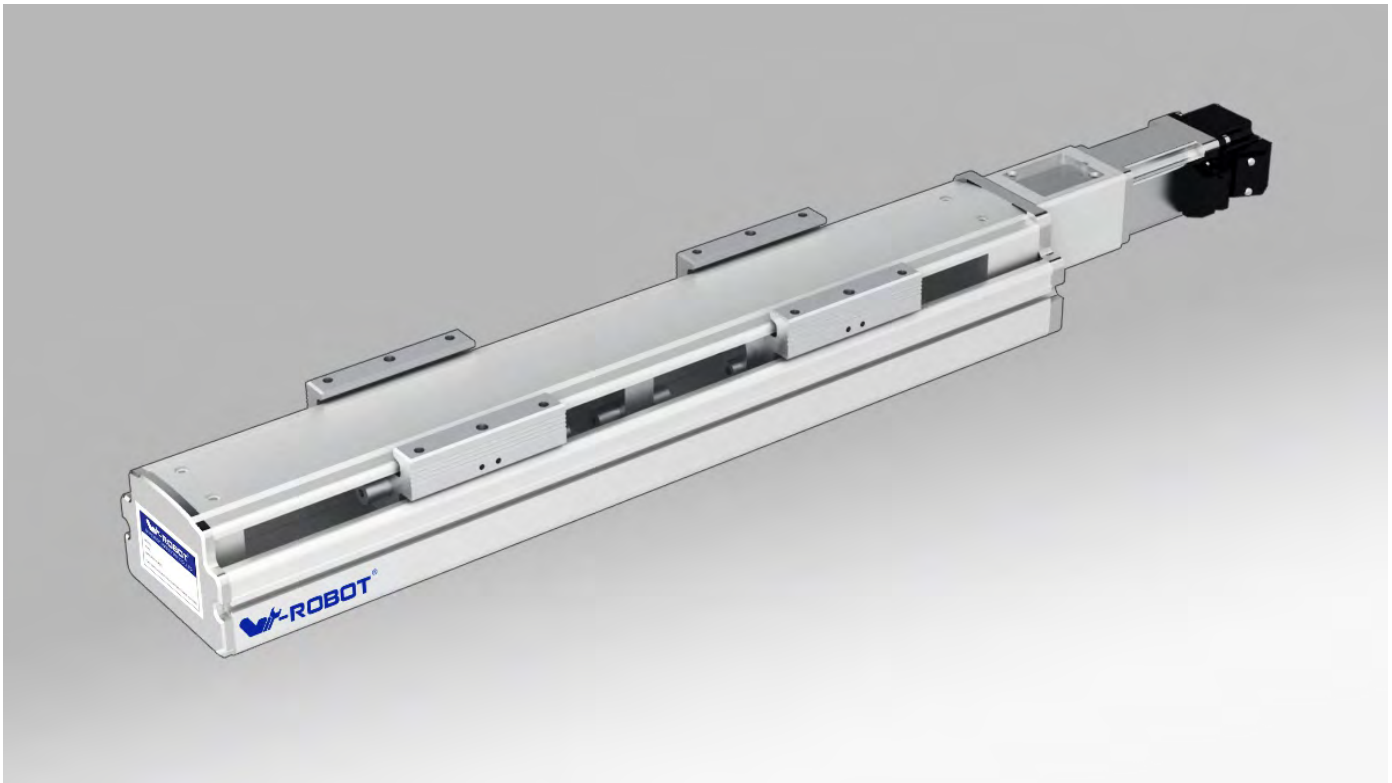

Motor direction

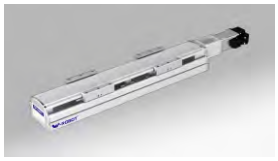

BC

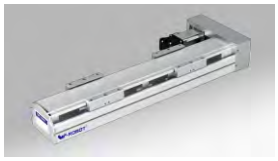

BL

BR

Guide for Model Selection

VF8D1 — L5 — C — S100 — BC — ZP40B

Base Style	
V	Vseries
F	Semiclosed with Frame Ball Screw Drive
8	Body width80

Motor Qty	
D1	Single motor run from opposite directions

Ball Screw Lead	
L5	5mm

Accuracy class	
P	High precision
C	Common precision

Stroke(mm)
100-1500

Motor way	
BA	Basis
BC	External
BR	Right Side
BL	Left Side

Motor Type	
P	Panasonic
M	Mitsubishi
Y	Yaskawa
T	Delta
W	W-Robot

*For Z: Motor is from clients

Motor power	
10	100W
40	400W

Brakes	
No	No brake
B	With brake

VF8D1 Gripping Type Single Axis Robot

Specification

Motor power AC (W)		100W/200W/400W			
BallScrewØ		(C7)	16		
		(C5)	16		
Repeatability		(C7)	±0.01		
		(C5)	±0.006		
BallScrew Lead(mm)		5	/	/	/
MaximumSpeed(mm/sec) 3000 Motor Speed(rpm/mim)		250	/	/	/
Maximum Payload(kg)	Horizontal	18/20/25	/	/	/
	Vertical	8/9/10	/	/	/
RatedThrust(N)		330/683/1388	/	/	/
Linear Guide (mm)		24x8.5 -1			
Coupling (mm) (Motor side) x (Ball Screw Side)		8x10	11x10	14x10	14x10
Motor Output		100W	200W		400W
Home Sensor		Outside EE-SX672(NPN) EE-SX672P(PNP)			
		Outside Guide EE-SX674(NPN) EE-SX674P(PNP)			

Wiring drawing of inductor(original point and endpoint)

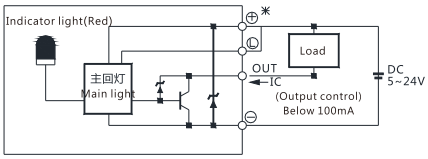

(Figure 1)

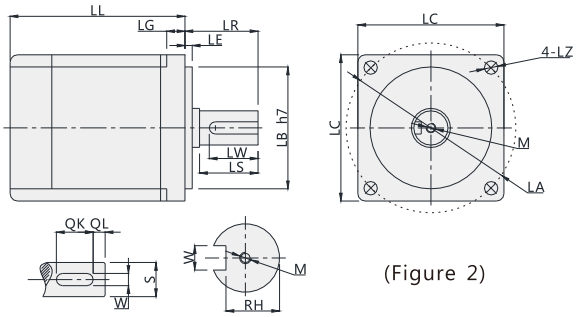

(Figure 2)

* Above repeatability is within strok 300mm,if logner travel needed,it willbe lower.In case stroke over 650 will lead to swing of ball screw,please slow down the speed 15%.Please note figure 2 motor size is same with table 1, or needed to replace coupler and motor holder.)

Servo Motor Matches List

(Table 1)

Servo motor size																			
Power(W)	Brand	Type		LL	LL(Brakes)	LA	LE	LZ	LC	LG	LW	RH	W	LR	S	LB	M	QK	QL
100W	Panasonic	MSMD012G1□	V:With brake U:No brake	92	122	45	3	3.4	38	6	14	6.2	3h9	25	8h6	30h7	M3x6L	-	-
	Delta	ECMA-C20401□S	S:With brake R:No brake	100.6	136.6	46	2.5	4.5	40	5	16	6.2	3	25	8h6	30h7	M3x8L	-	-
	Mitsubishi	HC-KFS12□K	B:With brake □:No brake	86.5	124.5	46	2.5	4.5	42	5	-	-	-	25	8h6	30h7	-	-	-
200W	Panasonic	MSMJ022G1□	V:With brake U:No brake	79.5	115.5	70	3	4.5	60	6.5	20	8.5	4h9	30	11h6	50h7	M4x8L	-	-
	Delta	ECMA-C20602□S	S:With brake R:No brake	105.5	141.5	70	3	5.5	60	7.5	20	11	5	30	14h6	50h7	M4x15L	-	-
	Mitsubishi	HC-KFS23□K	B:With brake □:No brake	99.5	131.5	70	3	5.8	62	7	-	-	-	30	14h6	50h7	-	-	-
400W	Panasonic	MSMJ042G1□	V:With brake U:No brake	99	135	70	3	4.5	60	6.5	20	11	5h9	30	14h6	50h7	M5x10L	-	-
	Delta	ECMA-C20604□S	S:With brake R:No brake	130.7	166.6	70	3	5.5	60	7.5	20	11	5	30	14h6	50h7	M4x15L	-	-
		ECMA-C20804□S	S:With brake R:No brake	112.3	152.8	90	3	6.6	80	8	20	11	5	35	14h6	70h7	M4x15L	-	-
	Mitsubishi	HC-KFS43□K	B:With brake □:No brake	124.5	165.5	70	3	5.8	62	7	-	-	-	30	14h6	50h7	-	-	-

□ Stand for empty

Max. Payload Diameters Table

(Unit : mm)

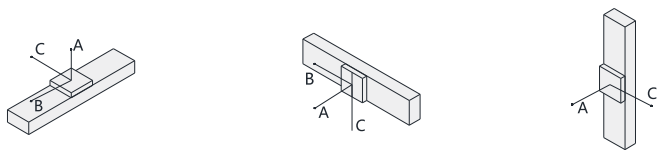

Horizontal installation		A	B	C
Lead 5	10kg	374	33	109
	18kg	159	0	25
	-	-	-	-
Lead 10	3kg	642	125	335
	8kg	273	41	121
	14kg	216	24	77

Wall installation		A	B	C
Lead 5	5kg	204	45	530
	10kg	72	0	245
	18kg	0	0	0
Lead 10	3kg	293	96	510
	8kg	89	14	210
	14kg	43	0	130

Vertical installation		A	C
Lead 5	2kg	171	172
	4kg	73	74
	8kg	23	26
Lead 10	1kg	335	352
	2kg	165	165
	5kg	70	72

Max. Static Torque Table

(Unit : N.m)

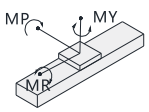

Maximum static torque	
MY	70
MP	80
MR	75

VF8D1 Gripping Type Single Axis Robot

W-ROBOT® Linear Drives

BC: External

Unit (mm)

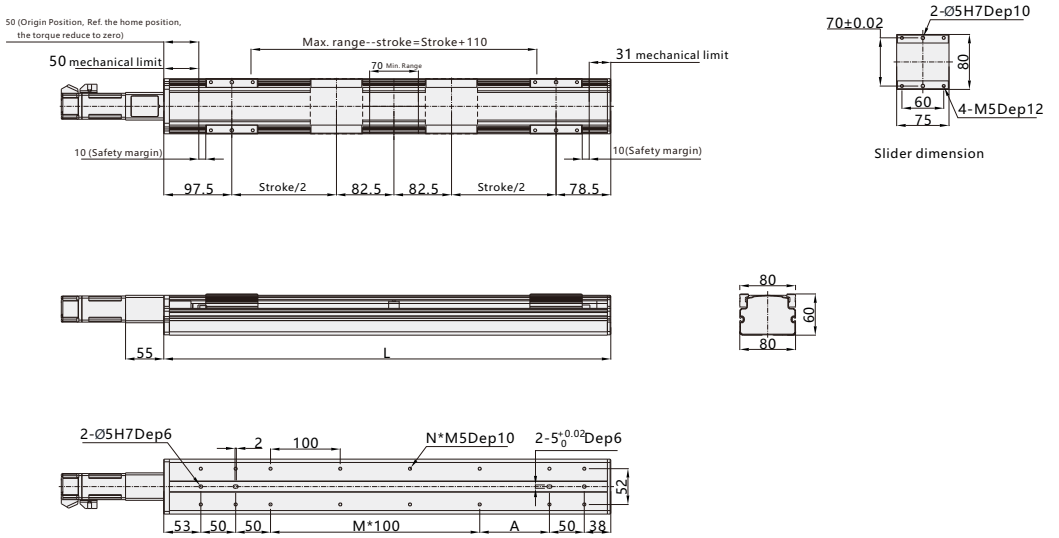

Note: Not including motor weight. *In case special stroke please contact technical services.

Working Stroke	100	150	200	250	300	350	400	450	500	550	600	650	700	750	800	850	900	950	1000
L	441	491	541	591	641	691	741	791	841	891	941	991	1041	1091	1141	1191	1241	1291	1341
M	1	2	2	3	3	4	4	5	5	6	6	7	7	8	8	9	9	10	10
N	12	14	14	16	16	18	18	20	20	22	22	24	24	26	26	28	28	30	30
A	100	50	100	50	100	50	100	50	100	50	100	50	100	50	100	50	100	50	100
Weight KG	4.5	4.9	5.3	5.7	6.1	6.5	6.9	7.3	7.7	8.1	8.5	8.9	9.3	9.7	10.1	10.5	10.9	11.3	11.7

*Products with color ▭ are available stock and short lead time.

BL: Left Side

Unit (mm)

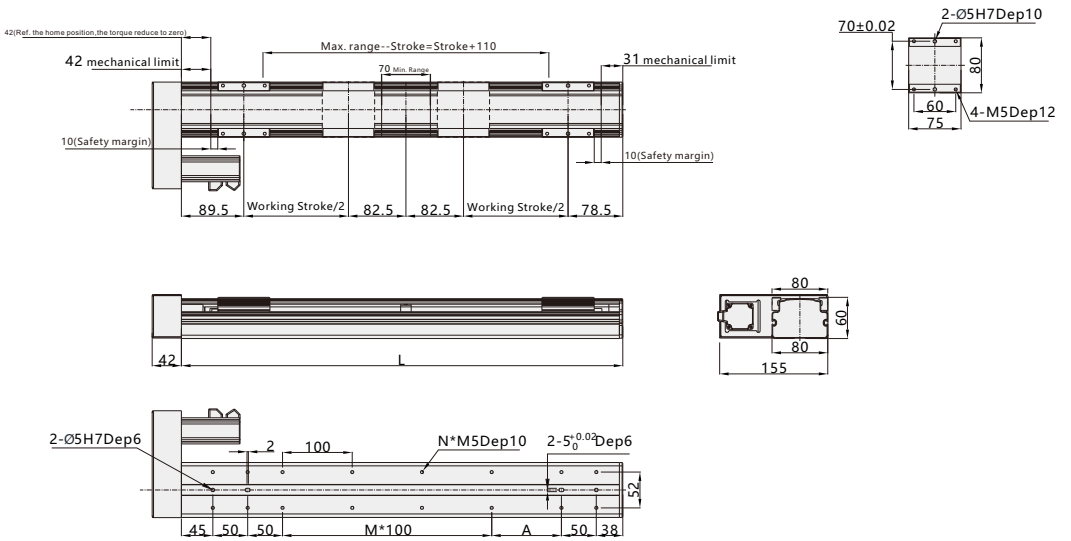

Note: Not including motor weight. *In case special stroke please contact technical services.

Working Stroke	100	150	200	250	300	350	400	450	500	550	600	650	700	750	800	850	900	950	1000
L	433	483	533	583	633	683	733	783	833	883	933	983	1033	1083	1133	1183	1233	1283	1333
M	1	2	2	3	3	4	4	5	5	6	6	7	7	8	8	9	9	10	10
N	12	14	14	16	16	18	18	20	20	22	22	24	24	26	26	28	28	30	30
A	100	50	100	50	100	50	100	50	100	50	100	50	100	50	100	50	100	50	100
Weight KG	4.6	5.0	5.4	5.8	6.2	6.6	7.0	7.4	7.8	8.2	8.6	9.0	9.4	9.8	10.2	10.6	11.0	11.4	11.8

*Products with color ▭ are available stock and short lead time.

*Products with color ▭ are available stock and short lead time.

BR: Right Side

(mm)

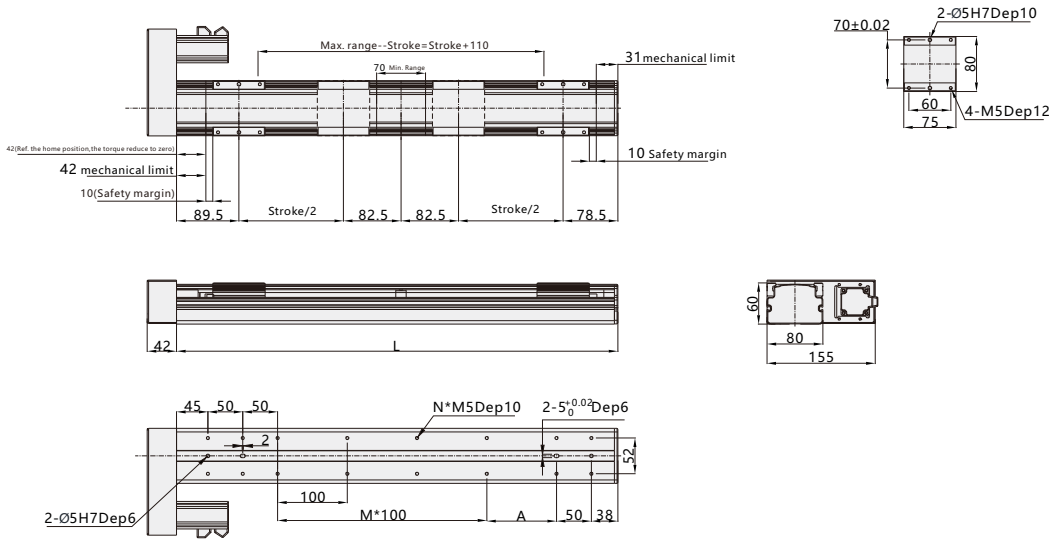

Note: Not including motor weight. *In case special stroke please contact technical services.

Working Stroke	100	150	200	250	300	350	400	450	500	550	600	650	700	750	800	850	900	950	1000
L	433	483	533	583	633	683	733	783	833	883	933	983	1033	1083	1133	1183	1233	1283	1333
M	1	2	2	3	3	4	4	5	5	6	6	7	7	8	8	9	9	10	10
N	12	14	14	16	16	18	18	20	20	22	22	24	24	26	26	28	28	30	30
A	100	50	100	50	100	50	100	50	100	50	100	50	100	50	100	50	100	50	100
Weight KG	4.6	5.0	5.4	5.8	6.2	6.6	7.0	7.4	7.8	8.2	8.6	9.0	9.4	9.8	10.2	10.6	11.0	11.4	11.8

*Products with color are available stock and short lead time.

*Products with color are available stock and short lead time.

VF12D1 Gripping Type Single Axis Robot

W-ROBOT® Linear Drives

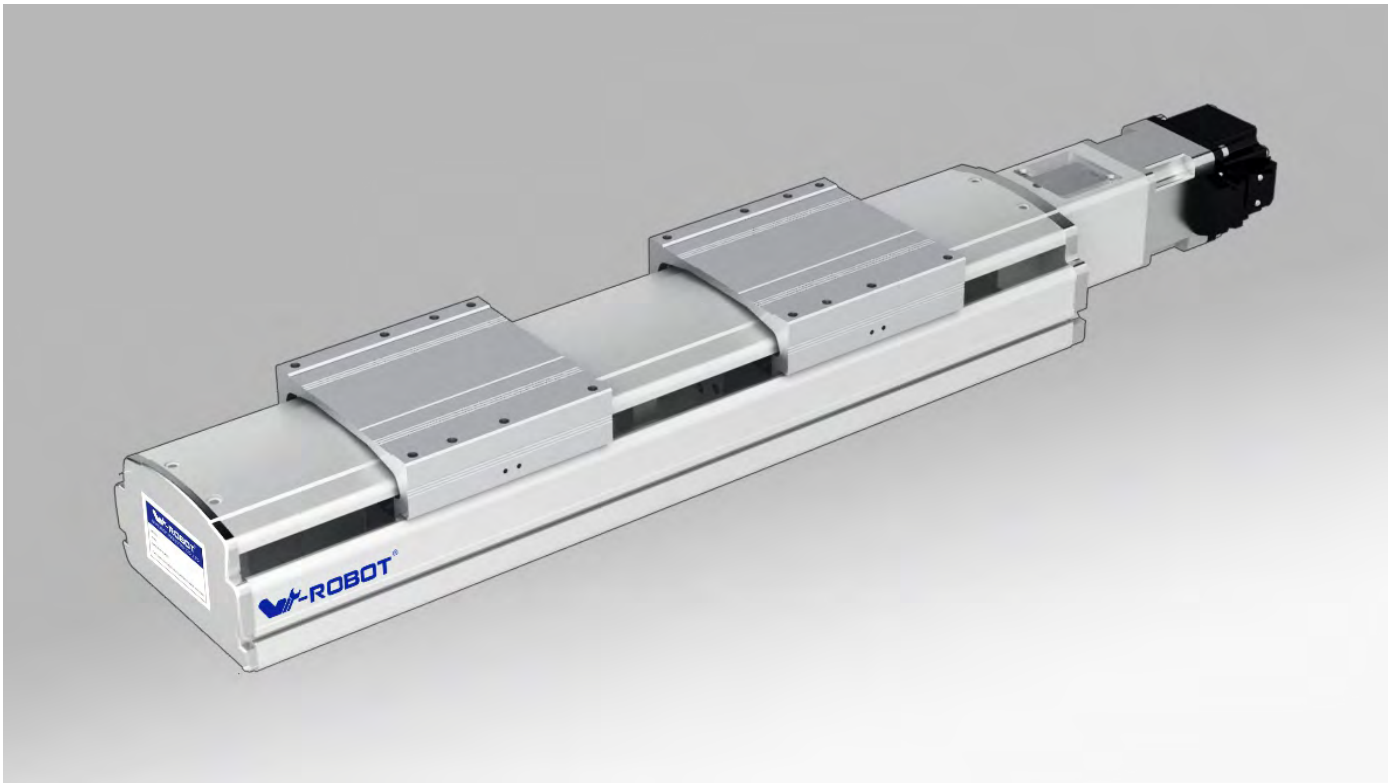

Motor direction

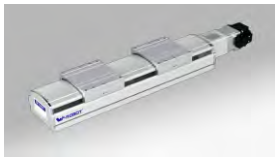

BC

BL

BR

Guide for Model Selection

VF12 D1 — L5 — C — S100 — BC — ZP40

Base Style	
V	Vseries
F	Semiclosed with Frame Ball Screw Drive
12	Body width120

Motor Qty	
D1	Single motor run from opposite directions

Ball Screw Lead	
L5	5mm

Accuracy class	
P	High precision
C	Common precision

Stroke(mm)
100-1500

Motor way	
BA	Basis
BC	External
BR	Right Side
BL	Left Side

Motor Type	
P	Panasonic
M	Mitsubishi
Y	Yaskawa
T	Delta
W	W-Robot

*For Z: Motor is from clients

Motor power	
10	100W
40	400W

Brakes	
No	No brake
B	With brake

VF12D1 Gripping Type Single Axis Robot

Specification

Motor power AC (W)		200W/400W			
BallScrewØ (mm)		(C7)	16		
		(C5)	16		
Repeatability(mm)		(C7)	±0.01		
		(C5)	±0.006		
BallScrew Lead(mm)		5	/	/	/
MaximumSpeed(mm/sec) 3000 Motor Speed(rpm/mim)		250	/	/	/
Maximum Payload(kg)	Horizontal	70/84	/	/	/
	Vertical	17/20	/	/	/
RatedThrust(N)		683/1388	/	/	/
Linear Guide (mm)		15x12.5 -2			
Coupling (mm) (Motor side) x (Ball Screw Side)		11x10	14x10	14x10	
Motor Output		200W		400W	
Home Sensor		Outside EE-SX672(NPN) EE-SX672P(PNP)			
		Outside Guide EE-SX674(NPN) EE-SX674P(PNP)			

Wiring drawing of inductor(original point and endpoint)

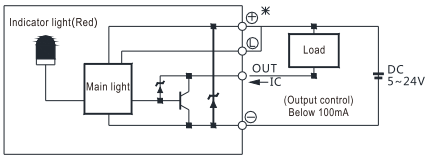

(Figure 1)

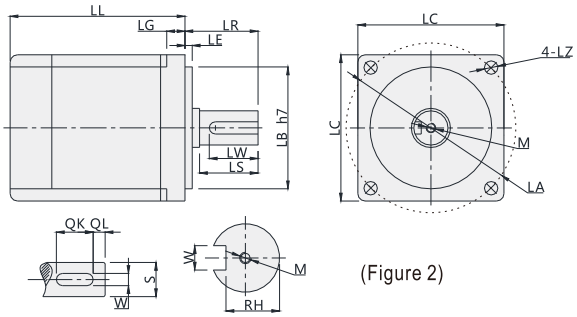

(Figure 2)

* Above repeatability is within strok 300mm,if logner travel needed,it willbe lower.In case stroke over 600 will lead to swing of ball screw,please slow down the speed 15%.Please note figure 2 motor size is same with table 1, or needed to replace coupler and motor holder.)

Servo Motor Matches List

(Table 1)

Servo motor size																			
Power(W)	Brand	Type		LL	LL(Brakes)	LA	LE	LZ	LC	LG	LW	RH	W	LR	S	LB	M	QK	QL
200W	Panasonic	MSMJ022G1□	V:With brake U:No brake	79.5	115.5	70	3	4.5	60	6.5	20	8.5	4h9	30	11h6	50h7	M4x8L	-	-
	Delta	ECMA-C20602□S	S:With brake R:No brake	105.5	141.5	70	3	5.5	60	7.5	20	11	5	30	14h6	50h7	M4x15L	-	-
	Mitsubishi	HC-KFS23□K	B:With brake □:No brake	99.5	131.5	70	3	5.8	62	7	-	-	-	30	14h6	50h7	-	-	-
400W	Panasonic	MSMJ042G1□	V:With brake U:No brake	99	135	70	3	4.5	60	6.5	20	11	5h9	30	14h6	50h7	M5x10L	-	-
	Delta	ECMA-C20604□S	S:With brake R:No brake	130.7	166.6	70	3	5.5	60	7.5	20	11	5	30	14h6	50h7	M4x15L	-	-
		ECMA-C20804□S	S:With brake R:No brake	112.3	152.8	90	3	6.6	80	8	20	11	5	35	14h6	70h7	M4x15L	-	-
	Mitsubishi	HC-KFS43□K	B:With brake □:No brake	124.5	165.5	70	3	5.8	62	7	-	-	-	30	14h6	50h7	-	-	-
750W	Panasonic	MSMJ082G1□	V:With brake U:No brake	122	149	90	3	6	80	8	25	15.5	6h9	35	19h6	70h7	M5x10L	-	-
	Delta	ECMA-C20807□S	S:With brake R:No brake	138.3	178	90	3	6.6	80	8	25	15.5	6	35	19h6	70h7	M6x20L	-	-
		ECMA-C20907□S	S:With brake R:No brake	130.2	161.3	100	3	6.6	86	8	20	13	5	35	16h6	80h7	M5x15L	-	-
	Mitsubishi	HC-KFS73□K	B:With brake □:No brake	142	177.5	90	3	6.6	82	8	-	-	-	40	19h6	70h7	-	-	-

□ Stand for empty

Max. Payload Diameters Table

(Unit : mm)

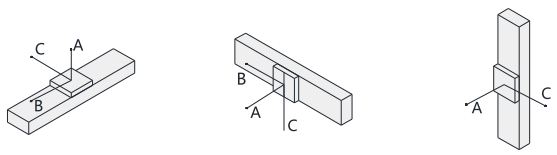

Horizontal installation		A	B	C
Lead 5	40kg	2448	316	322
	55kg	2197	247	257
	70kg	2005	207	219
Lead 10	25kg	1958	370	490
	35kg	1660	370	330
	47kg	1725	247	243
Lead 16	10kg	1800	1400	311
	20kg	1100	1100	139
	30kg	1047	445	324

Wall installation		A	B	C
Lead 5	40kg	204	112	1394
	55kg	130	57	1115
	70kg	85	24	895
Lead 10	25kg	414	333	1277
	35kg	235	157	929
	47kg	129	57	751
Lead 16	10kg	461	372	1410
	20kg	264	178	1027
	30kg	148	69	832

Vertical installation		A	C
Lead 5	5kg	762	614
	10kg	607	489
	12kg	498	493
Lead 10	4kg	1365	1101
	6kg	901	727
	8kg	674	543
Lead 16	1kg	1087	1217
	2kg	997	805
	6kg	747	603

Max. Static Torque Table

(Unit : N.m)

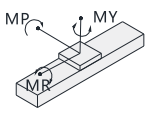

Maximum static torque	
MY	174
MP	175
MR	153

BC: External

Unit (mm)

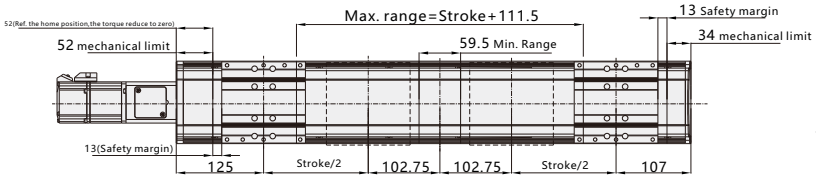

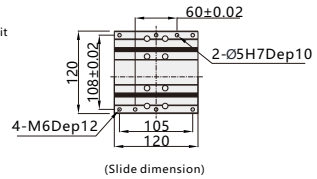

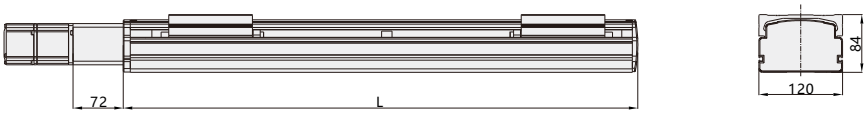

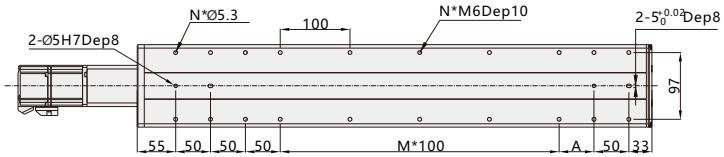

Note: Not including motor weight. *In case special stroke please contact technical services.

Working Stroke	100	150	200	250	300	350	400	450	500	550	600	650	700	750	800	850	900	950	1000
L	538	588	638	688	738	788	838	888	938	988	1038	1088	1138	1188	1238	1288	1338	1388	1438
M	2	2	3	3	4	4	5	5	6	6	7	7	8	8	9	9	10	10	11
N	16	16	18	18	20	20	22	22	24	24	26	26	28	28	30	30	32	32	34
A	50	100	50	100	50	100	50	100	50	100	50	100	50	100	50	100	50	100	50
Weight KG	8.6	9.1	9.6	10.1	10.6	11.1	11.6	12.1	12.6	13.1	13.6	14.1	14.6	15.1	15.6	16.1	16.6	17.1	17.6

*Products with color are available stock and short lead time.

BL: Left Side

Unit (mm)

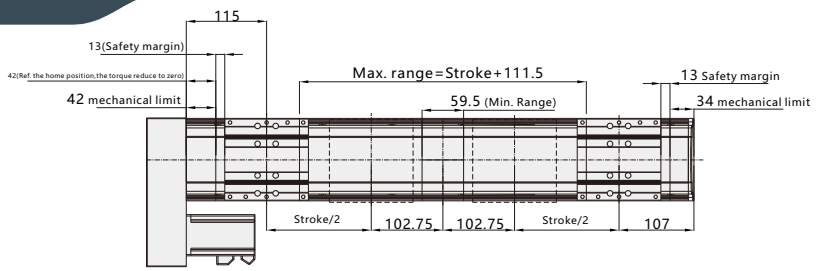

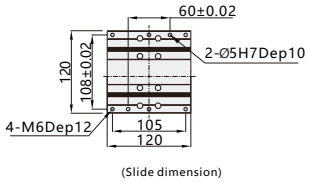

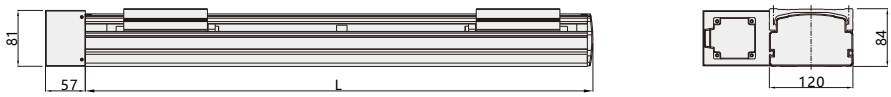

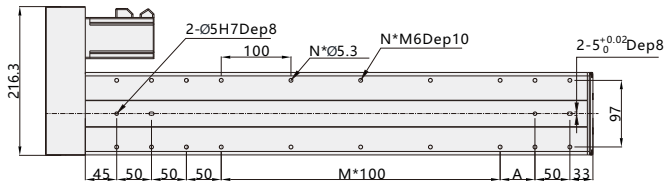

Note: Not including motor weight. *In case special stroke please contact technical services.

Working Stroke	100	150	200	250	300	350	400	450	500	550	600	650	700	750	800	850	900	950	1000
L	528	578	628	678	728	778	828	878	928	978	1028	1078	1128	1178	1228	1278	1328	1378	1428
M	2	2	3	3	4	4	5	5	6	6	7	7	8	8	9	9	10	10	11
N	16	16	18	18	20	20	22	22	24	24	26	26	28	28	30	30	32	32	34
A	50	100	50	100	50	100	50	100	50	100	50	100	50	100	50	100	50	100	50
Weight KG	9.0	9.5	10.0	10.5	11.0	11.5	12.0	12.5	13.0	13.5	14.0	14.5	15.0	15.5	16.0	16.5	17.0	17.5	18.0

*Products with color are available stock and short lead time.

*Products with color are available stock and short lead time.

VF12D1 Gripping Type Single Axis Robot

BR: Right Side

Unit (mm)

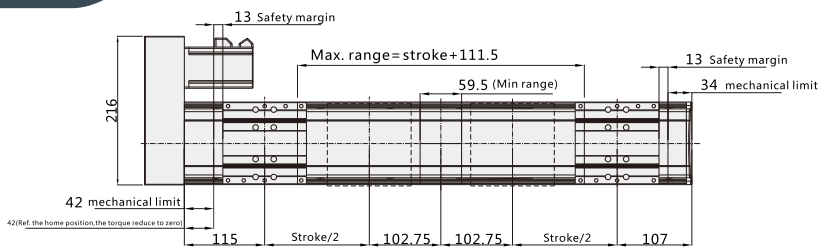

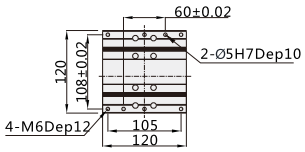

(Slider dimension)

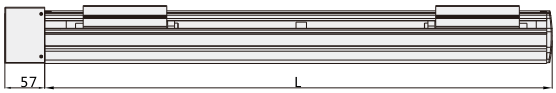

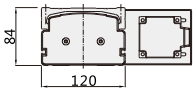

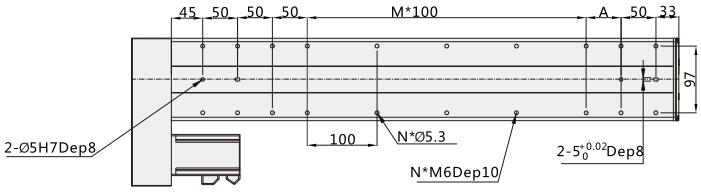

Note: Not including motor weight. *In case special stroke please contact technical services.

Working Stroke	100	150	200	250	300	350	400	450	500	550	600	650	700	750	800	850	900	950	1000
L	528	578	628	678	728	778	828	878	928	978	1028	1078	1128	1178	1228	1278	1328	1378	1428
M	2	2	3	3	4	4	5	5	6	6	7	7	8	8	9	9	10	10	11
N	16	16	18	18	20	20	22	22	24	24	26	26	28	28	30	30	32	32	34
A	50	100	50	100	50	100	50	100	50	100	50	100	50	100	50	100	50	100	50
Weight KG	9.0	9.5	10.0	10.5	11.0	11.5	12.0	12.5	13.0	13.5	14.0	14.5	15.0	15.5	16.0	16.5	17.0	17.5	18.0

*Products with color ▭ are available stock and short lead time.

*Products with color ▭ are available stock and short lead time.

V-ROBOT®

Linear Drives

Distributors for Australia & New Zealand

MOTION TECHNOLOGIES PTY LTD

24/22-30 Northumberland Road
Caringbah NSW 2229 Australia
Phone: (02) 9524 4782

sales@motiontech.com.au
www.motiontech.com.au

© 16/11/2020