V-ROBOT®
Linear Drives

www.motiontech.com.au

Miniature

LES16

Max Stroke (mm)	100	
Max Payload (KG)	6	247
Repeatability (mm)	±0.04	

LES25

Max Stroke (mm)	150	
Max Payload (KG)	9	250
Repeatability (mm)	±0.04	

LES16

Mini Module

BC

BL

BR

Guide for Model Selection

LES16 — L5 — S100 — BC — Q —

Base Style
Mini Module

Ball Screw Lead	
L5	5mm
L10	10mm

Stroke(mm)	
S50	50
S100	100

Motor way	
BC	External
BR	Right Side
BL	Left Side

Controller drive	
Q	Programmable
QS	Programmable +Modbus

Cable length	
None	Without Cable
1	1m
3	3m
5	5m

Speed-Payload

Horizontally

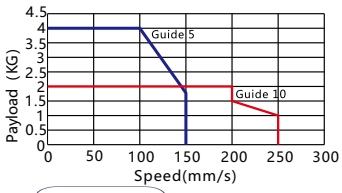

Vertically

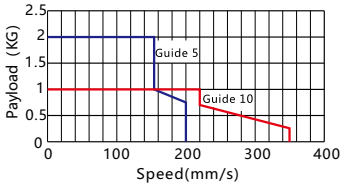

Specification

Motor		□28 step servo motor	
Resolution ratio		4096	
Repeatability		±0.04	
Drive		Screw	
BallScrew Lead(mm)		5	10
MaximumSpeed(mm/sec)		200	500
Maximum Payload(kg)	Horizontal	6	4
	Vertical	2	1
RatedThrust(N)		30	55
Guidance		Precision guide rail	

Max. static torque

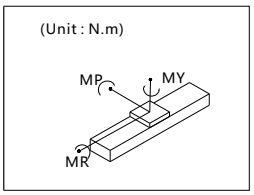

Max. static torque			
Stroke	MY	MP	MR
50	26	26	48
100	43	43	

Installation

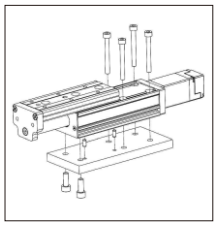

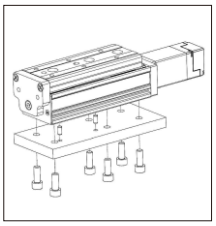

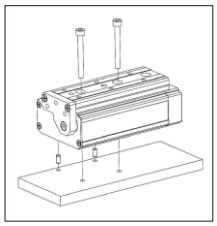

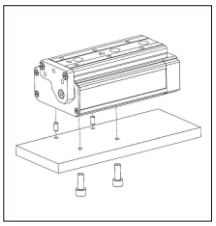

BC: External

Unit (mm)

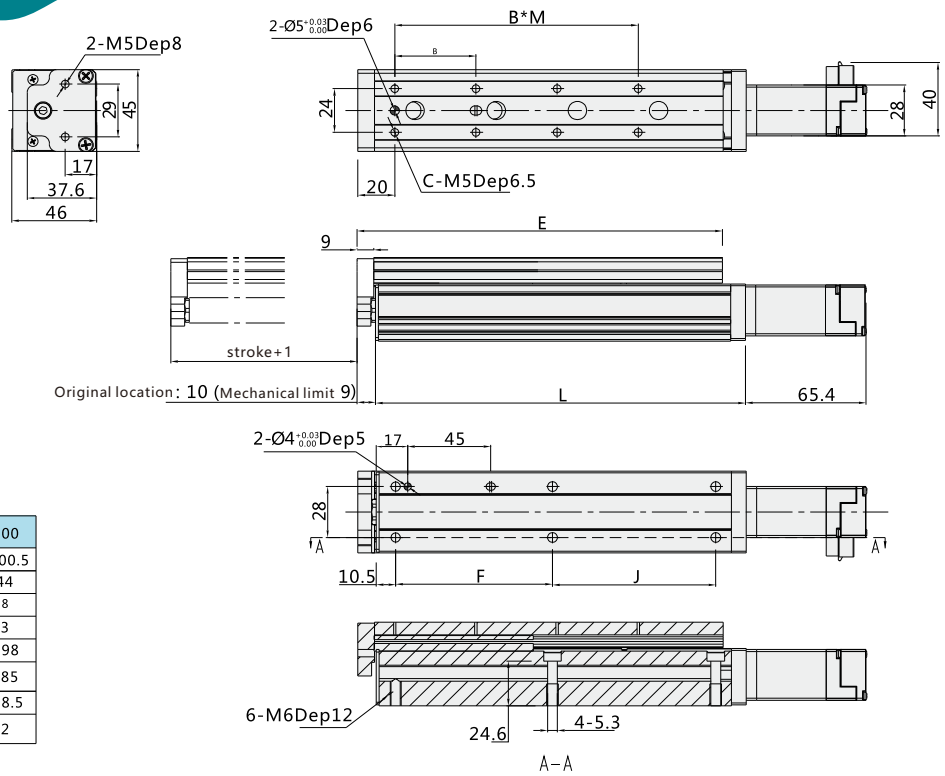

Working Stroke	50	100
L	131.5	200.5
B	40	44
C	6	8
M	2	3
E	123	198
F	65	85
J	39.5	88.5
Weight KG	1.5	2

BL: Left Side

Unit (mm)

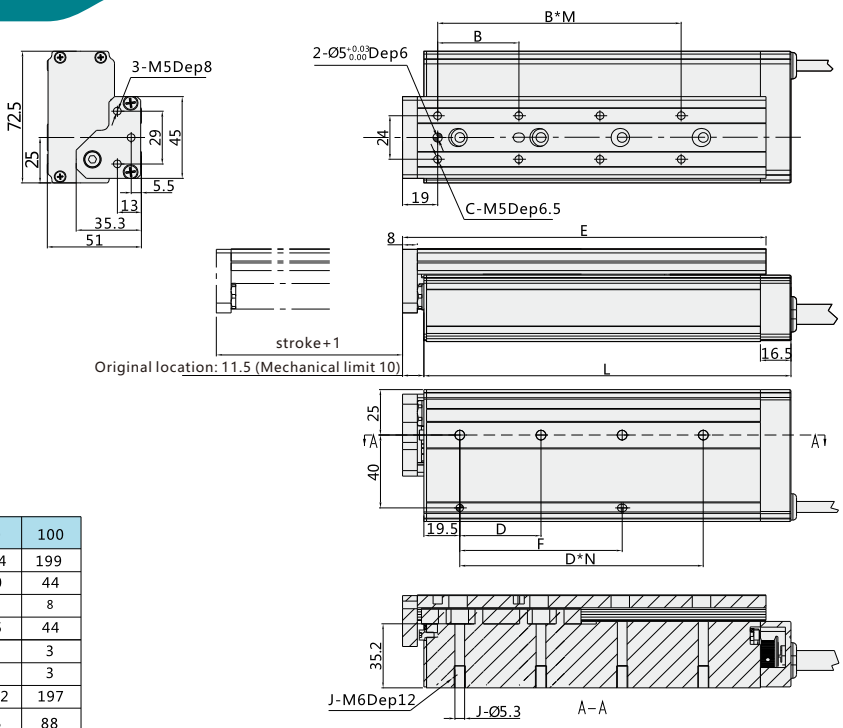

Working Stroke	50	100
L	124	199
B	40	44
C	6	8
D	45	44
M	2	3
N	1	3
E	122	197
F	45	88
J	2	4
Weight KG	1.4	1.9

BR: Right Side

Unit (mm)

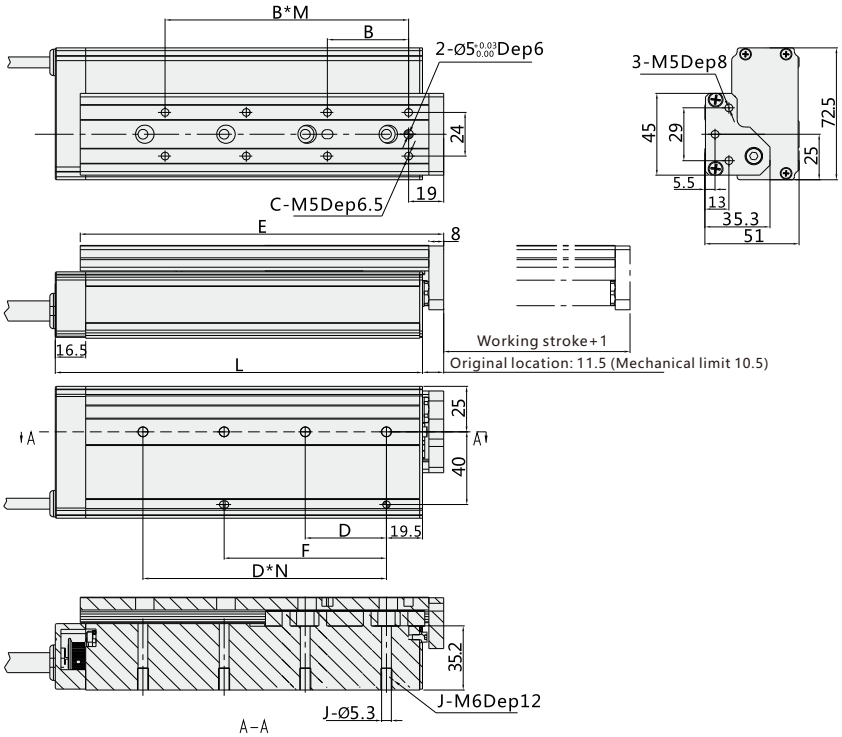

Working Stroke	50	100
L	124	199
B	40	44
C	6	8
D	45	44
M	2	3
N	1	3
E	122	197
F	45	88
J	2	4
Weight KG	1.4	1.9

LES25 Mini Module

W-ROBOT® Linear Drives

BC

BL

BR

Guide for Model Selection

LES25 — L8 — S100 — BC — Q —

Base Style
Mini Module

Ball Screw Lead	
L8	5mm
L16	10mm

Stroke(mm)	
S50	50
S100	100
S150	150

Motor way	
BC	External
BR	Right Side
BL	Left Side

Q	Programmable
QS	Programmable+Modbus

Cable length	
None	Without Cable
1	1m
3	3m
5	5m

Speed-Payload

Horizontally

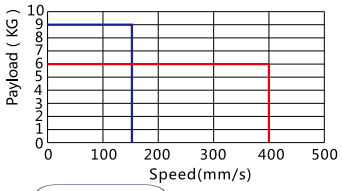

Vertically

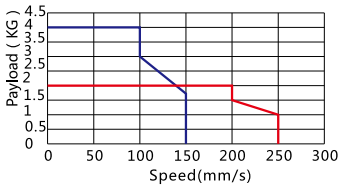

Specification

Motor		□42 step servo motor	
Resolution ratio		4096	
Repeatability		±0.04	
Drive		Ball screw	
BallScrew Lead(mm)		8	16
MaximumSpeed(mm/sec)		150	400
Maximum Payload(kg)	Horizontal	9	6
	Vertical	4	2
RatedThrust(N)		180	100
Guidance		Precision guide rail	

Max. static torque

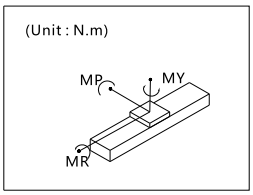

Max. static torque			
Stroke	MY	MP	MR
50	77	77	146
100	112	112	177
150	155	155	152

Installation

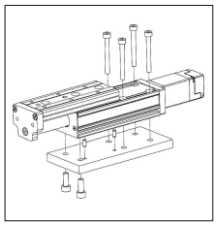

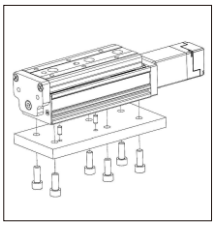

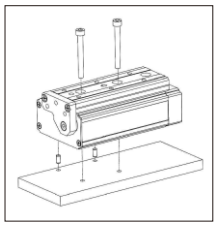

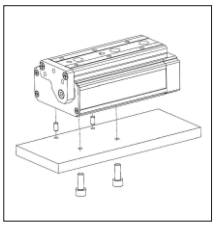

BC: External

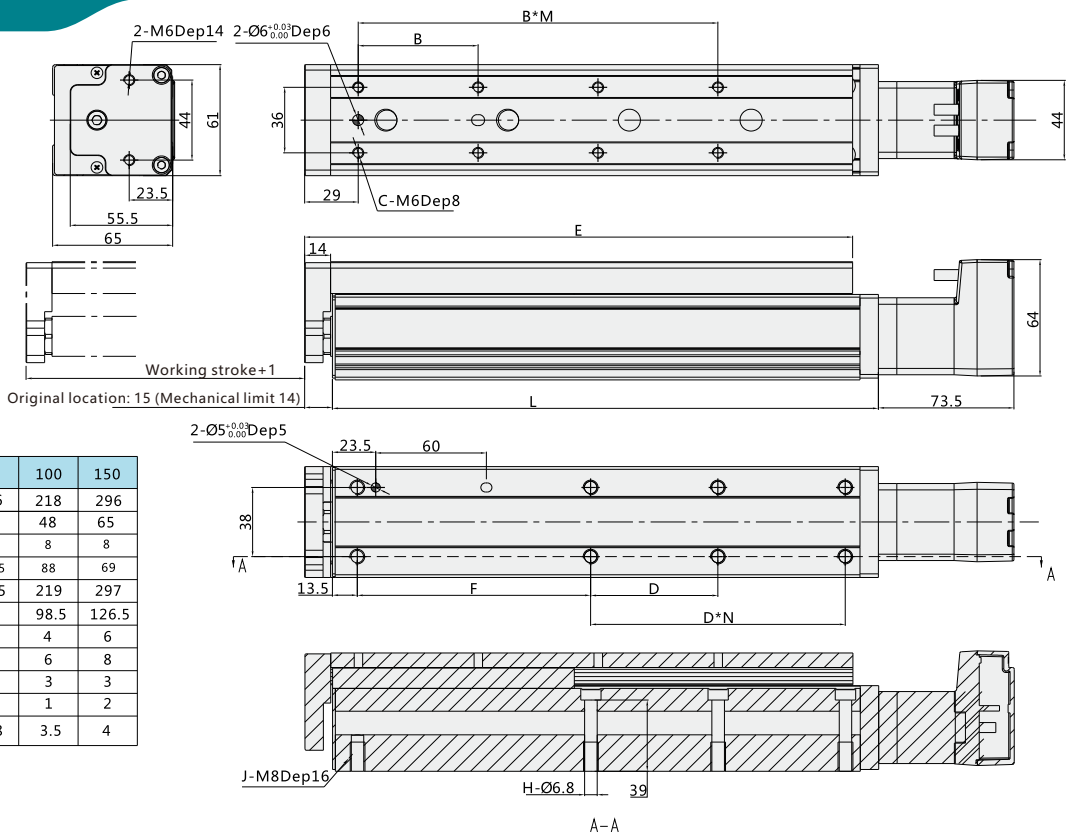

Working Stroke	50	100	150
L	156	218	296
B	75	48	65
C	4	8	8
D	40.5	88	69
E	155	219	297
F	84	98.5	126.5
H	4	4	6
J	6	6	8
M	1	3	3
N	1	1	2
Weight KG	2.8	3.5	4

BL: Left Side

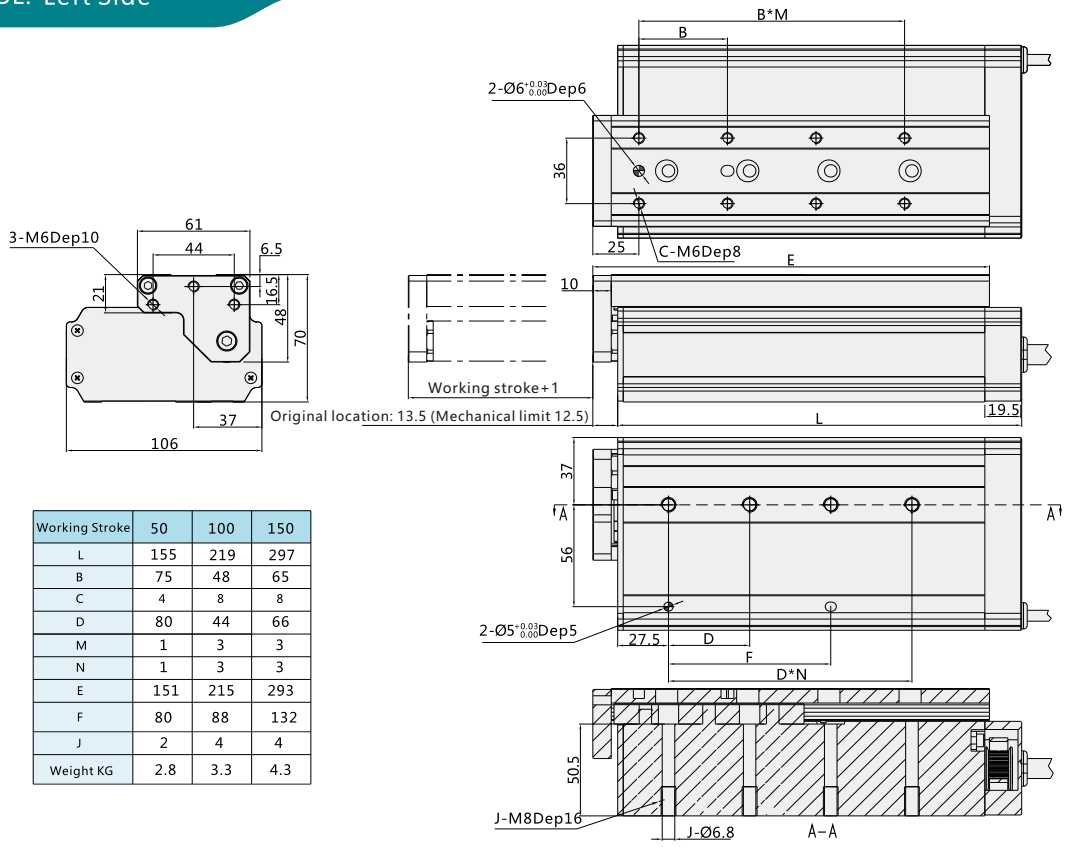

Working Stroke	50	100	150
L	155	219	297
B	75	48	65
C	4	8	8
D	80	44	66
M	1	3	3
N	1	3	3
E	151	215	293
F	80	88	132
J	2	4	4
Weight KG	2.8	3.3	4.3

BR: Right Side

Unit (mm)

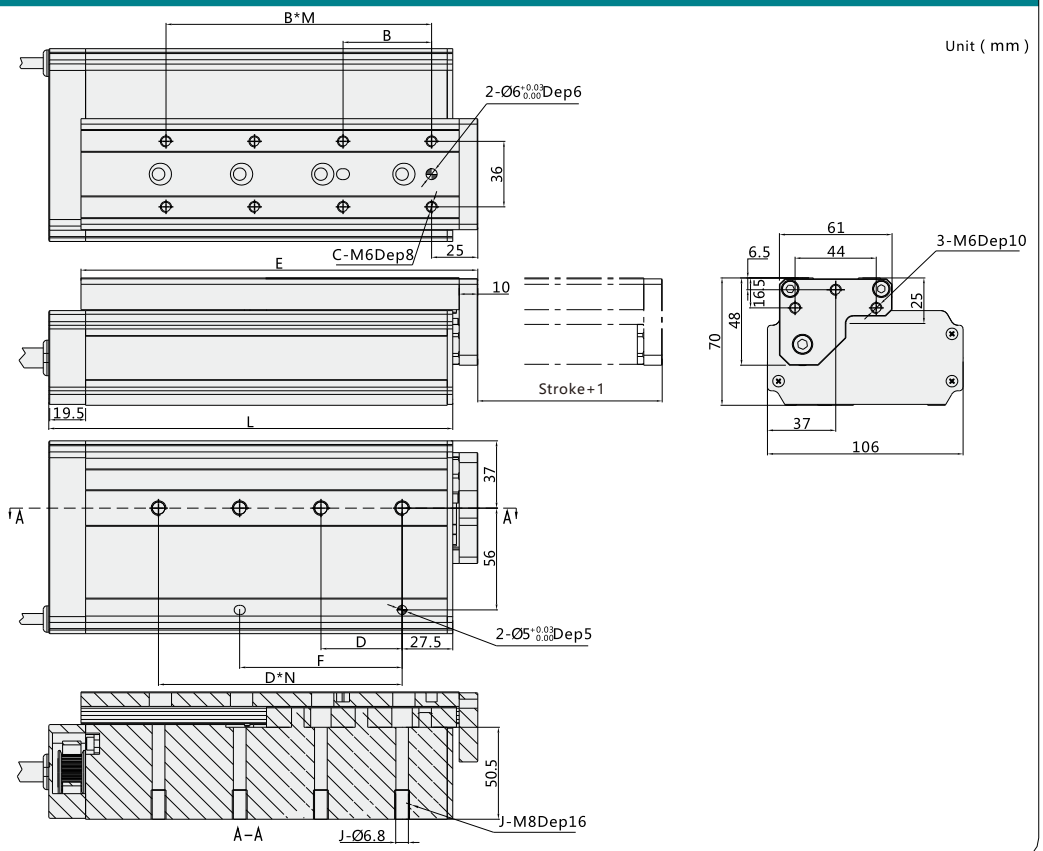

Working Stroke	50	100	150
L	155	219	297
B	75	48	65
C	4	8	8
D	80	44	66
M	1	3	3
N	1	3	3
E	151	215	293
F	80	88	132
J	2	4	4
Weight KG	2.8	3.3	4.3

V-ROBOT®
Linear Drives

Distributors for Australia & New Zealand

MOTION TECHNOLOGIES PTY LTD

24/22-30 Northumberland Road
Caringbah NSW 2229 Australia
Phone: (02) 9524 4782

sales@motiontech.com.au
www.motiontech.com.au

© 08/12/2020