V-ROBOT®
Linear Drives

www.motiontech.com.au

CONTENTS : TIMIMG BELT MODULES

Product Selection 002
Specification List 008
Cartesian Robot Configuration 010
Applications 015
Product Structure &Function 022
Product Selection Guidance 031
Motor's Flange Selection Tool 033

VBF10 081
VBF12 086
VBF14 091
VBF17 096
VBF22 101

RBC5 141
RBC6 144
VBC10 147
VBC12 152
VBC14 157
VBC17 162
LB6 168
LB8 171
GB5 174
GB5Z 177
GB8 180
GB8Z 185

VBF14S2 193

VBC14S2 201

W-ROBOT® Linear Drives

Integrated specifications with multi-functions for your various solutions in the various industries.

2 Timing belt drive/ Normal environment

▶P.080

Standard Type

Economy series

VBF10

Maximum Stroke	3000mm
Maximum Payload	15KG ····· 082
Body Width	100mm

Economy series

VBF12

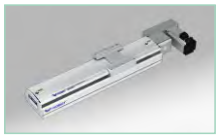

Maximum Stroke	3500mm
Maximum Payload	30KG ····· 087
Body Width	120mm

VBF14

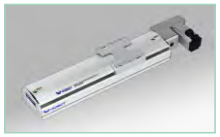

Maximum Stroke	3500mm
Maximum Payload	40KG ····· 092
Body Width	140mm

Large Type

Long stroke

VBF17

Maximum Stroke	3500mm
Maximum Payload	55KG ····· 097
Body Width	170mm

Long stroke

VBF22

Maximum Stroke	4000mm
Maximum Payload	85KG ····· 102
Body Width	220mm

Product Selection

4 Timing belt drive/Dust-free environment ▶P.140

Small Type

RBC5

Maximum Stroke	800mm
Maximum Payload	5KG ····· 142
Body Width	55mm

RBC6

Maximum Stroke	800mm
Maximum Payload	8KG ····· 145
Body Width	65mm

Standard Type

VBC10

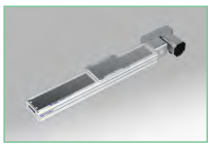

Maximum Stroke	3000mm
Maximum Payload	25KG ····· 148
Body Width	100mm

VBC12

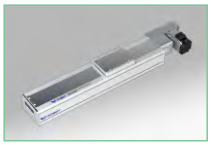

Maximum Stroke	3500mm
Maximum Payload	30KG ····· 153
Body Width	120mm

VBC14

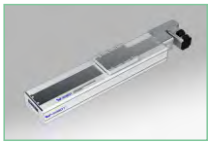

Maximum Stroke	3500mm
Maximum Payload	40KG ····· 158
Body Width	140mm

Large Type

Long stroke

VBC17

Maximum Stroke	3500mm
Maximum Payload	55KG ····· 163
Body Width	170mm

5 Timing belt drive/ Normal environment ▶P.167

Standard Type

Economy series

Long stroke

LB6

Maximum Stroke	5700mm
Maximum Payload	40KG ···· 169
Body Width	65mm

Economy series

Long stroke

LB8

Maximum Stroke	5700mm
Maximum Payload	68KG ····· 172
Body Width	80mm

Long stroke

GB5

Maximum Stroke	1500mm
Maximum Payload	5KG ····· 175
Body Width	55mm

Standard Type

Long stroke

GB5Z

Maximum Stroke	1500mm
Maximum Payload	5KG (Vertical Payload) ····· 178
Body Width	55mm

Long stroke

GB8

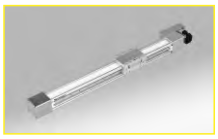

Maximum Stroke	5500mm
Maximum Payload	40KG ···· 181
Body Width	80mm

GB8Z

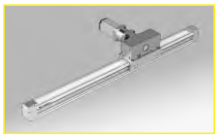

Maximum Stroke	2000mm
Maximum Payload	15KG ···· 186
Body Width	80mm

6 Dual motors series

▶ P.188

Timing belt drive/Normal environment

VBF14S2

Maximum Stroke	3000mm
Maximum Payload	∗20KGx2 ··· 194
Body Width	140mm

Timing belt drive/Dust-free environment

VBC14S2

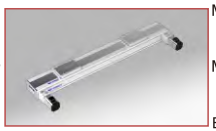

Maximum Stroke	3000mm
Maximum Payload	∗20KGx2···202
Body Width	140mm

Specification

W-ROBOT®
Linear Drives

Company	_____	Register Date	_____	Contact	_____
Dept	_____	Tel	_____	Ext	_____
E-mail	_____	Mobile	_____	Address	_____

Single axis required

Stroke (mm): _____

Speed (mm/s): _____

Payload (kg): _____

Repeatability(mm) :

☐ ±0.006

☐ ±0.01

☐ ±0.04

☐ Other _____

Usage Environment

☐ General

☐ Dust-free (Cleaness type)

(Cleanliness: Class10 Class100 Class1000)

Installation Way	Fixed whole-plane Horizontal 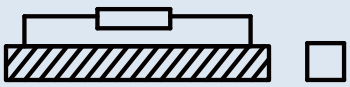 Side 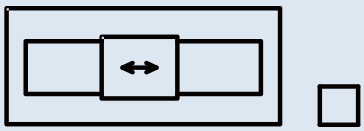 Vertical 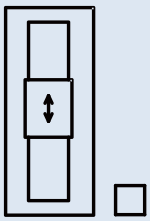
Space required	Loose model choice Ball Screw Drive 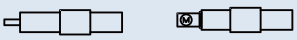 ☐BA ☐ BC (standard) Belt Drive 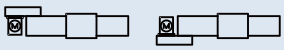 ☐BR ☐BL Compact model choice Ball Screw Drive 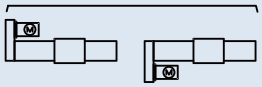 ☐BR ☐BL Belt Drive 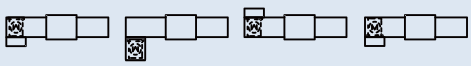 ☐BLU ☐BRU ☐BRD ☐BLD Motor Power can be increased by external installed
Sensor	☐ Optoelectronic type(External) ☐ Metal induction type(External)
Applications	☐ Automatic Assembly Machine ☐ Labeling Machine ☐ Film Sticking Machine ☐ Laminating Machine ☐ Auto-Screwdriving Machine ☐ Spraying Machine ☐ CCD Visual Inspection Equipment ☐ Loading and Unloading Equipment
Remarks	

Specification

Company	_____	Register Date	_____	Contact	_____
Dept	_____	Tel	_____	Ext	_____
E-mail	_____	Mobile	_____	Address	_____

Multi Axis Required

Stroke (mm) X: Y: Z:

Speed (mm/s) X: Y: Z:

Payload (kg):

Repeatability(mm) :

☐ ±0.006

☐ ±0.01

☐ ±0.04

☐ 其它(Other)_____

Usage Environment

☐ General

☐ Dust-free (Cleaness type)

(Cleanliness: Class10 Class100 Class1000)

Combination Types

Arm Type

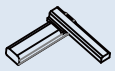

(A1) ☐

(A2) ☐

(A3) ☐

(A4) ☐

Gantry Type

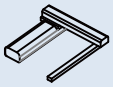

(G1) ☐

(G2) ☐

(G3) ☐

(G4) ☐

Moving Arm Type

(P1) ☐

(P2) ☐

XZ Type

(F1) ☐

(F2) ☐

Multi-axis Type

Reference the P11-15 : Images No.

☐ Arm type with 2-axis(A)

☐ Arm type with 3-axis(A)

☐ Gantry type with 2-axis(G)

☐ Gantry type with3-axis(G)

☐ Spontaneous Moving Gantry type with 2-axis(G)

☐ XY type with 2-axis(F)

☐ Moving arm type with 2-axis(P)

☐ Moving arm type with 3-axis(P)

Sensor

☐ Optoelectronic type(External) ☐ Metal induction type(External)

Applications

☐ Automatic Assembly Machine ☐ Film Sticking Machine ☐ Laminating Machine

☐ Auto-Screwdriving Machine ☐ Spraying Machine ☐ CCD Visual Inspection Equipment ☐ Other _____

Remarks

Cartesian Robot Configuration

W-ROBOT®
Linear Drives

Multi-axis combination models as figure below, if other models required, consultation service available basing on request.

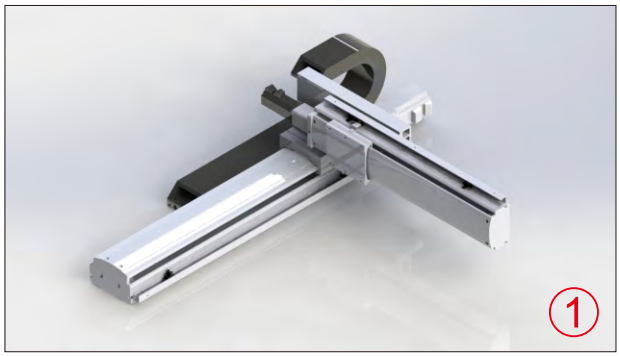

Arm type with 2 axes (A series)

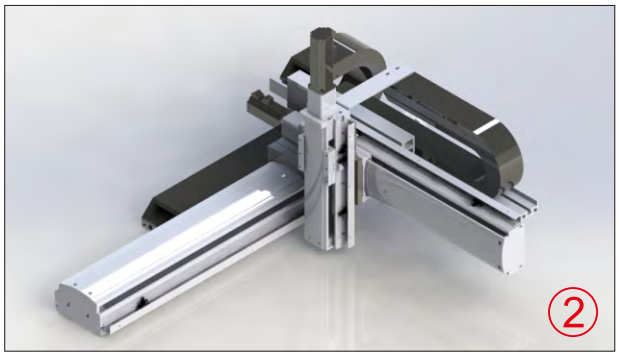

Arm type with 3 axes (A series)

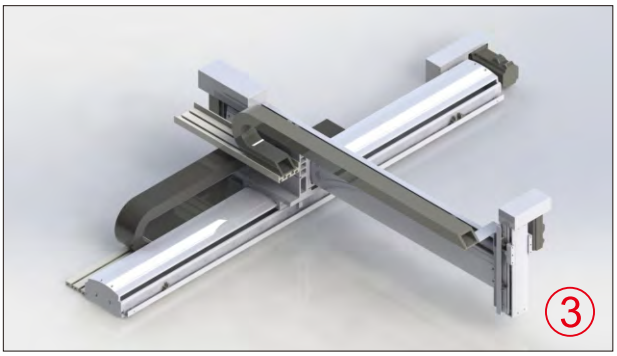

Arm type with 3 axes (A series)

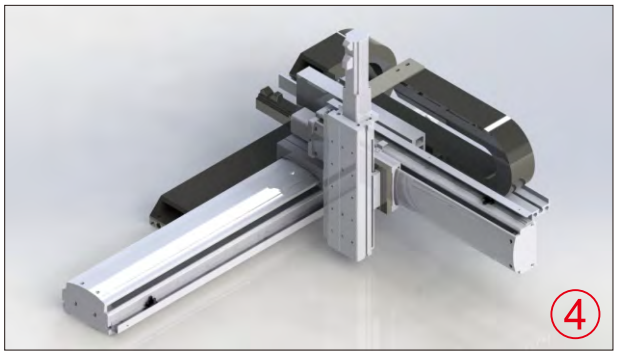

Arm type with 3 axes (A series)

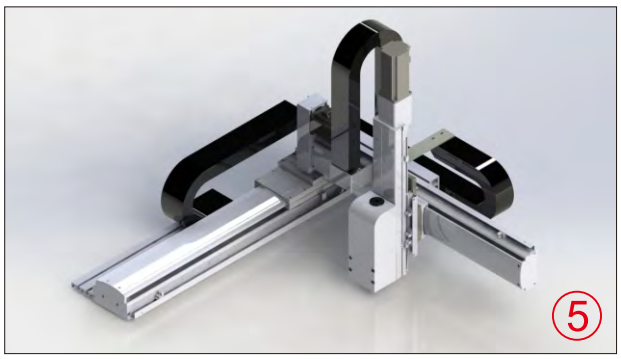

Arm type with 4 axes (AR series)

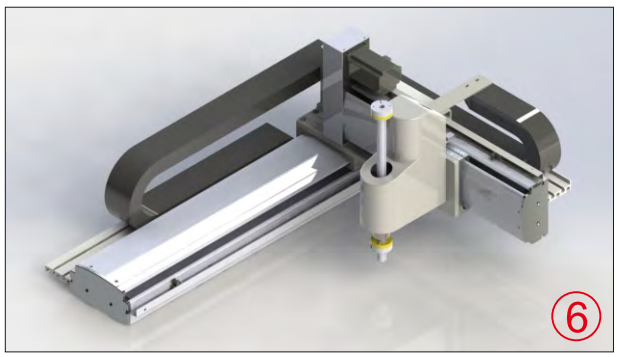

Arm type with 4 axes (AZR series)

Cartesian Robot Configuration

Arm type with 6 axes (A series)

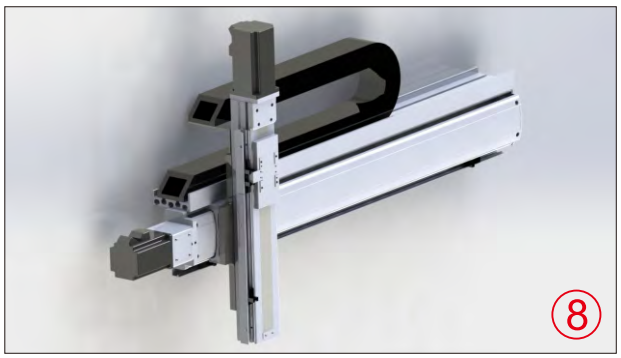

Cross 2 axes (F series)

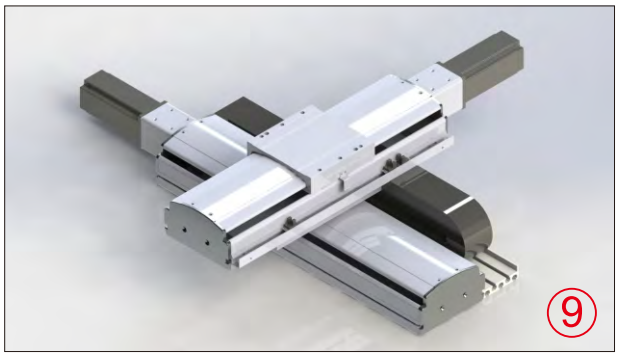

Cross 2 axes (F series-Horizontal)

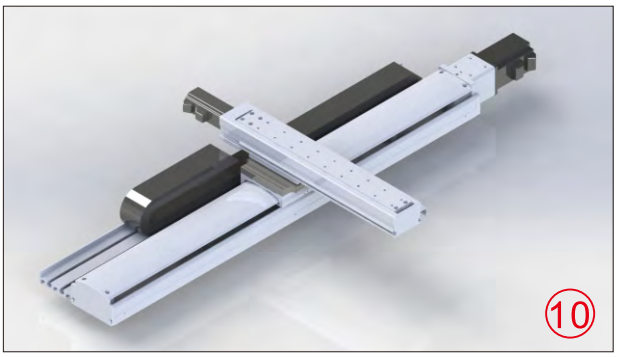

Cross 2 axes (F series-movement by Y axis)

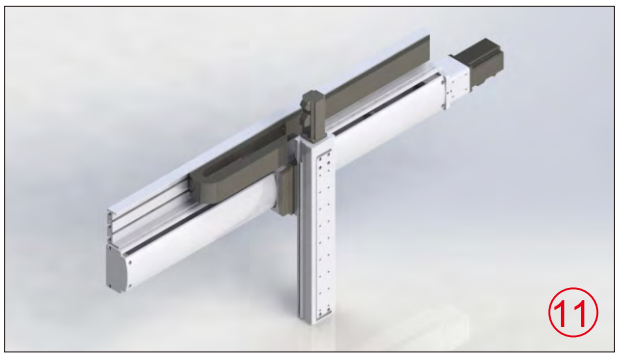

Cross 2 axes (F Series - Z-axis body moved)

Gantry 2 axes (G series)

Gantry 3 axes (G series)

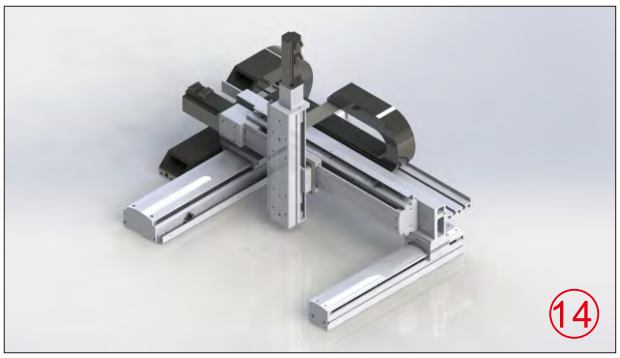

Gantry 3 axes (G series)

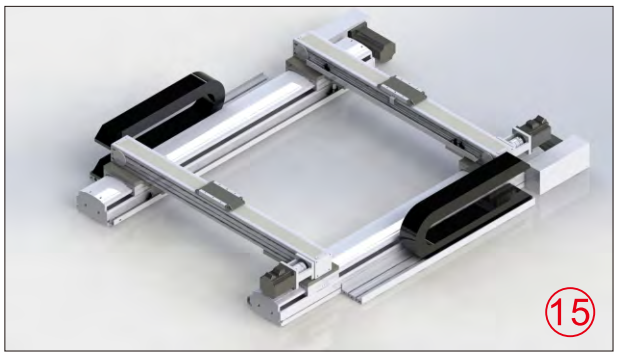

Gantry combinatorial association (G series)

Cartesian Robot Configuration

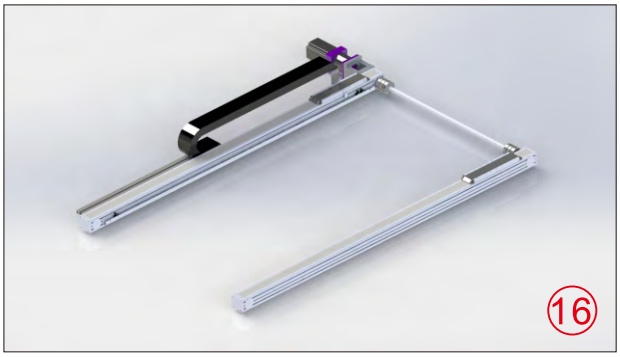

Synchronous moving gantry axes

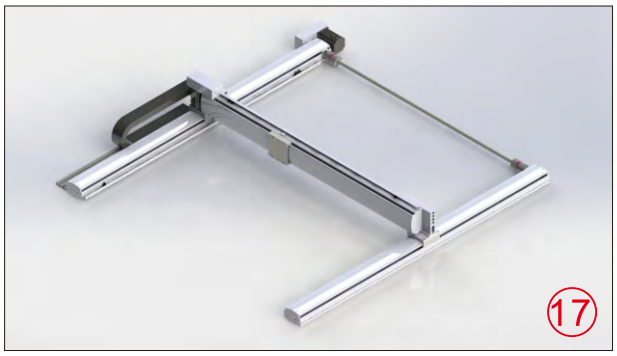

Synchronous moving gantry type with 2 axes

Synchronous moving gantry type with 3 axes

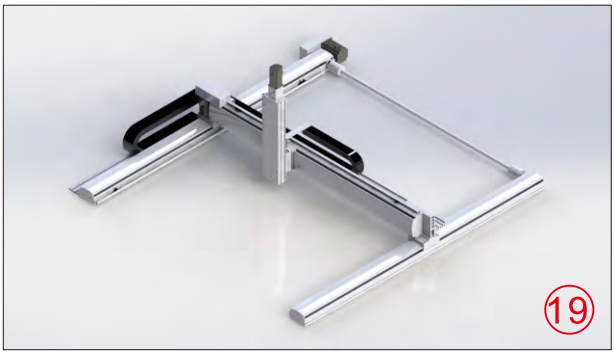

Synchronous moving gantry type with 3 axes
(G series- Z-axis body moved)

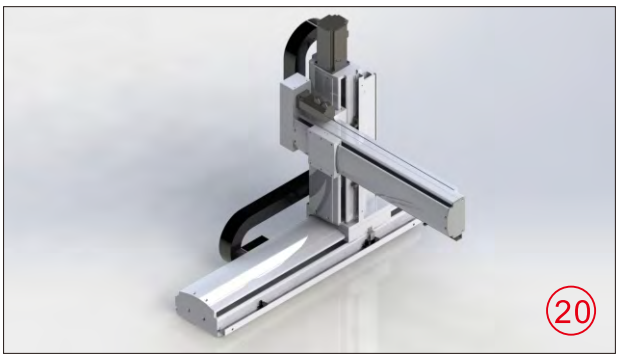

Moving arm type with 3 axes(P series)

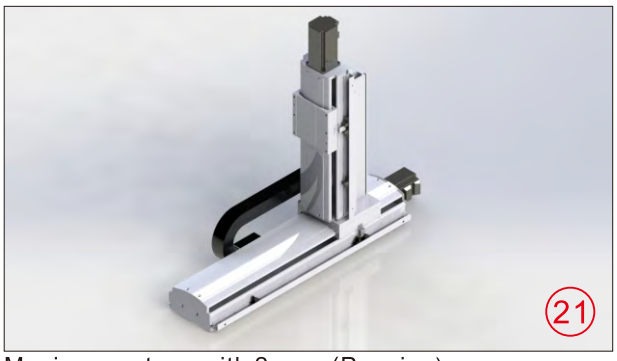

Moving arm type with 2 axes(P series)

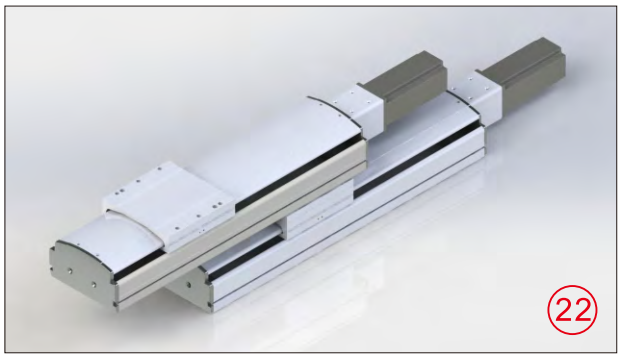

Stack-based 2 axes (E series)

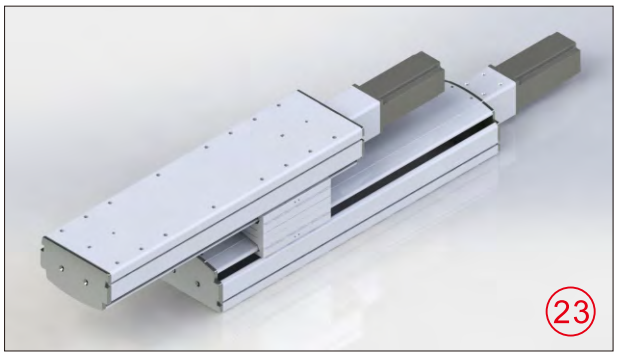

Stack-based 2 axes (E series-slide block fixed, body moved)

Moving arm type with 8 axes (P series)

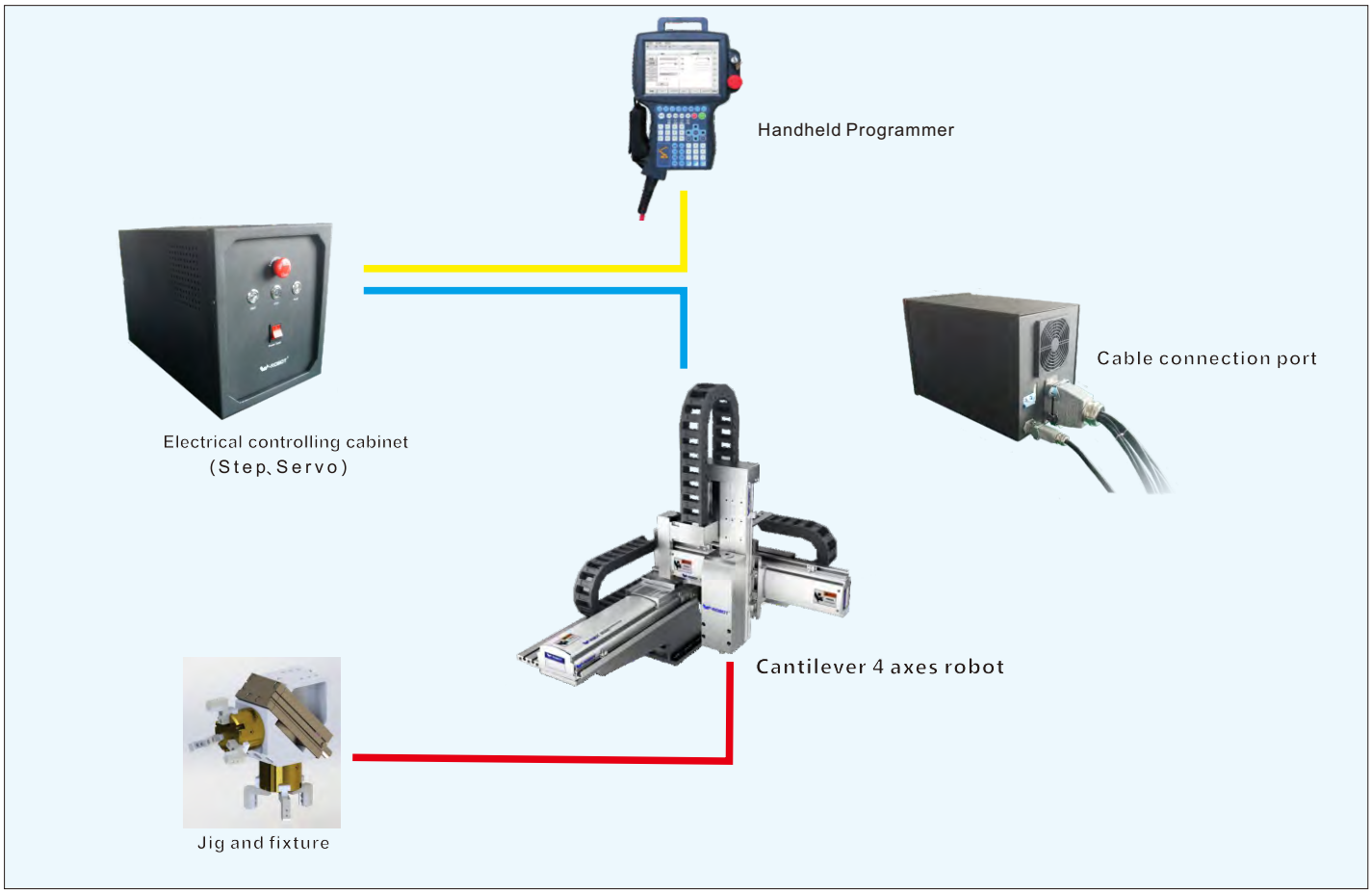

Robot arm control system

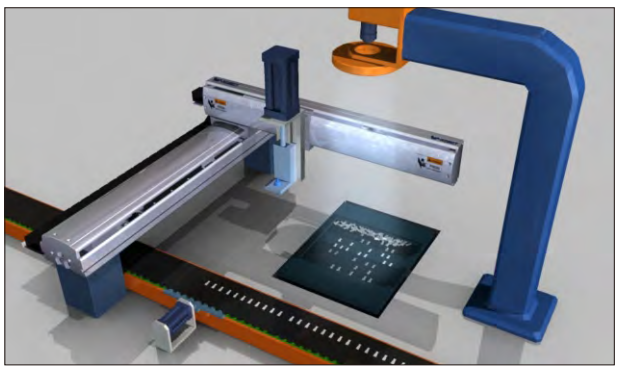

Auto-loading after CCD visual checking

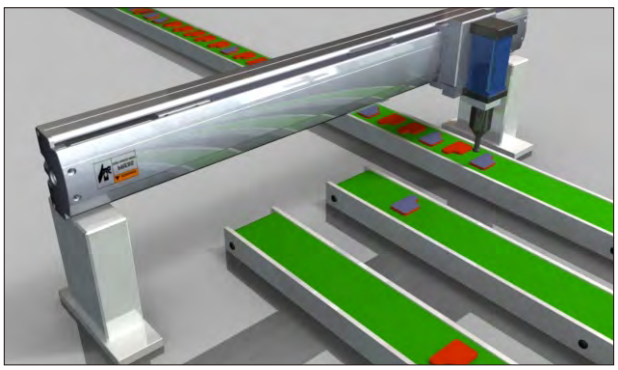

Sorting parts on the specified position

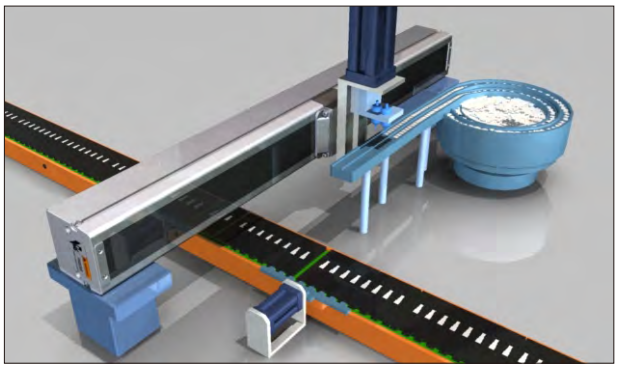

Picking parts from the vibrating bowl

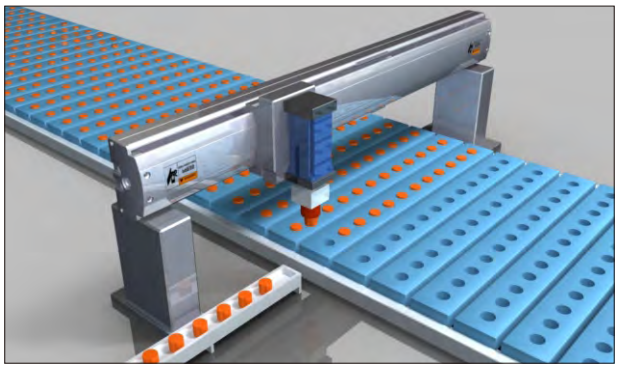

Press the workpiece into the hole

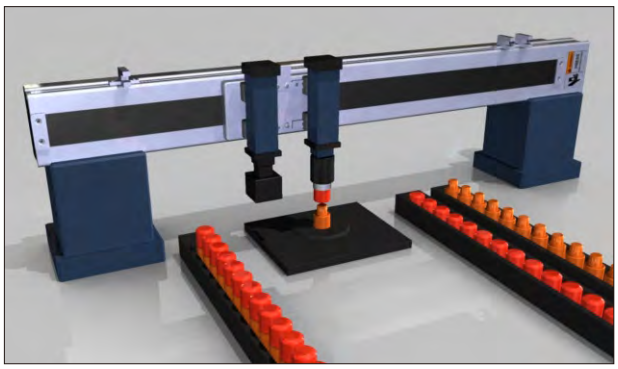

Parts assembling

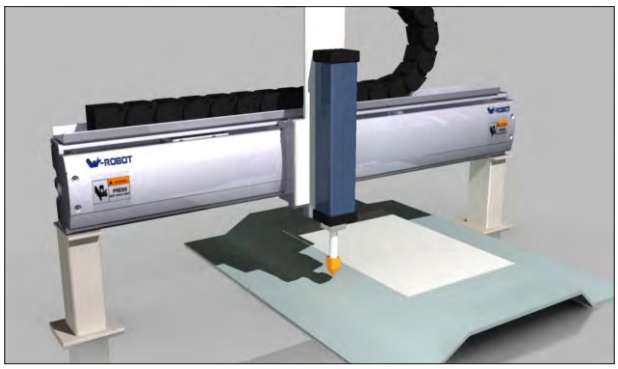

Inkjet operation

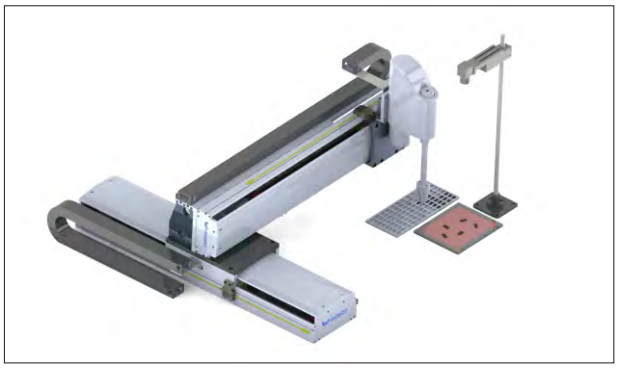

Flexible picking

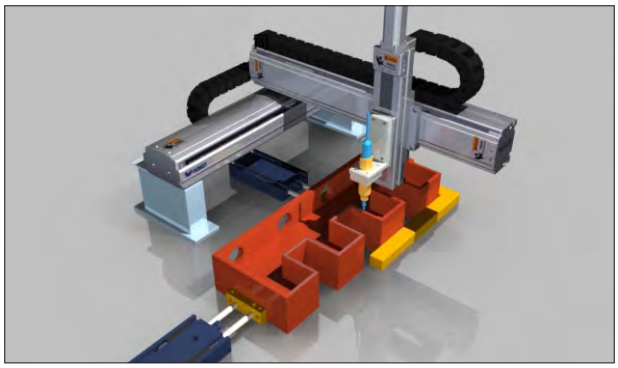

Sealant gluing to the joint of workpiece

Applications

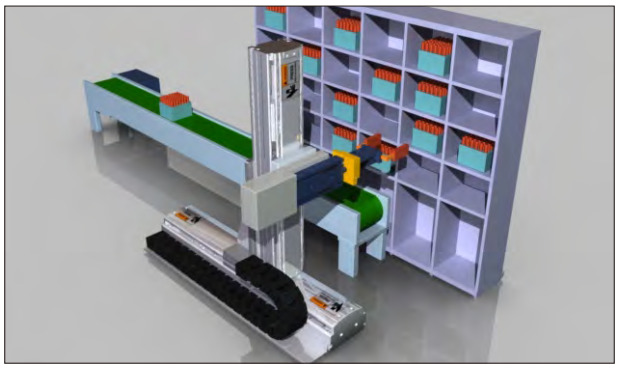

Large-scale parts rack pick & place

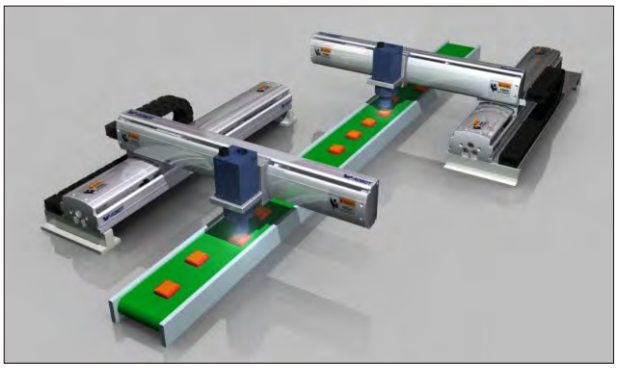

Electric parts testing

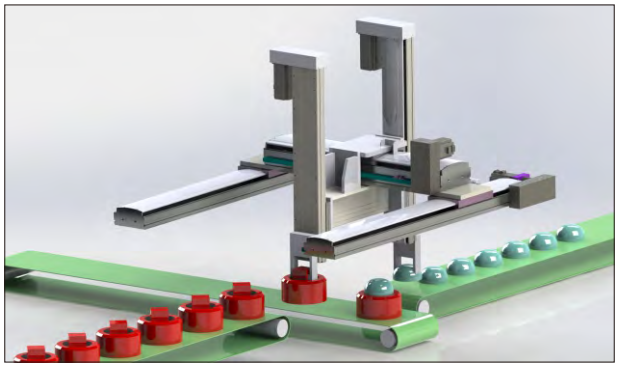

Parts handling

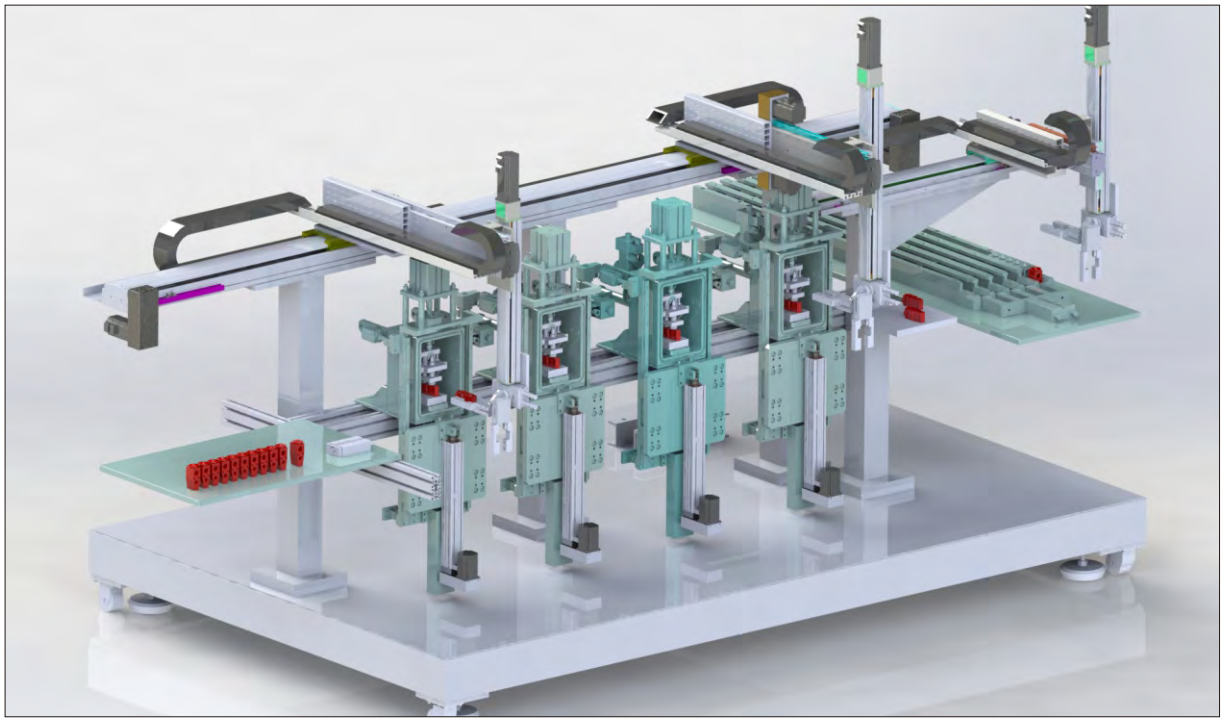

Auto-loading & unloading for parts testing system

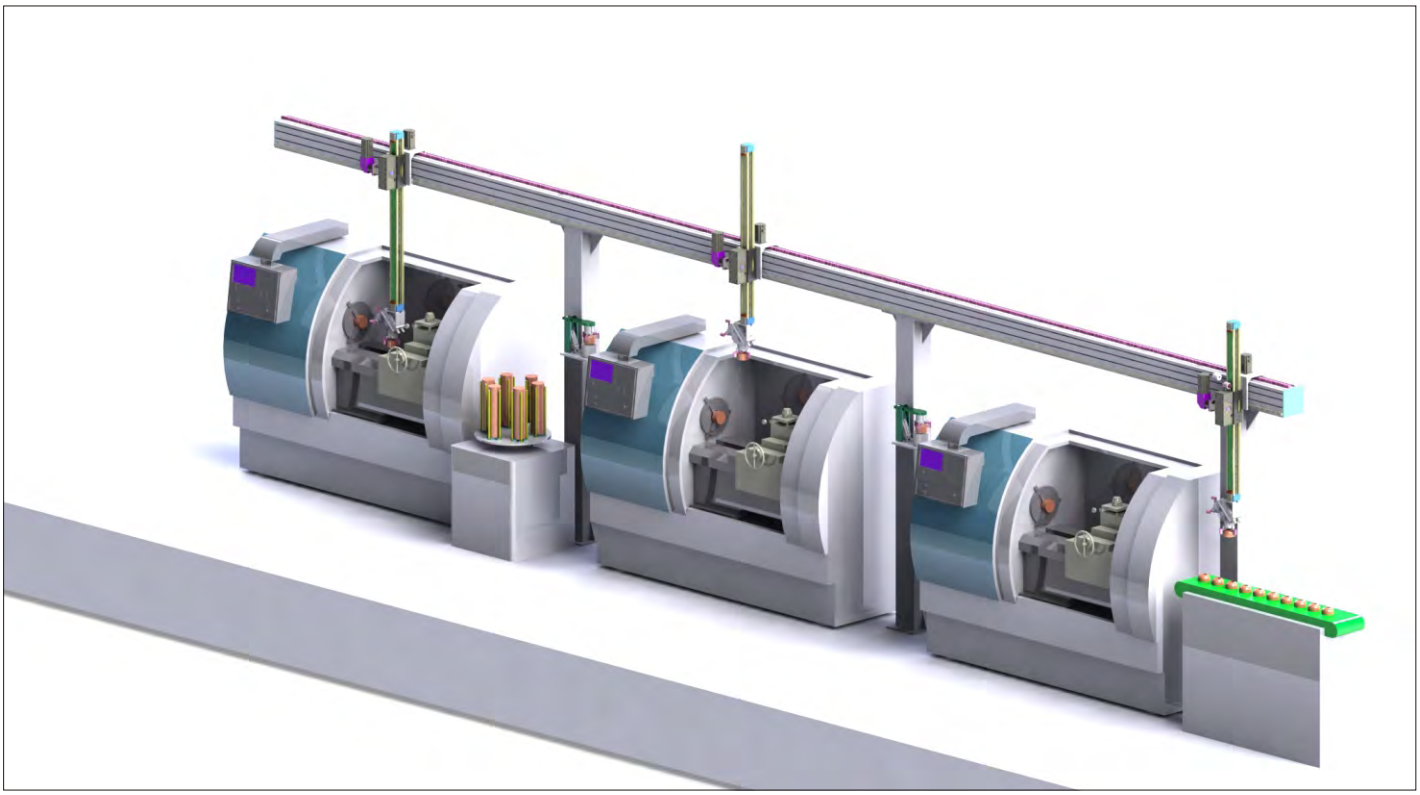

CNC loading & unloading

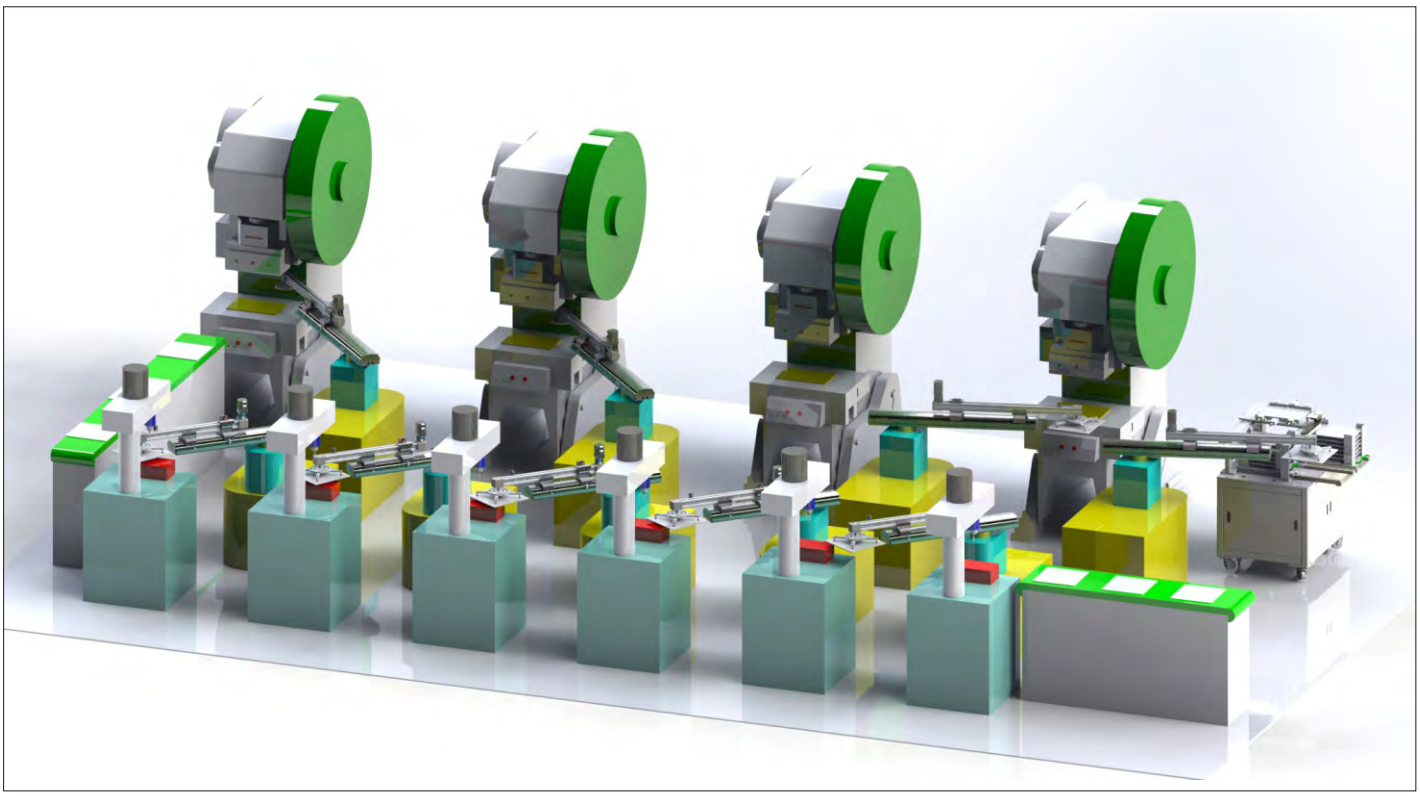

Punching

Applications

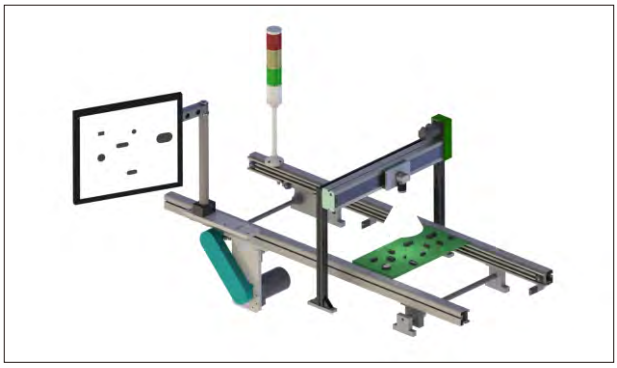

PCB testing

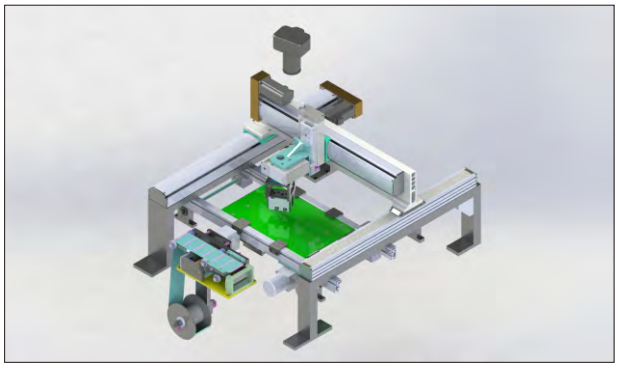

PCB labelling

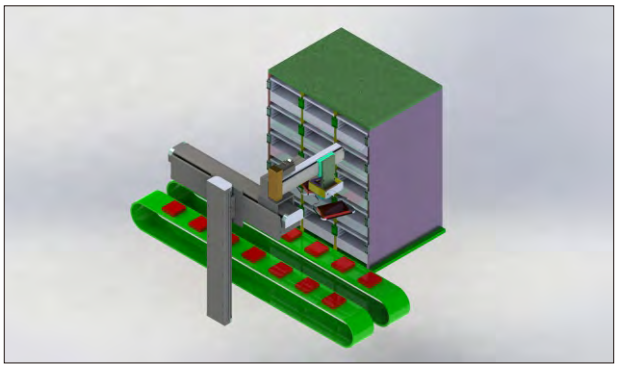

Products inside the shielded box loading & unloading

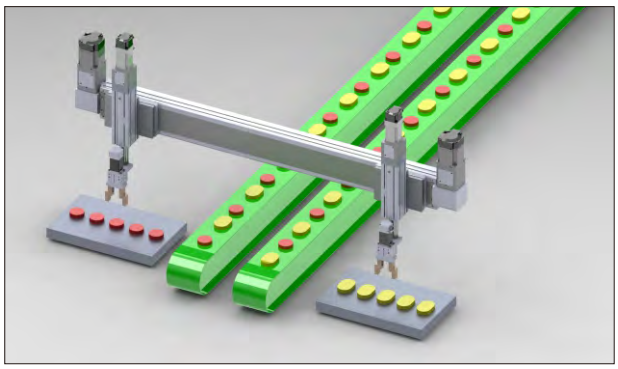

Multiple production lines with various products loading operation

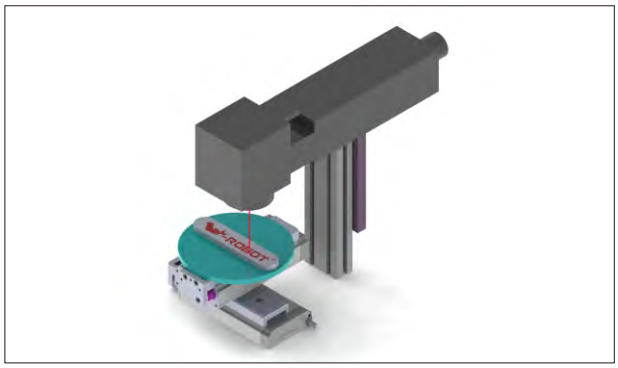

Laser marking

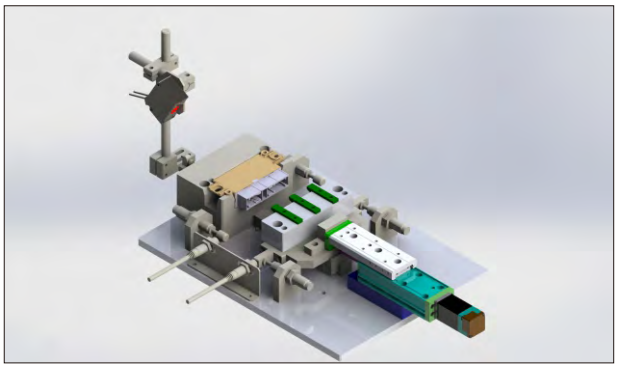

The connector insertion and pull test

Applications

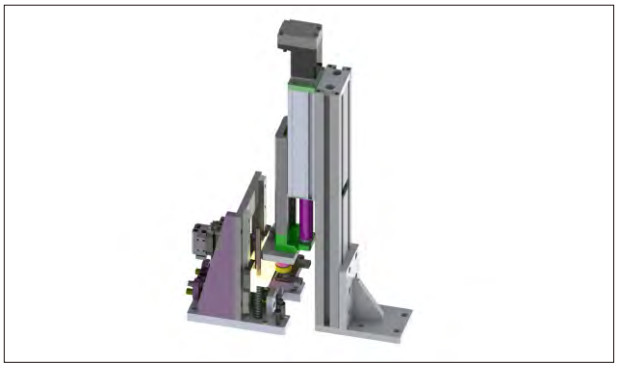

Pressing fit parts in a thrust

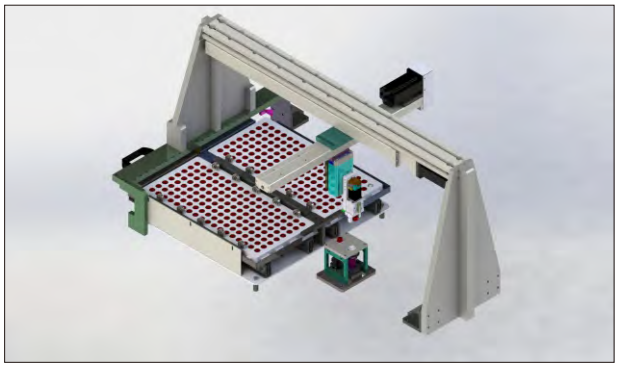

Picking and positioning auto parts

Sticking a mobile phone screen

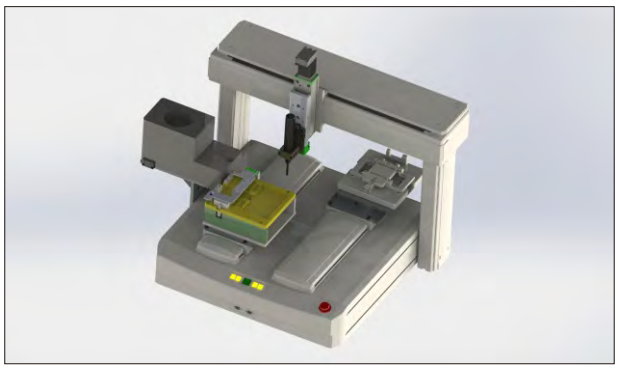

Automatic screw locking machine

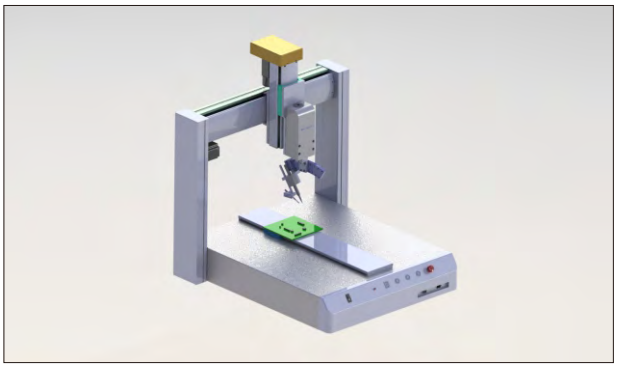

Automatic PCB welding operation

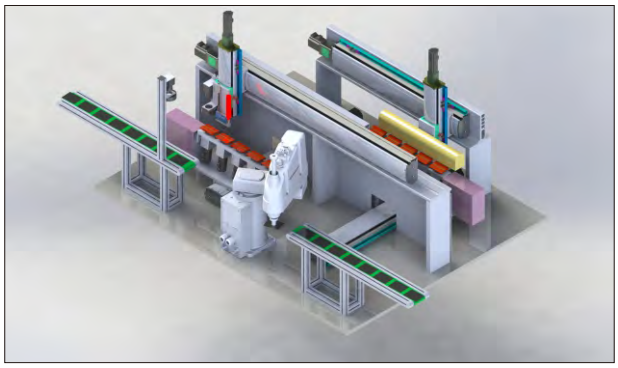

Flexible positioning and high speed precise dispensing

Multiple connections of input end

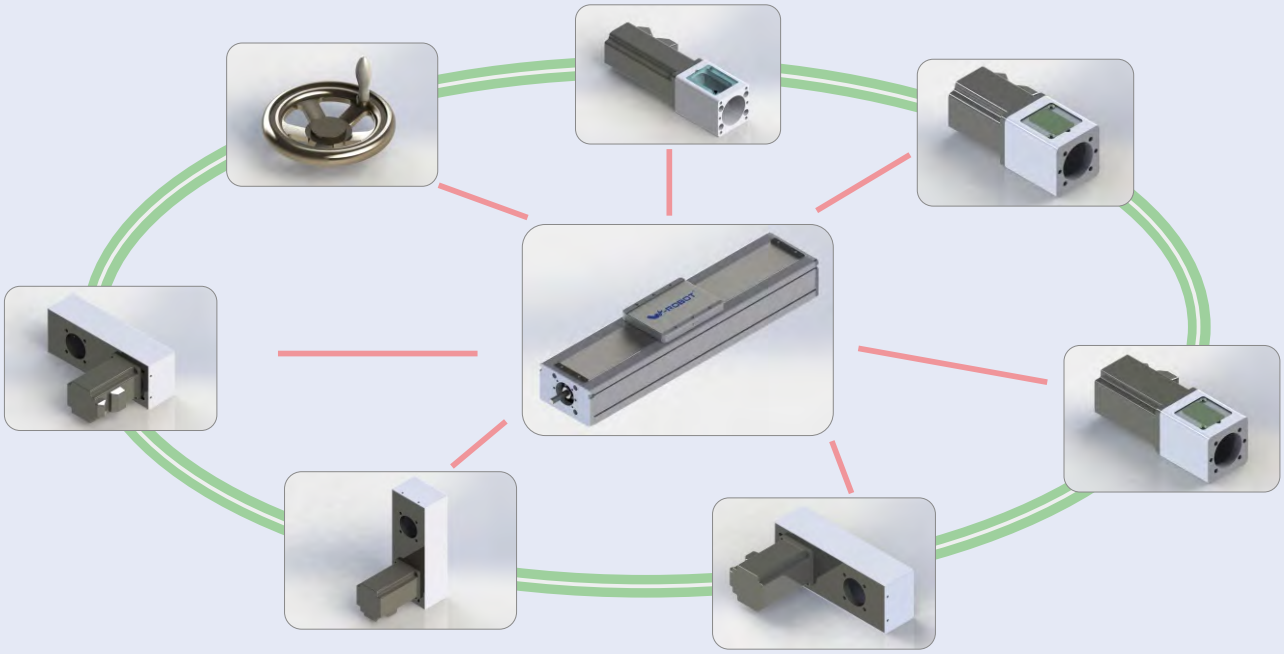

Multiple input available , High interchangeability,
No effect on Length of modules

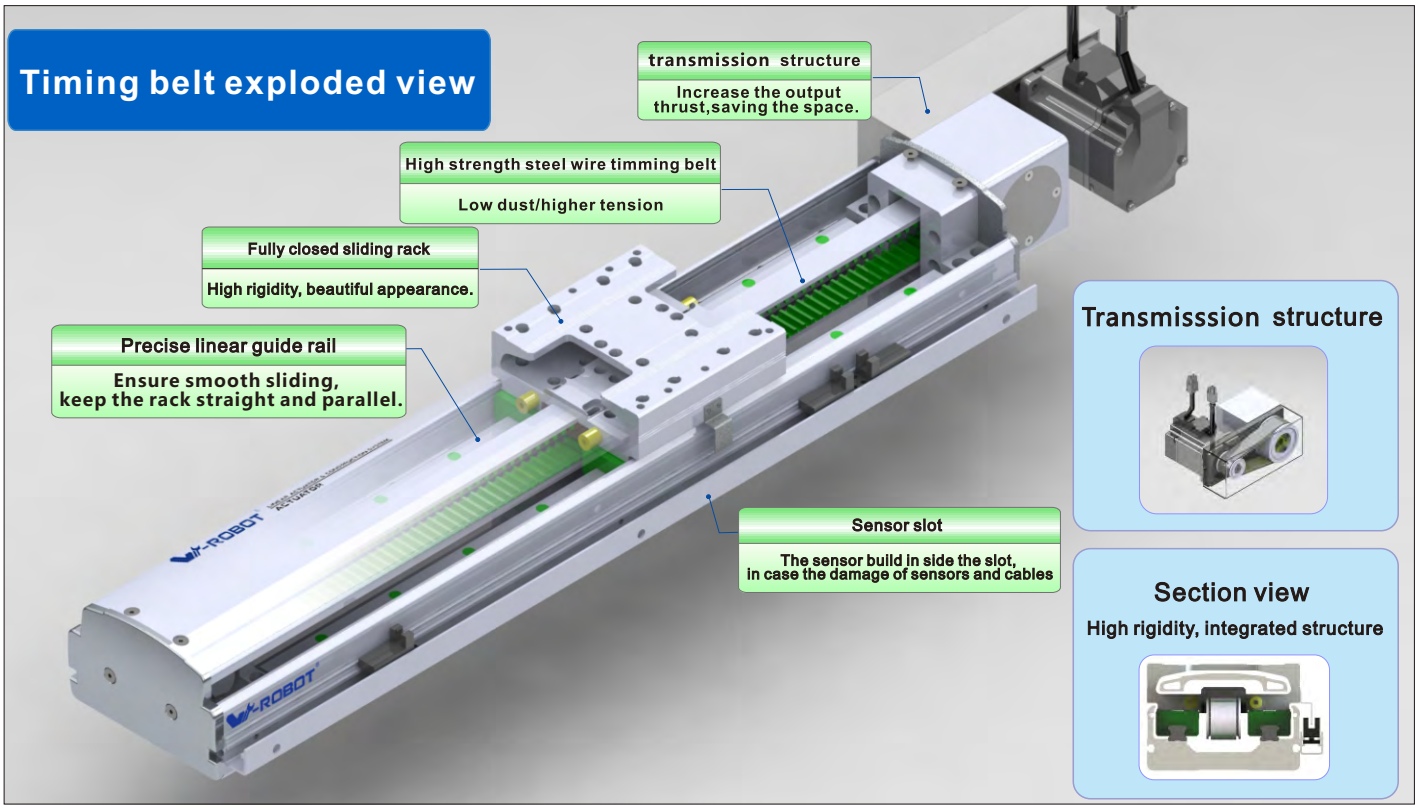
Timing belt exploded view
transmission structure
Increase the output thrust,saving the space.
High strength steel wire timming belt
Low dust/higher tension
Fully closed sliding rack
High rigidity, beautiful appearance.
Precise linear guide rail
Ensure smooth sliding, keep the rack straight and parallel.
Sensor slot
The sensor build in side the slot, in case the damage of sensors and cables
Transmisssion structure
Section view
High rigidity, integrated structure

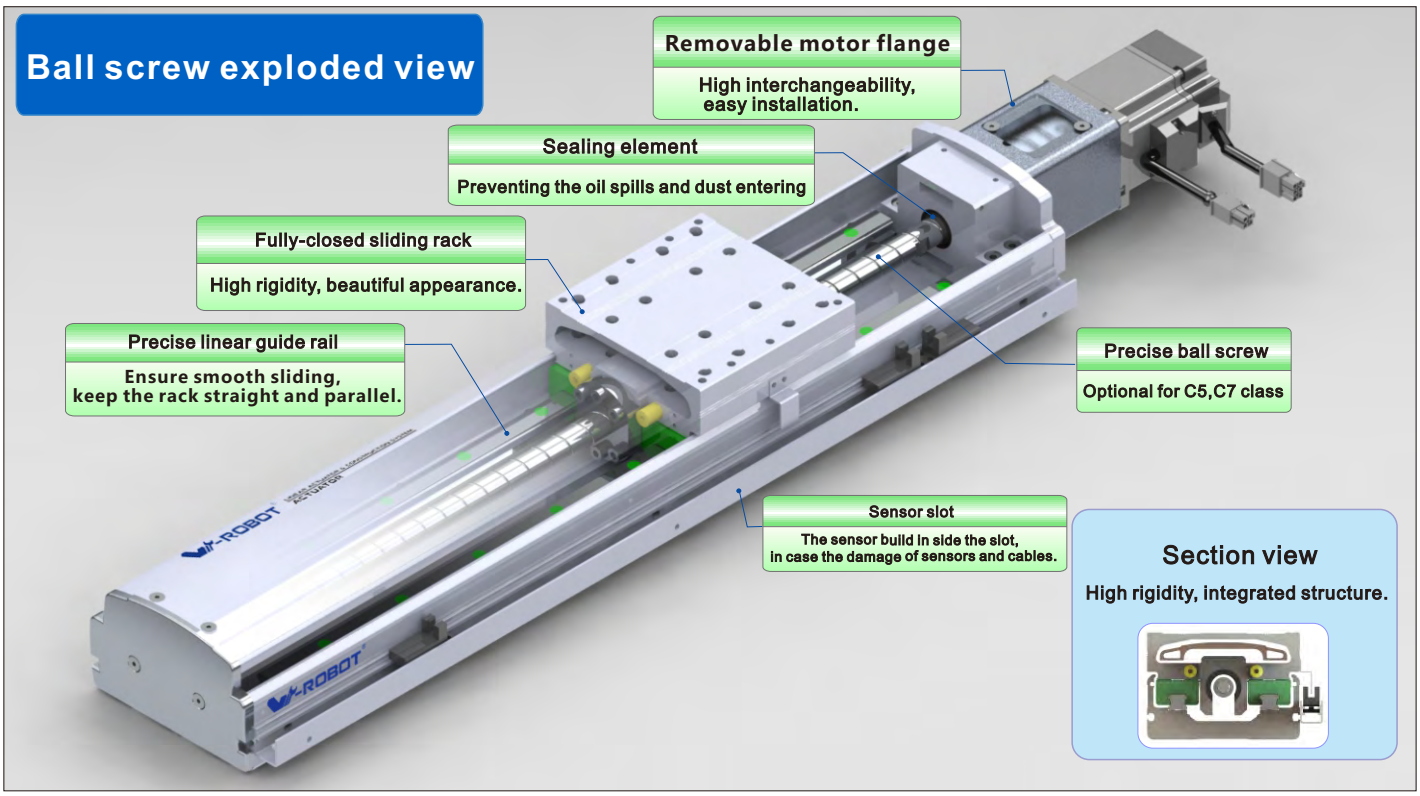
Ball screw exploded view
Removable motor flange
High interchangeability, easy installation.
Sealing element
Preventing the oil spills and dust entering
Fully-closed sliding rack
High rigidity, beautiful appearance.
Precise linear guide rail
Ensure smooth sliding, keep the rack straight and parallel.
Precise ball screw
Optional for C5,C7 class
Sensor slot
The sensor build in side the slot, in case the damage of sensors and cables.
Section view
High rigidity, integrated structure.

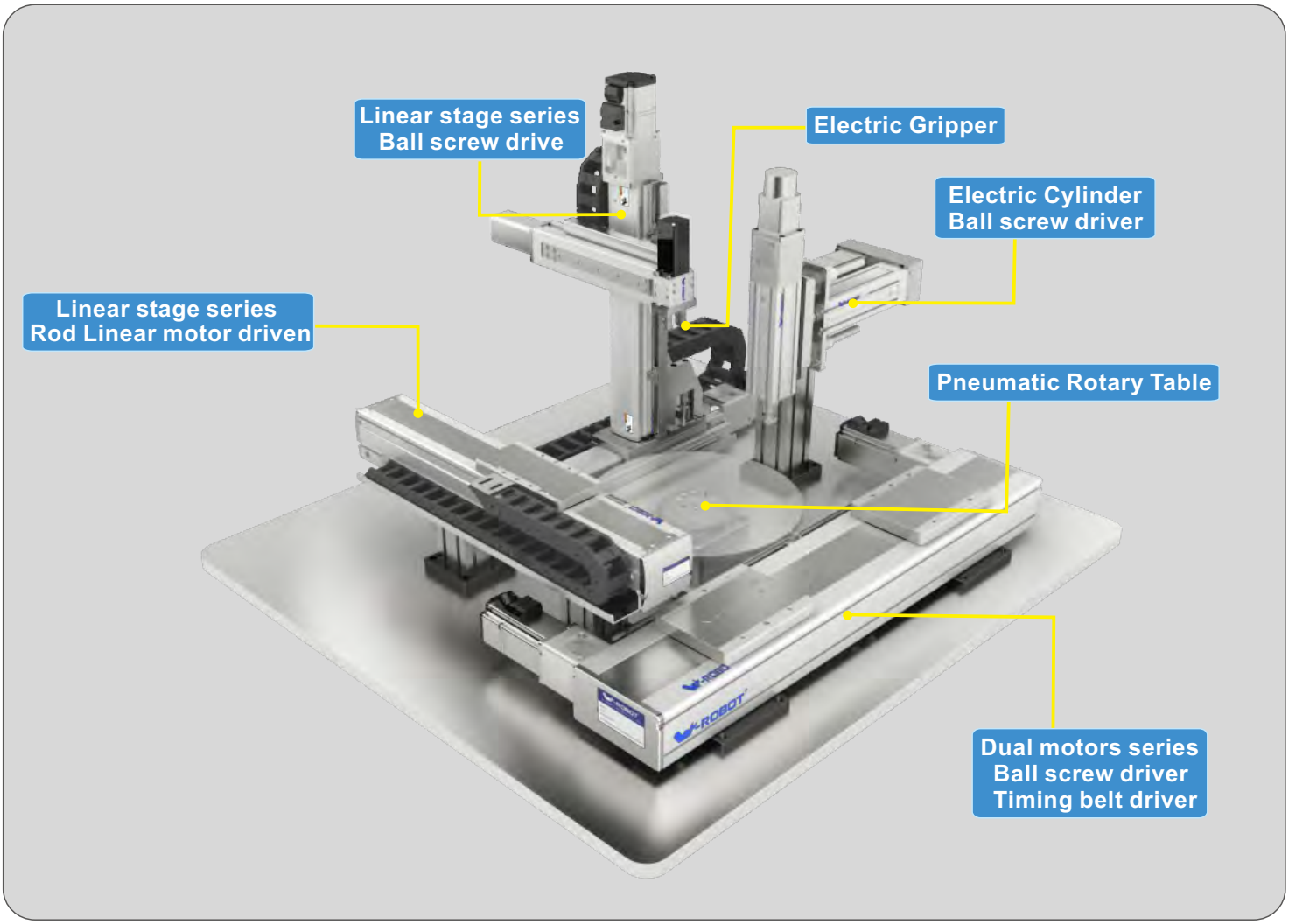
Linear stage series
Ball screw drive
Electric Gripper
Electric Cylinder
Ball screw driver
Linear stage series
Rod Linear motor driven
Pneumatic Rotary Table
Dual motors series
Ball screw driver
Timing belt driver

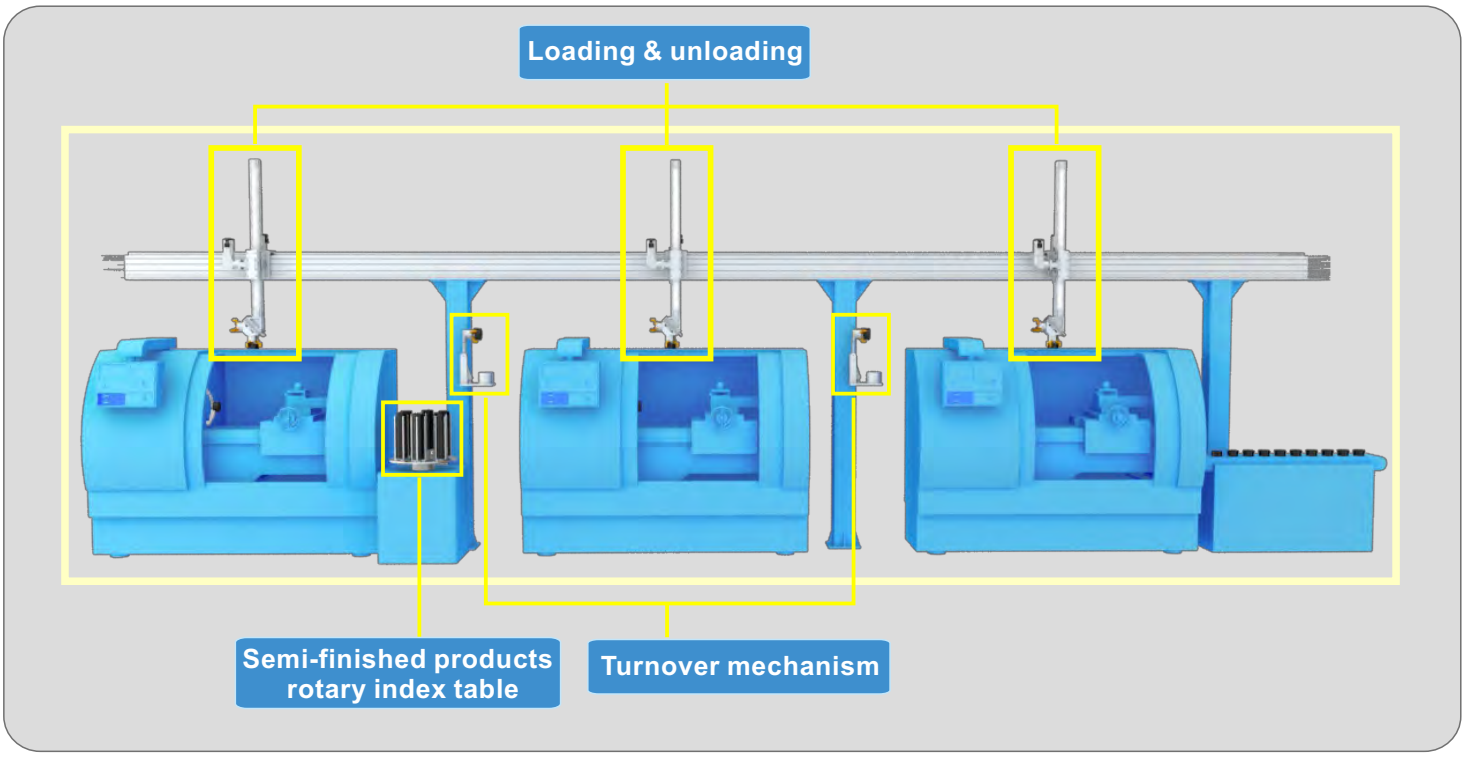
Loading & unloading
Semi-finished products
rotary index table
Turnover mechanism

Dual Motors Series

Pick & place on multi-station conveyor

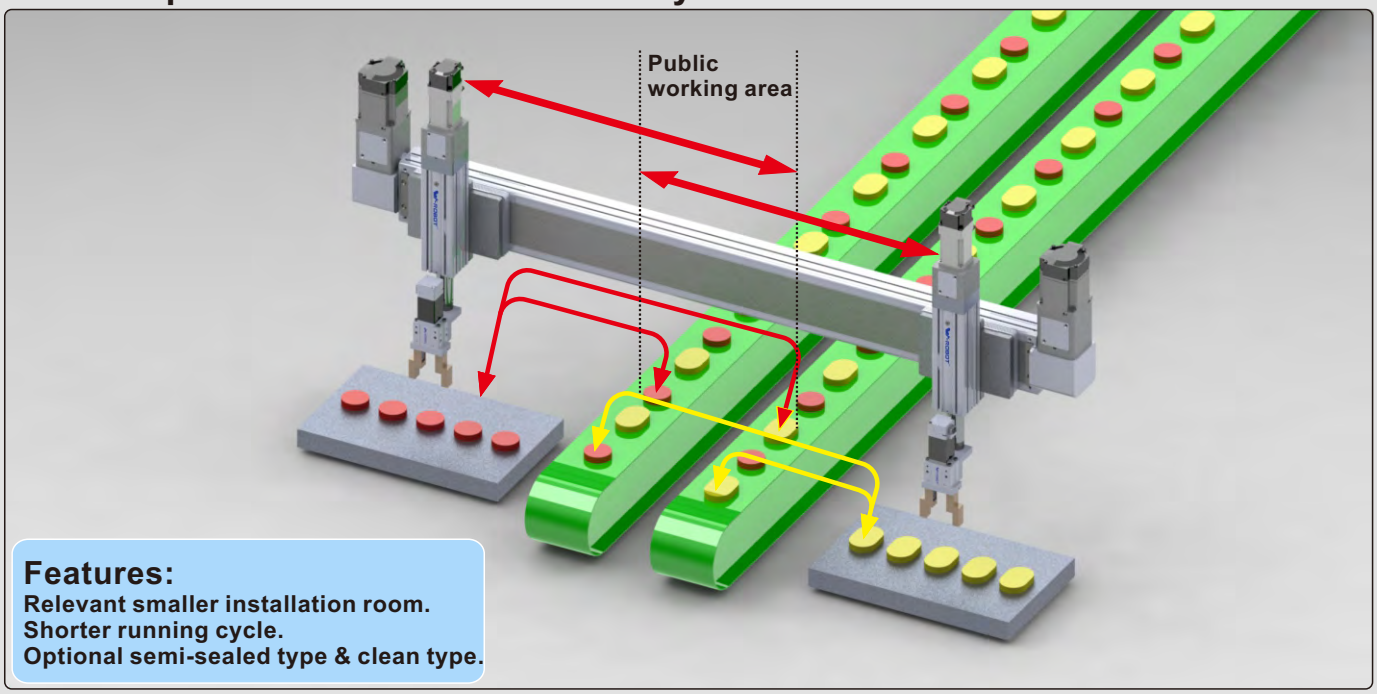

Features:
Relevant smaller installation room.
Shorter running cycle.
Optional semi-sealed type & clean type.

Loading & unloading on the multi-station testing equipment

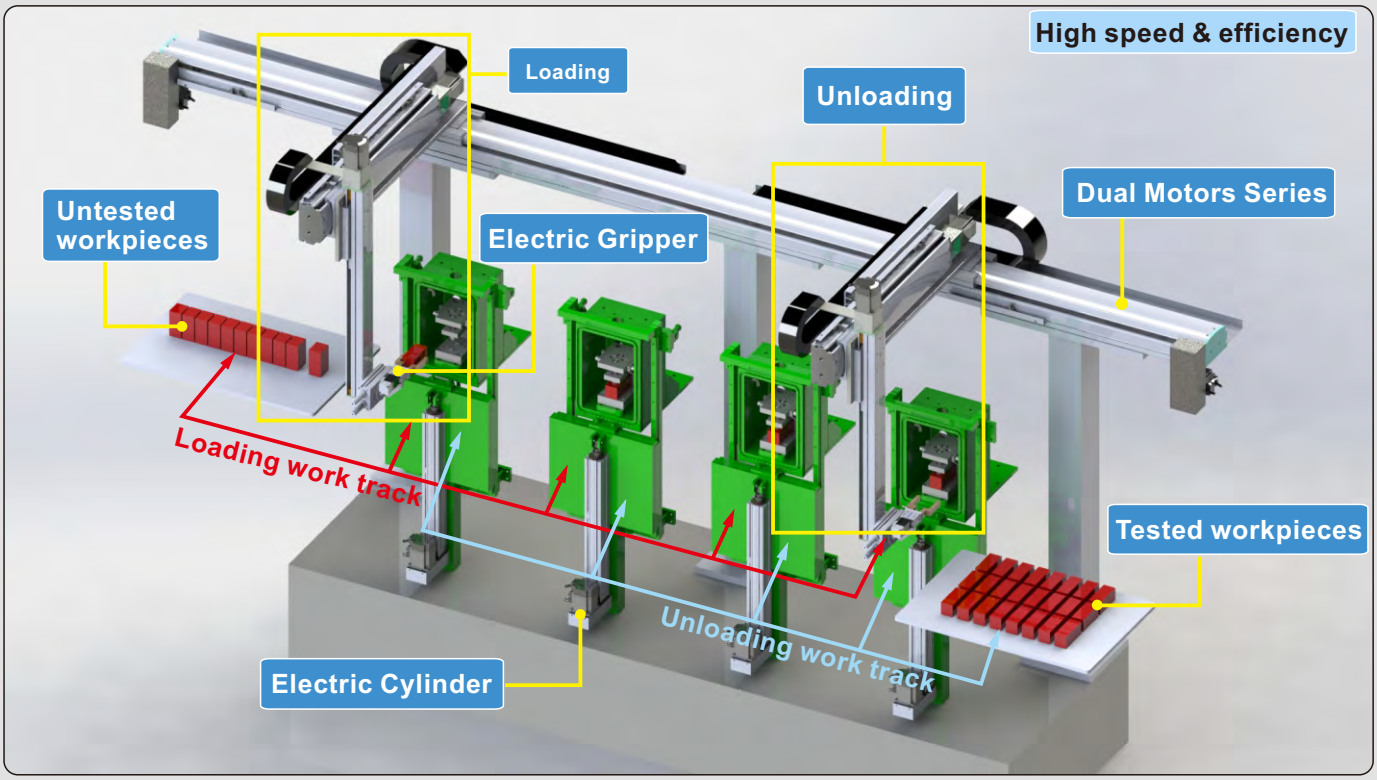

W-ROBOT® Linear Drives

Multi-axis Linear actuator item no. detailed specification

VF432A — A1 — 750BR — 450BR — 200BC — ZP — C — ____

Base Style
Vseries

Body width	
0	None
1	55mm
2	60mm
2A	65mm
2B	80mm
3	100mm
4	120mm
6	140mm
7	170mm
8	220mm

Combination	
A	Arm Type
G	Gantry Type
P	Moving Arm Type
F	XZ Type

Combination Direction	
1	Left X axis base fixed and Y axis forward direction
2	Left X axis base fixed and Y axis reverse direction
3	Right X axis base fixed and Y axis forward direction
4	Right X axis base fixed and Y axis reverse direction

X Stroke(mm)
100-1500

Motor way	
BA	Basis
BC	External
BR	Right Side
BL	Left Side

Y Stroke(mm)
100-1050

Z Stroke(mm)
100-550

Motor Type	
P	Panasonic
M	Mitsubishi
Y	Yaskawa
T	Delta
W	W-Robot

* For Z: Motor is from clients

Delivery Methode	
K	By Kit
C	By Set

Non-standard, d.c.,	
No	Standard type
A01	conbination of customization

The motor connecting flange >>>

Type	The motor connecting flange drawing	Motor size	Motor power	Motor shaft dia.	Motor brand	Reference No.
F1	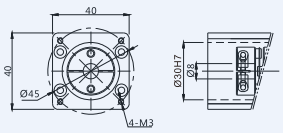	□38	100W	Ø8	Panasonic	MSMD012G1U
F2	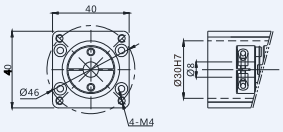	□40	100W	Ø8	Mitsubishi Yaskawa Delta Sankyo	HF-KN13 SGMJV-01ADA21 ECMA-C20401 MA101N2KN
F3	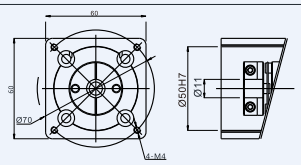	□60	200W	Ø11	Panasonic	MSMJ022G1U MHMJ022G1U
F4	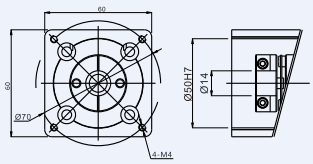	□60	400W	Ø14	Panasonic	MSMJ042G1U MHMJ042G1U
F5	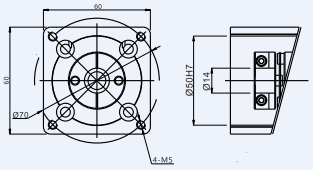	□60	200W 400W	Ø14 Ø14	Mitsubishi	HF-KN23 HF-KN43
					Yaskawa	SGMJV-02ADA21 SGMJV-04ADA21
					Delta	ECMA-C20602 ECMA-C20604
					Sankyo	MA201N2KN MA401N2KN
F6	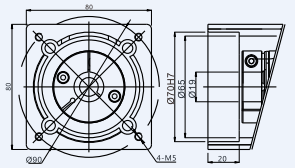	□80	750W	Ø19	Panasonic	MSMJ082G1U MHMJ082G1U
F7	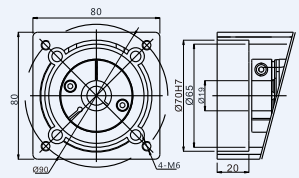	□80	750W	Ø19	Mitsubishi	HF-KN73
					Yaskawa	SGMJV-08ADA21
					Delta	ECMA-C20807
					Sankyo	MA751N2KN
F8	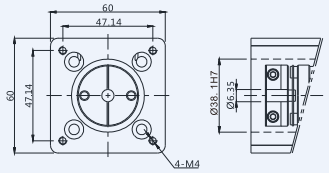	□56.4	57 Motor	Ø6.35	JMC	57J1876
					Leadshine	57HS09
F9	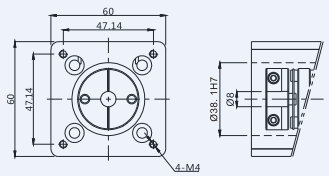	□56.4	57 Motor	Ø8	JMC	57J1880
					Leadshine	57HS22
					Oriental	PK266PA

Linear Stage Series

Timing Belt Drive
Normal Environment

Standard Type

VBF10

Economy series

Maximum Stroke	3000mm
Maximum Payload	15KG ·····082
Body Width	100mm

Standard Type

VBF12

Economy series

Maximum Stroke	3500mm
Maximum Payload	30KG ····· 087
Body Width	120mm

VBF14

Maximum Stroke	3500mm
Maximum Payload	40KG ····· 092
Body Width	140mm

Large Type

VBF17

Long stroke

Maximum Stroke	3500mm
Maximum Payload	55KG ····· 097
Body Width	170mm

Large Type

VBF22

Long stroke

Maximum Stroke	4000mm
Maximum Payload	85KG ·····102
Body Width	220mm

VBF10

Motor direction

BL	BR	BLU	BLD	BRU	BRD

Guide for Model Selection

VBF10 — L45 — S100 — BL — ZP20B — C3 — ____

Base Style	
V	V series
BF	Semiclosed with Frame Belt Type
10	Body width100

Leather belt Type	
L	Clean belt
X	Rubber belt
Lead	
45	45mm

Stroke(mm)
100-3000

Motor way	
BR	Right Side
BRU	Upper Right Side
BRD	Down Right Side
BL	Left Side
BLU	Upper Left Side
BLD	Down Left Side

Motor Type		Motor power	
P	Panasonic	20	200W
M	Mitsubishi	40	400W
Y	Yaskawa	57	Stepper
T	Delta	Brakes	
* For Z: Motor is from clients		No	No brake
		B	With brake

Original Sensor position		Sensor switch	
External		External	
C	Motor side	2	2pcs
D	Oppsite motor side	3	3pcs
E	No	No sensor	

Sensor type	
No	NPN
P	PNP

Non-standard, d.c.,	
No	Standard type
BL1	Detailed information please see page032
B2	
D01	
U01	
UD01	
H01	
HU01	
HD01	
HUD01	
M01	
S01	

VBF10

W-ROBOT® Linear Drives

Specification

Motor power AC (W)		200W
Drive Type		Timing belt driving
Repeatability		±0.04
Lead(mm)		45
MaximumSpeed(mm/sec) 3000 Motor Speed(rpm/mim)		2250
Maximum Payload(kg)	Horizontal	15
	Vertical	
RatedThrust(N)		85
Linear Guide (mm)		15x 12.5-2
Home Sensor		EE-SX672(NPN) EE-SX672P(PNP)
		Outside Guide EE-SX674(NPN) EE-SX674P(PNP)

Wiring drawing of inductor(original point and endpoint)

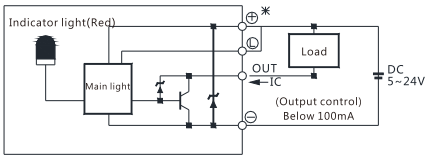

(Figure 1)

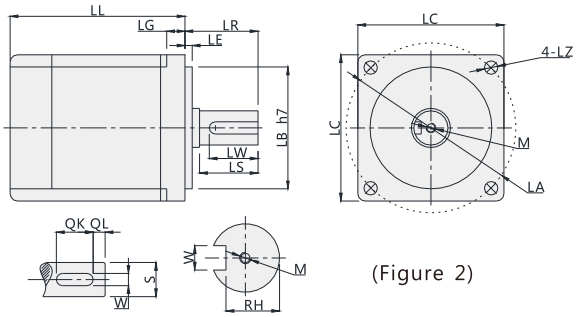

(Figure 2)

Servo Motor Matches List

(Table 1)

Servo motor size																			
Power(W)	Brand	Type		LL	LL(Brakes)	LA	LE	LZ	LC	LG	LW	RH	W	LR	S	LB	M	QK	QL
100W	Panasonic	MSMD012G1□	V:With brake U:No brake	92	122	45	3	3.4	38	6	14	6.2	3h9	25	8h6	30h7	M3x6L	-	-
	Delta	ECMA-C20401□S	S:With brake R:No brake	100.6	136.6	46	2.5	4.5	40	5	16	6.2	3	25	8h6	30h7	M3x8L	-	-
	Mitsubishi	HC-KFS12□K	B:With brake □:No brake	86.5	124.5	46	2.5	4.5	42	5	-	-	-	25	8h6	30h7	-	-	-
200W	Panasonic	MHMJ022G1□	V:With brake U:No brake	99	135.5	70	3	4.5	60	6.5	20	8.5	4h9	30	11h6	50h7	M4x8L	-	-
	Delta	ECMA-C20602□S	S:With brake R:No brake	105.5	141.5	70	3	5.5	60	7.5	20	11	5	30	14h6	50h7	M4x15L	-	-
	Mitsubishi	HC-KFS23□K	B:With brake □:No brake	99.5	131.5	70	3	5.8	62	7	-	-	-	30	14h6	50h7	-	-	-
400W	Panasonic	MHMJ042G1□	V:With brake U:No brake	118.5	155.5	70	3	4.5	60	6.5	20	11	5h9	30	14h6	50h7	M5x10L	-	-
	Delta	ECMA-C20604□S	S:With brake R:No brake	130.7	166.6	70	3	5.5	60	7.5	20	11	5	30	14h6	50h7	M4x15L	-	-
		ECMA-C20804□S	S:With brake R:No brake	112.3	152.8	90	3	6.6	80	8	20	11	5	35	14h6	70h7	M4x15L	-	-
	Mitsubishi	HC-KFS43□K	B:With brake □:No brake	124.5	165.5	70	3	5.8	62	7	-	-	-	30	14h6	50h7	-	-	-

Max. Payload Diameters Table

(Unit : mm)

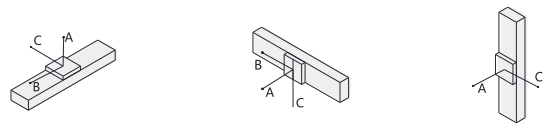

Horizontal installation	A	B	C
5kg	1400	750	600
8kg	1100	450	400
10kg	1000	350	350

Wall installation	A	B	C
5kg	660	500	1100
8kg	450	300	850
10kg	350	220	800

Max. Static Torque Table

(Unit : N.m)

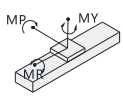

Maximum static torque	
MY	131
MP	131
MR	115

BR: Right Side

Unit (mm)

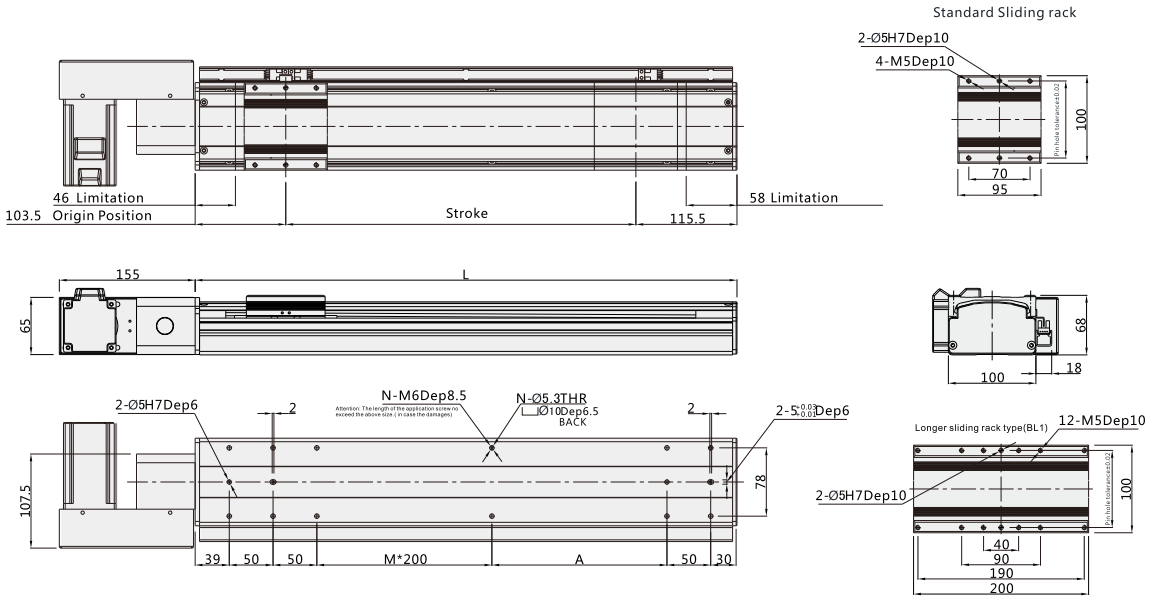

Note: Not including motor weight.

Working Stroke	100	150	200	250	300	350	400	450	500	550	600	650	700	750	800	850	900	950	1000	1050	1100	1150	1200	1250	1300	1350	1400	1450	1500
L	319	369	419	469	519	569	619	669	719	769	819	869	919	969	1019	1069	1119	1169	1219	1269	1319	1369	1419	1469	1519	1569	1619	1669	1719
M	0	0	0	1	1	1	1	2	2	2	2	3	3	3	3	4	4	4	4	5	5	5	5	6	6	6	6	7	7
N	10	10	10	12	12	12	12	14	14	14	14	16	16	16	16	18	18	18	18	20	20	20	20	22	22	22	22	24	24
A	100	150	200	50	100	150	200	50	100	150	200	50	100	150	200	50	100	150	200	50	100	150	200	50	100	150	200	50	100
Weight KG	4.5	5	5.5	6	6.5	7	7.5	8	8.5	9	9.5	10	10.5	11	11.5	12	12.5	13	13.5	14	14.5	15	15.5	16	16.5	17	17.5	18	18.5

*In case special stroke please contact technical services.

BRU: Upper Right Side

Unit (mm)

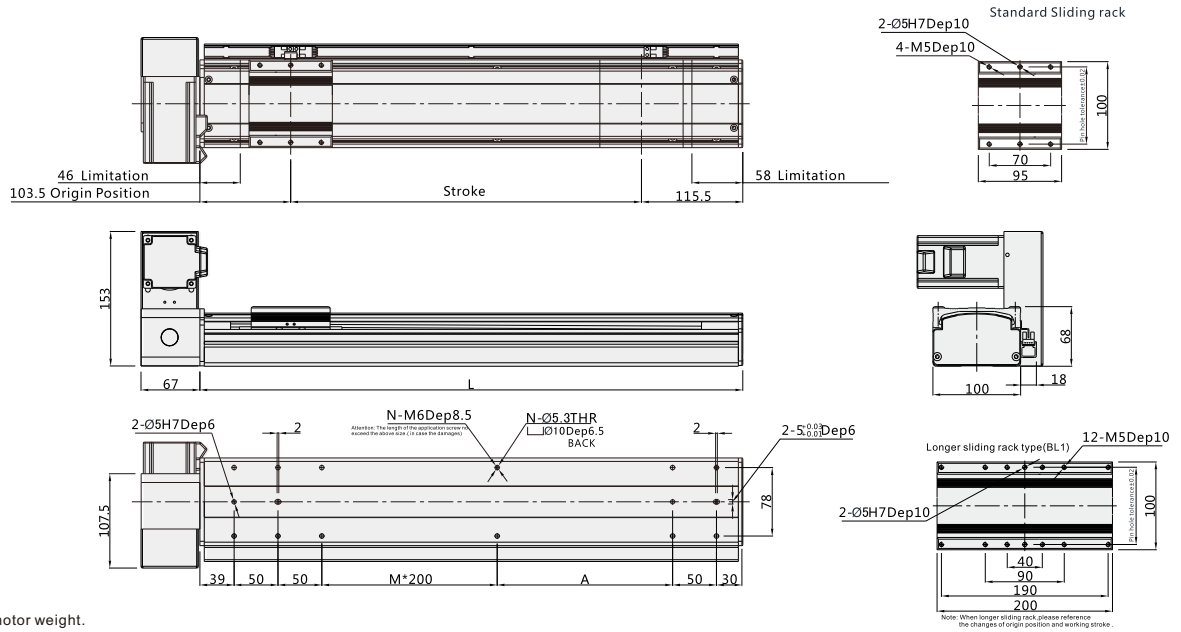

Note: Not including motor weight.

Working Stroke	100	150	200	250	300	350	400	450	500	550	600	650	700	750	800	850	900	950	1000	1050	1100	1150	1200	1250	1300	1350	1400	1450	1500
L	319	369	419	469	519	569	619	669	719	769	819	869	919	969	1019	1069	1119	1169	1219	1269	1319	1369	1419	1469	1519	1569	1619	1669	1719
M	0	0	0	1	1	1	1	2	2	2	2	3	3	3	3	4	4	4	4	5	5	5	5	6	6	6	6	7	7
N	10	10	10	12	12	12	12	14	14	14	14	16	16	16	16	18	18	18	18	20	20	20	20	22	22	22	22	24	24
A	100	150	200	50	100	150	200	50	100	150	200	50	100	150	200	50	100	150	200	50	100	150	200	50	100	150	200	50	100
Weight KG	4.5	5	5.5	6	6.5	7	7.5	8	8.5	9	9.5	10	10.5	11	11.5	12	12.5	13	13.5	14	14.5	15	15.5	16	16.5	17	17.5	18	18.5

*In case special stroke please contact technical services.

VBF10

W-ROBOT® Linear Drives

BRD: Down Right Side

Unit (mm)

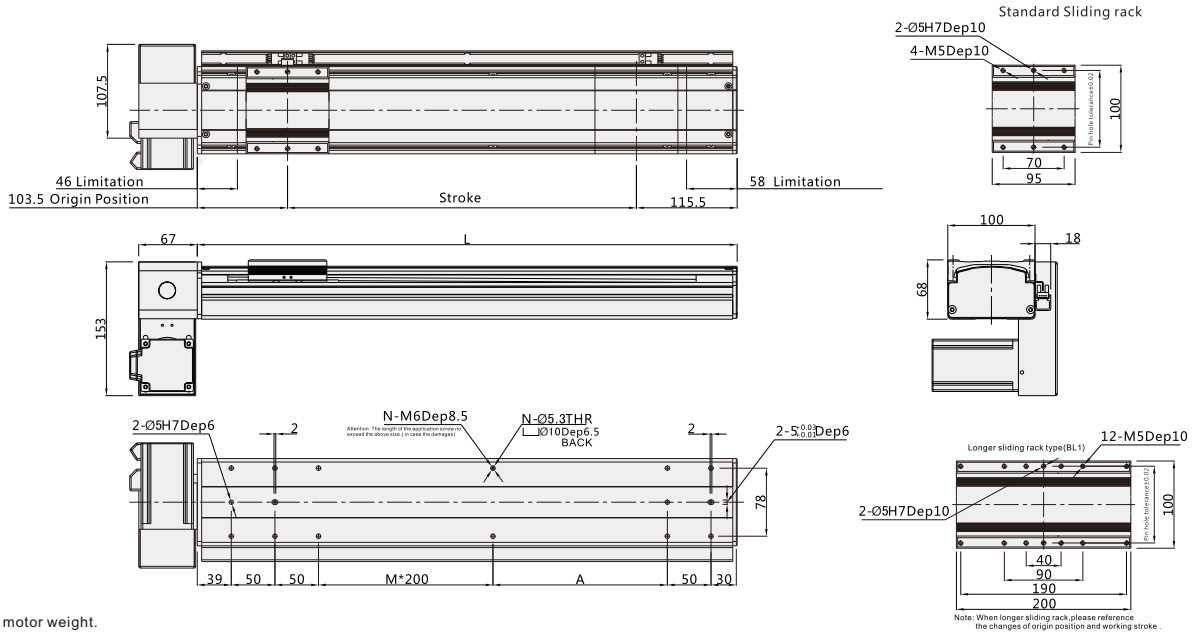

Note:Not including motor weight.

Working Stroke	100	150	200	250	300	350	400	450	500	550	600	650	700	750	800	850	900	950	1000	1050	1100	1150	1200	1250	1300	1350	1400	1450	1500
L	319	369	419	469	519	569	619	669	719	769	819	869	919	969	1019	1069	1119	1169	1219	1269	1319	1369	1419	1469	1519	1569	1619	1669	1719
M	0	0	0	1	1	1	1	2	2	2	2	3	3	3	3	4	4	4	4	5	5	5	5	6	6	6	6	7	7
N	10	10	10	12	12	12	12	14	14	14	14	16	16	16	16	18	18	18	18	20	20	20	20	22	22	22	22	24	24
A	100	150	200	50	100	150	200	50	100	150	200	50	100	150	200	50	100	150	200	50	100	150	200	50	100	150	200	50	100
Weight KG	4.5	5	5.5	6	6.5	7	7.5	8	8.5	9	9.5	10	10.5	11	11.5	12	12.5	13	13.5	14	14.5	15	15.5	16	16.5	17	17.5	18	18.5

*In case special stroke please contact technical services.

BL: Left Side

Unit (mm)

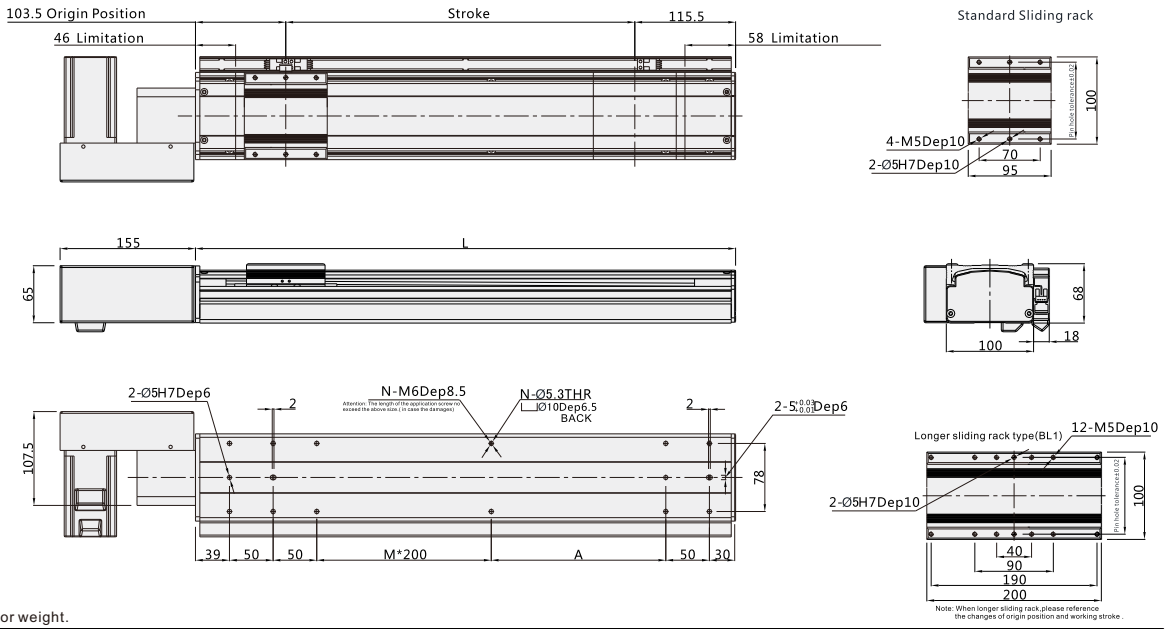

Note: Not including motor weight.

Working Stroke	100	150	200	250	300	350	400	450	500	550	600	650	700	750	800	850	900	950	1000	1050	1100	1150	1200	1250	1300	1350	1400	1450	1500
L	319	369	419	469	519	569	619	669	719	769	819	869	919	969	1019	1069	1119	1169	1219	1269	1319	1369	1419	1469	1519	1569	1619	1669	1719
M	0	0	0	1	1	1	1	2	2	2	2	3	3	3	3	4	4	4	4	5	5	5	5	6	6	6	6	7	7
N	10	10	10	12	12	12	12	14	14	14	14	16	16	16	16	18	18	18	18	20	20	20	20	22	22	22	22	24	24
A	100	150	200	50	100	150	200	50	100	150	200	50	100	150	200	50	100	150	200	50	100	150	200	50	100	150	200	50	100
Weight KG	4.5	5	5.5	6	6.5	7	7.5	8	8.5	9	9.5	10	10.5	11	11.5	12	12.5	13	13.5	14	14.5	15	15.5	16	16.5	17	17.5	18	18.5

*In case special stroke please contact technical services.

BLU: Upper Left Side

Unit (mm)

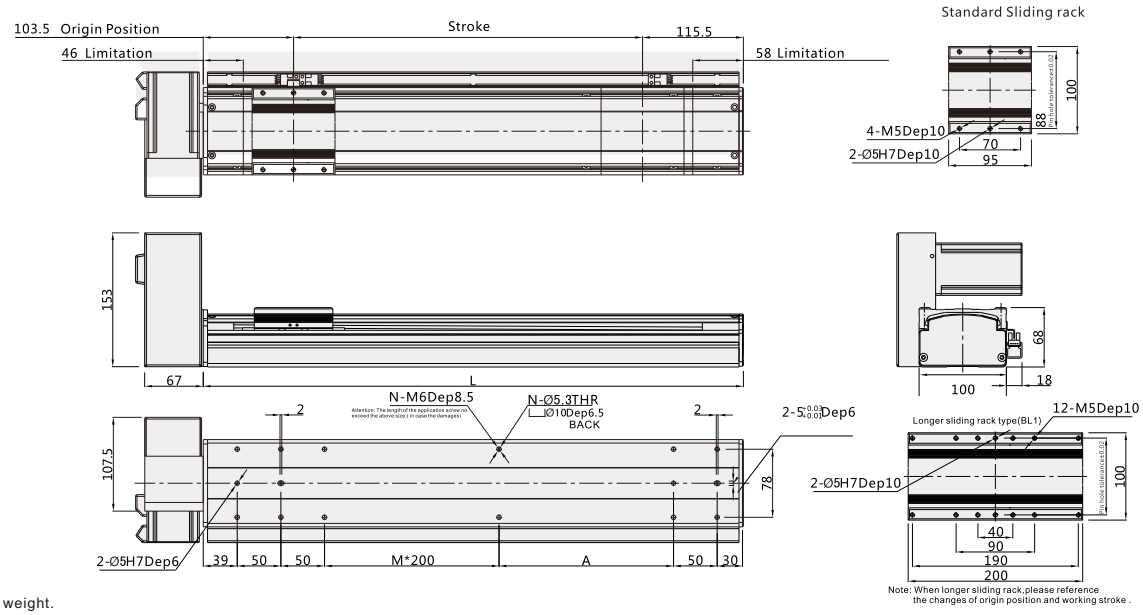

Note: Not including motor weight.

Working Stroke	100	150	200	250	300	350	400	450	500	550	600	650	700	750	800	850	900	950	1000	1050	1100	1150	1200	1250	1300	1350	1400	1450	1500
L	319	369	419	469	519	569	619	669	719	769	819	869	919	969	1019	1069	1119	1169	1219	1269	1319	1369	1419	1469	1519	1569	1619	1669	1719
M	0	0	0	1	1	1	1	2	2	2	2	3	3	3	3	4	4	4	4	5	5	5	5	6	6	6	6	7	7
N	10	10	10	12	12	12	12	14	14	14	14	16	16	16	16	18	18	18	18	20	20	20	20	22	22	22	22	24	24
A	100	150	200	50	100	150	200	50	100	150	200	50	100	150	200	50	100	150	200	50	100	150	200	50	100	150	200	50	100
Weight KG	4.5	5	5.5	6	6.5	7	7.5	8	8.5	9	9.5	10	10.5	11	11.5	12	12.5	13	13.5	14	14.5	15	15.5	16	16.5	17	17.5	18	18.5

*In case special stroke please contact technical services.

BLD: Down Left Side

Unit (mm)

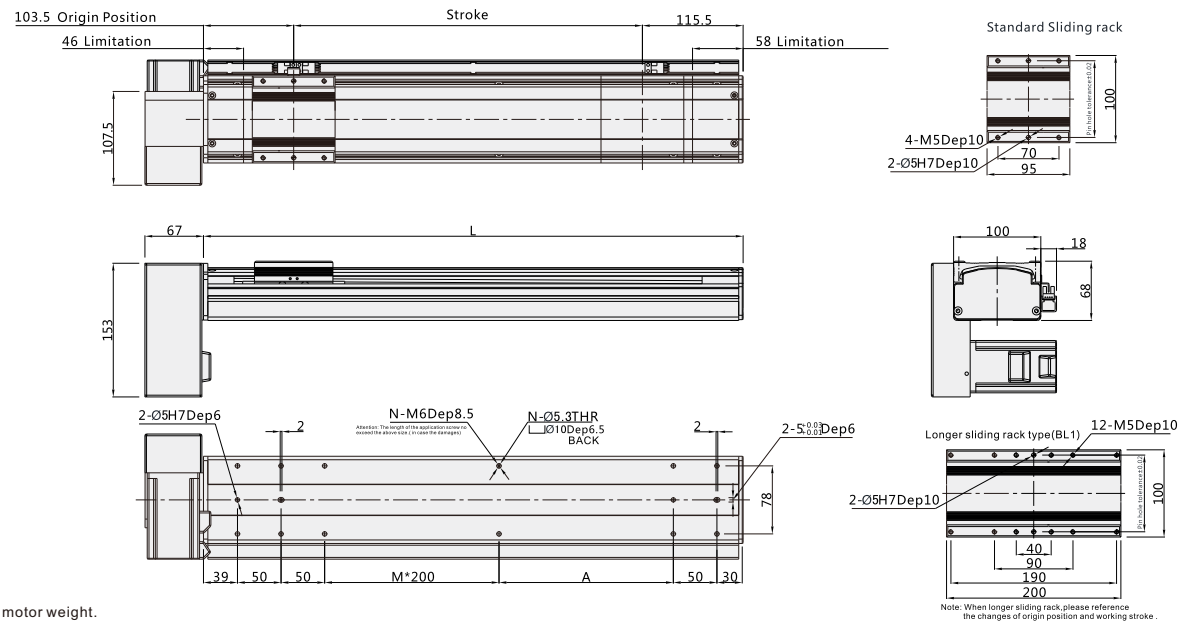

Note: Not including motor weight.

Working Stroke	100	150	200	250	300	350	400	450	500	550	600	650	700	750	800	850	900	950	1000	1050	1100	1150	1200	1250	1300	1350	1400	1450	1500
L	319	369	419	469	519	569	619	669	719	769	819	869	919	969	1019	1069	1119	1169	1219	1269	1319	1369	1419	1469	1519	1569	1619	1669	1719
M	0	0	0	1	1	1	1	2	2	2	2	3	3	3	3	4	4	4	4	5	5	5	5	6	6	6	6	7	7
N	10	10	10	12	12	12	12	14	14	14	14	16	16	16	16	18	18	18	18	20	20	20	20	22	22	22	22	24	24
A	100	150	200	50	100	150	200	50	100	150	200	50	100	150	200	50	100	150	200	50	100	150	200	50	100	150	200	50	100
Weight KG	4.5	5	5.5	6	6.5	7	7.5	8	8.5	9	9.5	10	10.5	11	11.5	12	12.5	13	13.5	14	14.5	15	15.5	16	16.5	17	17.5	18	18.5

*In case special stroke please contact technical services.

VBF12

W-ROBOT® Linear Drives

Motor direction

BL

BR

BLU

BLD

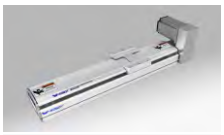
BRU

BRD

Guide for Model Selection

VBF12 — L45 — S100 — BL — ZP20B — C3 — ____

Base Style	
V	V series
BF	Semiclosed with Frame Belt Type
12	Body width120

Leather belt Type	
L	Clean belt
X	Rubber belt
Lead	
45	45mm

Stroke(mm)
100-3500

Motor way	
BR	Right Side
BRU	Upper Right Side
BRD	Down Right Side
BL	Left Side
BLU	Upper Left Side
BLD	Down Left Side

Motor Type	
P	Panasonic
M	Mitsubishi
Y	Yaskawa
T	Delta
* For Z: Motor is from clients	

Motor power	
20	200W
40	400W
57	57 Stepper
Brakes	
No	No brake
B	With brake

Original Sensor position		Sensor switch	
External		External	
C	Motor side	2	2pcs
D	Oppsite motor side	3	3pcs
E	No	No sensor	

Sensor type	
No	NPN
P	PNP

Non-standard, d.c.,	
No	Standard type
BL1	Detailed information please see page032
B2	
D01	
U01	
UD01	
H01	
HU01	
HD01	
HUD01	
M01	
S01	

VBF12

Specification

Motor power AC (W)		400W
Drive Type		Timing belt driving
Repeatability		±0.04
Lead(mm)		45
MaximumSpeed(mm/sec) 3000 Motor Speed(rpm/mim)		2250
Maximum Payload(kg)	Horizontal	30
	Vertical	
RatedThrust(N)		170
Linear Guide (mm)		15x 12.5-2
Home Sensor	Outside	EE-SX672(NPN) EE-SX672P(PNP)
	Outside Guide	EE-SX674(NPN) EE-SX674P(PNP)

Wiring drawing of inductor(original point and endpoint)

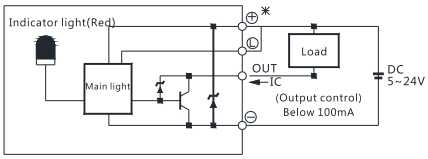

(Figure 1)

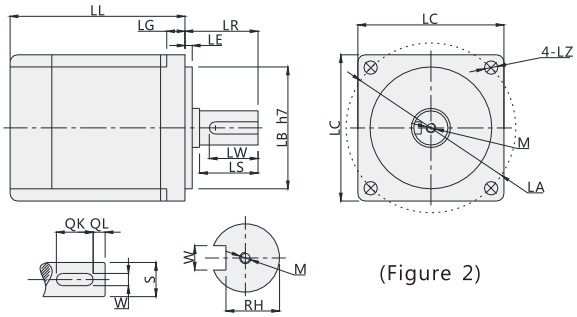

(Figure 2)

Servo Motor Matches List

(Table 1)

Servo motor size																			
Power(W)	Brand	Type		LL	LL(Brakes)	LA	LE	LZ	LC	LG	LW	RH	W	LR	S	LB	M	QK	QL
200W	Panasonic	MHMJ022G1□	V:With brake U:No brake	99	135.5	70	3	4.5	60	6.5	20	8.5	4h9	30	11h6	50h7	M4x8L	-	-
	Delta	ECMA-C20602□S	S:With brake R:No brake	105.5	141.5	70	3	5.5	60	7.5	20	11	5	30	14h6	50h7	M4x15L	-	-
	Mitsubishi	HC-KFS23□K	B:With brake □:No brake	99.5	131.5	70	3	5.8	62	7	-	-	-	30	14h6	50h7	-	-	-
400W	Panasonic	MHMJ042G1□	V:With brake U:No brake	118.5	155.5	70	3	4.5	60	6.5	20	11	5h9	30	14h6	50h7	M5x10L	-	-
	Delta	ECMA-C20604□S	S:With brake R:No brake	130.7	166.6	70	3	5.5	60	7.5	20	11	5	30	14h6	50h7	M4x15L	-	-
		ECMA-C20804□S	S:With brake R:No brake	112.3	152.8	90	3	6.6	80	8	20	11	5	35	14h6	70h7	M4x15L	-	-
	Mitsubishi	HC-KFS43□K	B:With brake □:No brake	124.5	165.5	70	3	5.8	62	7	-	-	-	30	14h6	50h7	-	-	-

□ Stand for empty

Max. Payload Diameters Table

(Unit : mm)

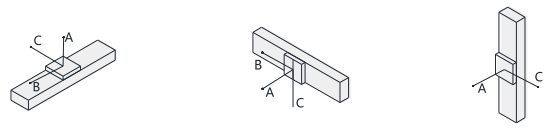

Horizontal installation	A	B	C
10kg	2700	1700	1050
20kg	2100	850	650
25kg	1700	600	500

Wall installation	A	B	C
10kg	1070	1200	2000
20kg	600	560	1500
25kg	410	350	1150

Max. Static Torque Table

(Unit : N.m)

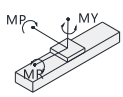

Maximum static torque	
MY	174
MP	175
MR	153

VBF12

W-ROBOT® Linear Drives

BR: Right Side

Unit (mm)

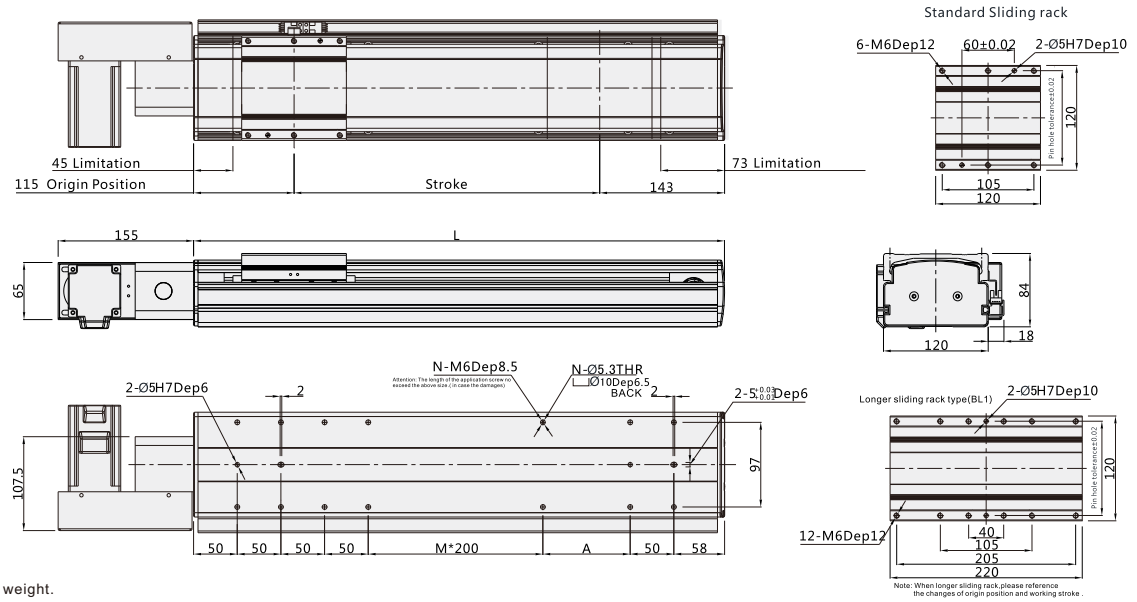

Note: Not including motor weight.

Working Stroke	100	150	200	250	300	350	400	450	500	550	600	650	700	750	800	850	900	950	1000	1050	1100	1150	1200	1250	1300	1350	1400	1450	1500
L	358	408	458	508	558	608	658	708	758	808	858	908	958	1008	1058	1108	1158	1208	1258	1308	1358	1408	1458	1508	1558	1608	1658	1708	1758
M	0	0	0	0	1	1	1	1	2	2	2	2	3	3	3	3	4	4	4	4	5	5	5	5	6	6	6	6	7
N	12	12	12	12	14	14	14	14	16	16	16	16	18	18	18	18	20	20	20	20	22	22	22	22	24	24	24	24	26
A	50	100	150	200	50	100	150	200	50	100	150	200	50	100	150	200	50	100	150	200	50	100	150	200	50	100	150	200	50
Weight KG	12.1	12.6	13.1	13.6	14.1	14.6	15.1	15.6	16.1	16.6	17.1	17.6	18.1	18.6	19.1	19.6	20.1	20.6	21.1	21.6	22.1	22.6	23.1	23.6	24.1	24.6	25.1	25.6	26.1

*In case special stroke please contact technical services.

BRU: Upper Right Side

Unit (mm)

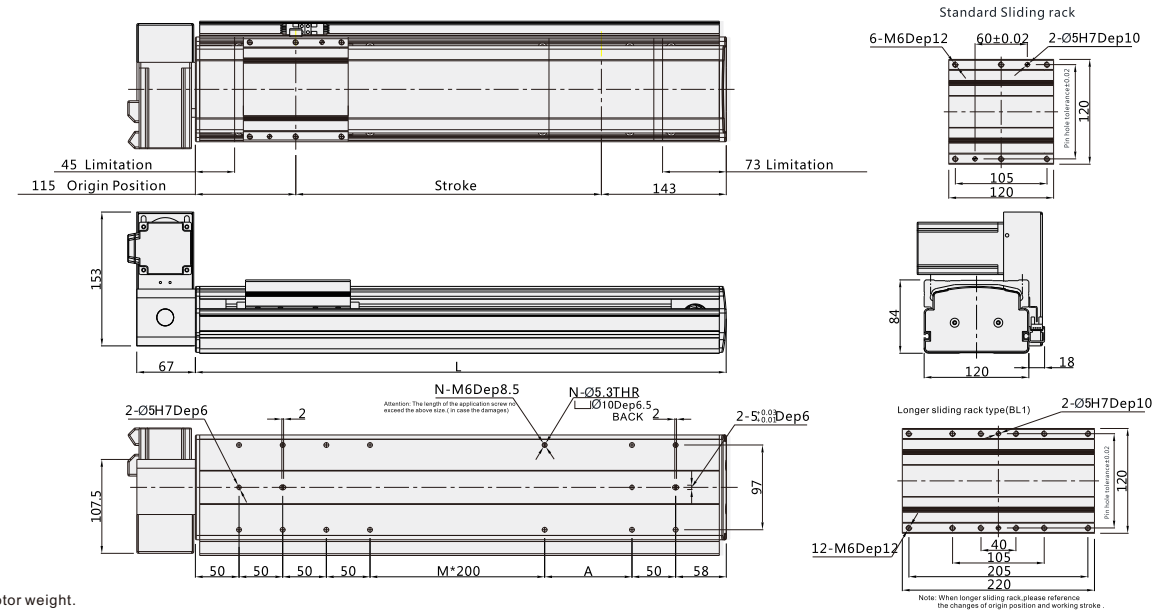

Note: Not including motor weight.

Working Stroke	100	150	200	250	300	350	400	450	500	550	600	650	700	750	800	850	900	950	1000	1050	1100	1150	1200	1250	1300	1350	1400	1450	1500
L	358	408	458	508	558	608	658	708	758	808	858	908	958	1008	1058	1108	1158	1208	1258	1308	1358	1408	1458	1508	1558	1608	1658	1708	1758
M	0	0	0	0	1	1	1	1	2	2	2	2	3	3	3	3	4	4	4	4	5	5	5	5	6	6	6	6	7
N	12	12	12	12	14	14	14	14	16	16	16	16	18	18	18	18	20	20	20	20	22	22	22	22	24	24	24	24	26
A	50	100	150	200	50	100	150	200	50	100	150	200	50	100	150	200	50	100	150	200	50	100	150	200	50	100	150	200	50
Weight KG	12.1	12.6	13.1	13.6	14.1	14.6	15.1	15.6	16.1	16.6	17.1	17.6	18.1	18.6	19.1	19.6	20.1	20.6	21.1	21.6	22.1	22.6	23.1	23.6	24.1	24.6	25.1	25.6	26.1

*In case special stroke please contact technical services.

VBF12

BRD: Down Right Side

Unit (mm)

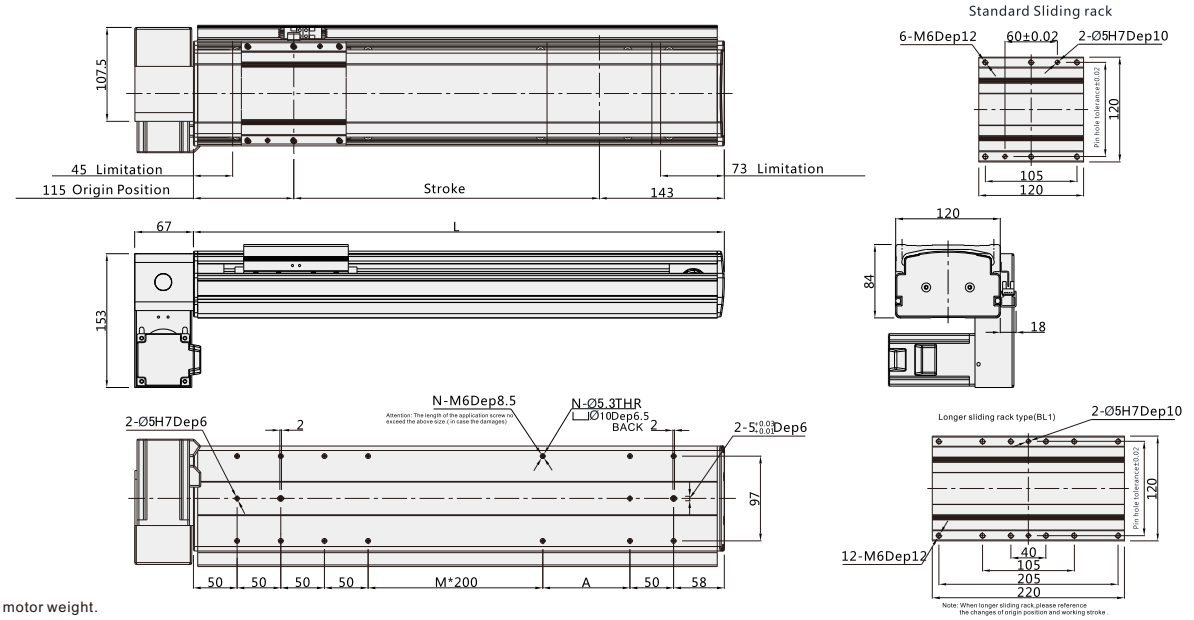

Note:Not including motor weight.

Working Stroke	100	150	200	250	300	350	400	450	500	550	600	650	700	750	800	850	900	950	1000	1050	1100	1150	1200	1250	1300	1350	1400	1450	1500
L	358	408	458	508	558	608	658	708	758	808	858	908	958	1008	1058	1108	1158	1208	1258	1308	1358	1408	1458	1508	1558	1608	1658	1708	1758
M	0	0	0	0	1	1	1	1	2	2	2	2	3	3	3	3	4	4	4	4	5	5	5	5	6	6	6	6	7
N	12	12	12	12	14	14	14	14	16	16	16	16	18	18	18	18	20	20	20	20	22	22	22	22	24	24	24	24	26
A	50	100	150	200	50	100	150	200	50	100	150	200	50	100	150	200	50	100	150	200	50	100	150	200	50	100	150	200	50
Weight KG	12.1	12.6	13.1	13.6	14.1	14.6	15.1	15.6	16.1	16.6	17.1	17.6	18.1	18.6	19.1	19.6	20.1	20.6	21.1	21.6	22.1	22.6	23.1	23.6	24.1	24.6	25.1	25.6	26.1

*In case special stroke please contact technical services.

BL: Left Side

Unit (mm)

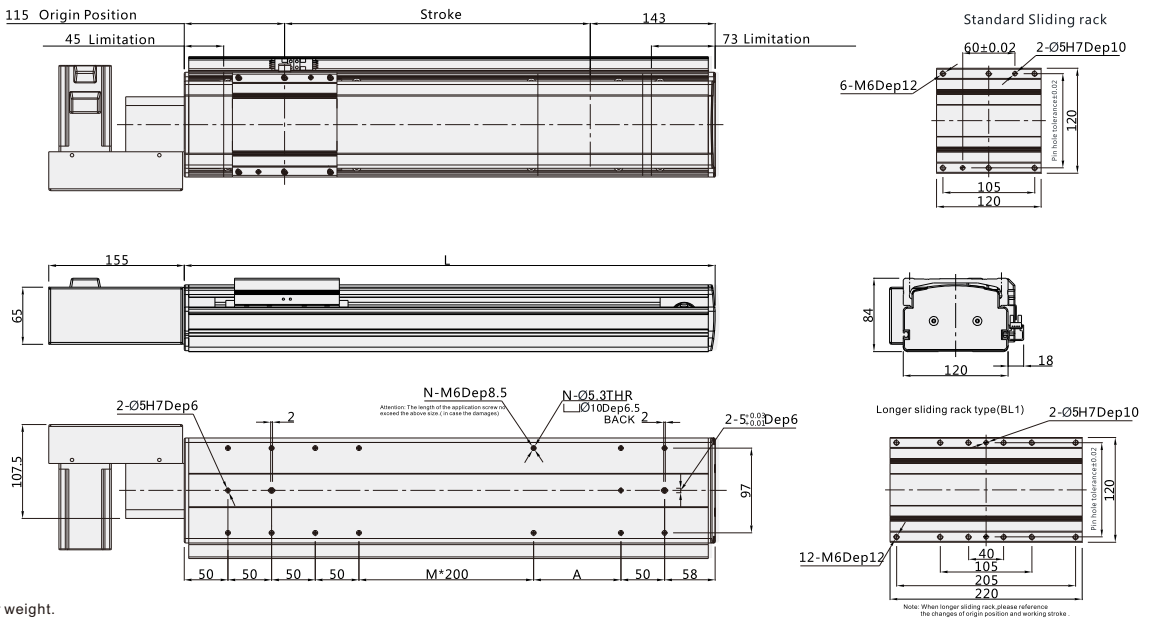

Note: Not including motor weight.

Working Stroke	100	150	200	250	300	350	400	450	500	550	600	650	700	750	800	850	900	950	1000	1050	1100	1150	1200	1250	1300	1350	1400	1450	1500
L	358	408	458	508	558	608	658	708	758	808	858	908	958	1008	1058	1108	1158	1208	1258	1308	1358	1408	1458	1508	1558	1608	1658	1708	1758
M	0	0	0	0	1	1	1	1	2	2	2	2	3	3	3	3	4	4	4	4	5	5	5	5	6	6	6	6	7
N	12	12	12	12	14	14	14	14	16	16	16	16	18	18	18	18	20	20	20	20	22	22	22	22	24	24	24	24	26
A	50	100	150	200	50	100	150	200	50	100	150	200	50	100	150	200	50	100	150	200	50	100	150	200	50	100	150	200	50
Weight KG	12.1	12.6	13.1	13.6	14.1	14.6	15.1	15.6	16.1	16.6	17.1	17.6	18.1	18.6	19.1	19.6	20.1	20.6	21.1	21.6	22.1	22.6	23.1	23.6	24.1	24.6	25.1	25.6	26.1

*In case special stroke please contact technical services.

VBF12

W-ROBOT® Linear Drives

BLU: Upper Left Side

Unit (mm)

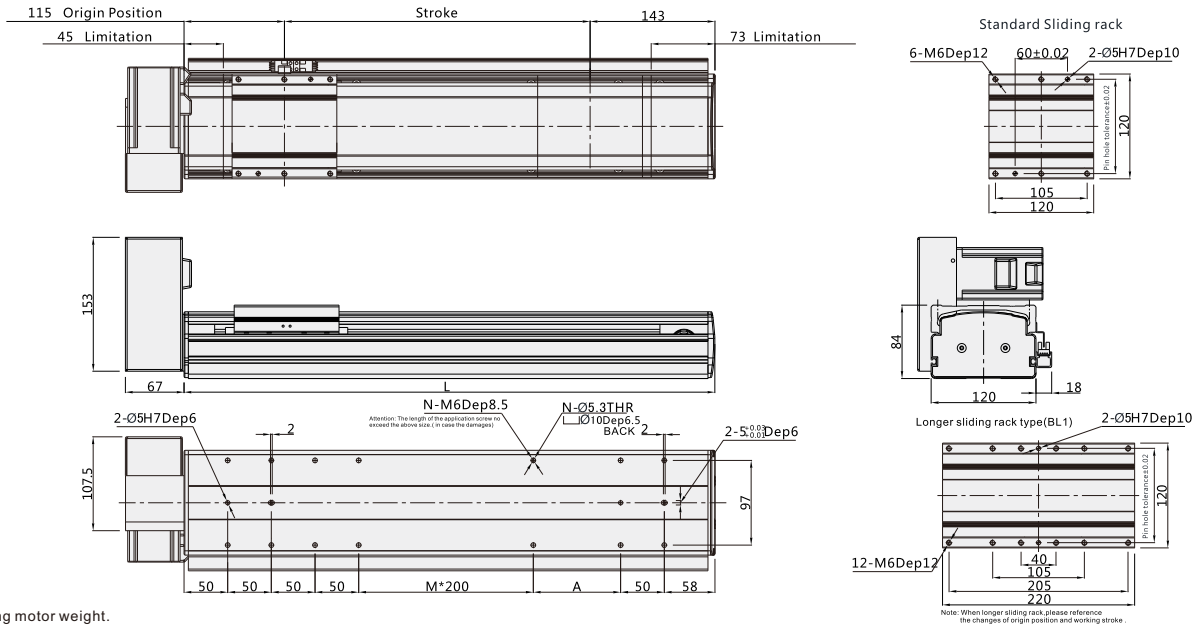

Note: Not including motor weight.

Working Stroke	100	150	200	250	300	350	400	450	500	550	600	650	700	750	800	850	900	950	1000	1050	1100	1150	1200	1250	1300	1350	1400	1450	1500
L	358	408	458	508	558	608	658	708	758	808	858	908	958	1008	1058	1108	1158	1208	1258	1308	1358	1408	1458	1508	1558	1608	1658	1708	1758
M	0	0	0	0	1	1	1	1	2	2	2	2	3	3	3	3	4	4	4	4	5	5	5	5	6	6	6	6	7
N	12	12	12	12	14	14	14	14	16	16	16	16	18	18	18	18	20	20	20	20	22	22	22	22	24	24	24	24	26
A	50	100	150	200	50	100	150	200	50	100	150	200	50	100	150	200	50	100	150	200	50	100	150	200	50	100	150	200	50
Weight KG	12.1	12.6	13.1	13.6	14.1	14.6	15.1	15.6	16.1	16.6	17.1	17.6	18.1	18.6	19.1	19.6	20.1	20.6	21.1	21.6	22.1	22.6	23.1	23.6	24.1	24.6	25.1	25.6	26.1

*In case special stroke please contact technical services.

BLD: Down Left Side

Unit (mm)

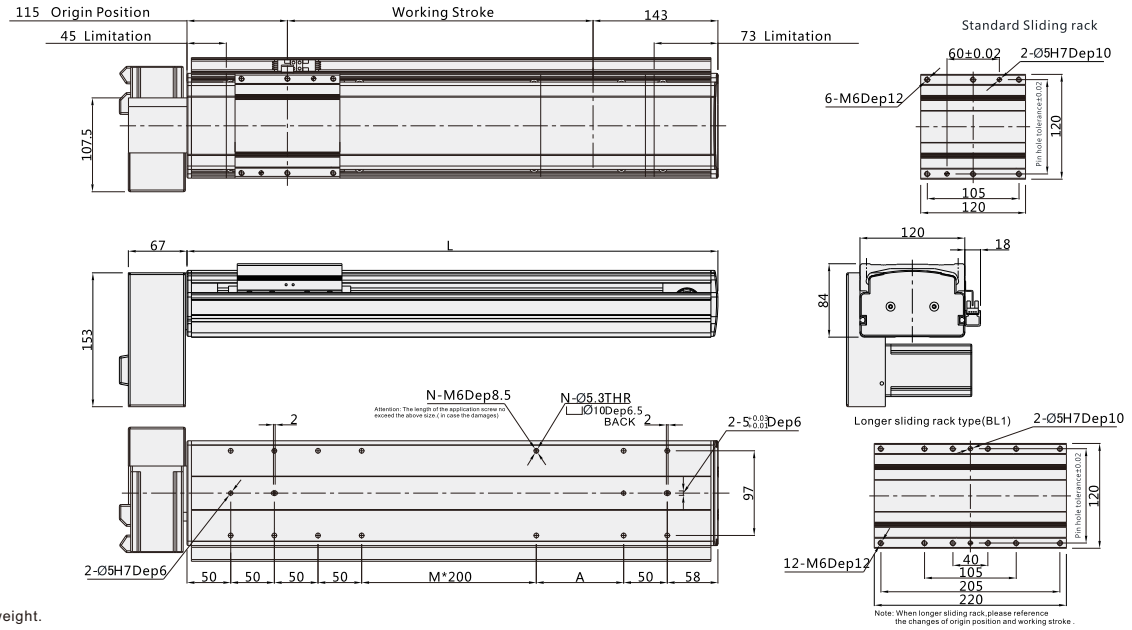

Note: Not including motor weight.

Working Stroke	100	150	200	250	300	350	400	450	500	550	600	650	700	750	800	850	900	950	1000	1050	1100	1150	1200	1250	1300	1350	1400	1450	1500
L	358	408	458	508	558	608	658	708	758	808	858	908	958	1008	1058	1108	1158	1208	1258	1308	1358	1408	1458	1508	1558	1608	1658	1708	1758
M	0	0	0	0	1	1	1	1	2	2	2	2	3	3	3	3	4	4	4	4	5	5	5	5	6	6	6	6	7
N	12	12	12	12	14	14	14	14	16	16	16	16	18	18	18	18	20	20	20	20	22	22	22	22	24	24	24	24	26
A	50	100	150	200	50	100	150	200	50	100	150	200	50	100	150	200	50	100	150	200	50	100	150	200	50	100	150	200	50
Weight KG	12.1	12.6	13.1	13.6	14.1	14.6	15.1	15.6	16.1	16.6	17.1	17.6	18.1	18.6	19.1	19.6	20.1	20.6	21.1	21.6	22.1	22.6	23.1	23.6	24.1	24.6	25.1	25.6	26.1

*In case special stroke please contact technical services.

VBF14

Motor direction

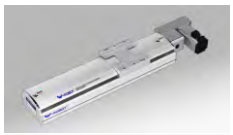
BL

BR

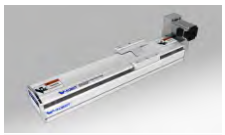
BLU

BLD

BRU

BRD

Guide for Model Selection

VBF14 — L45 — S100 — BL — ZP20B — C3 — ____

Base Style	
V	V series
BF	Semiclosed with Frame Belt Type
14	Body width140

Leather belt Type	
L	Clean belt
X	Rubber belt
Lead	
45	45mm

Stroke(mm)
100-3500

Motor way	
BR	Right Side
BRU	Upper Right Side
BRD	Down Right Side
BL	Left Side
BLU	Upper Left Side
BLD	Down Left Side

Motor Type	
P	Panasonic
M	Mitsubishi
Y	Yaskawa
T	Delta
* For Z: Motor is from clients	

Motor power	
20	200W
40	400W
57	57 Stepper
Brakes	
No	No brake
B	With brake

Original Sensor position		Sensor switch	
External		External	
C	Motor side	2	2pcs
D	Oppsite motor side	3	3pcs
E	No	No sensor	

Sensor type	
No	NPN
P	PNP

Non-standard, d.c.,	
No	Standard type
BL1	Detailed information please see page032
B2	
D01	
U01	
UD01	
H01	
HU01	
HD01	
HUD01	
M01	
S01	

VBF14

W-ROBOT® Linear Drives

Specification

Motor power AC (W)		400W
Drive Type		Timing belt driving
Repeatability		±0.04
Lead(mm)		45
MaximumSpeed(mm/sec) 3000 Motor Speed(rpm/mim)		2250
Maximum Payload(kg)	Horizontal	40
	Vertical	
RatedThrust(N)		170
Linear Guide (mm)		20x 15.5-2
Home Sensor		Outside EE-SX672(NPN) EE-SX672P(PNP)
		Outside Guide EE-SX674(NPN) EE-SX674P(PNP)

Wiring drawing of inductor(original point and endpoint)

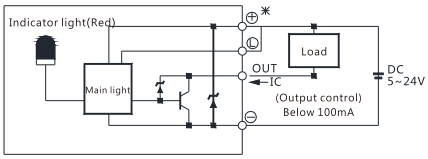

(Figure 1)

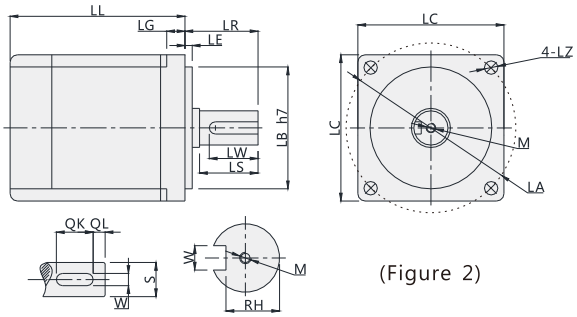

(Figure 2)

Servo Motor Matches List

(Table 1)

Servo motor size																			
Power(W)	Brand	Type		LL	LL(刹车) LL(Brakes)	LA	LE	LZ	LC	LG	LW	RH	W	LR	S	LB	M	QK	QL
200W	Panasonic	MHMJ022G1□	V:With brake U:No brake	99	135.5	70	3	4.5	60	6.5	20	8.5	4h9	30	11h6	50h7	M4x8L	-	-
	Delta	ECMA-C20602□S	S:With brake R:No brake	105.5	141.5	70	3	5.5	60	7.5	20	11	5	30	14h6	50h7	M4x15L	-	-
	Mitsubishi	HC-KFS23□K	B:With brake □:No brake	99.5	131.5	70	3	5.8	62	7	-	-	-	30	14h6	50h7	-	-	-
400W	Panasonic	MHMJ042G1□	V:With brake U:No brake	118.5	155.5	70	3	4.5	60	6.5	20	11	5h9	30	14h6	50h7	M5x10L	-	-
	Delta	ECMA-C20604□S	S:With brake R:No brake	130.7	166.6	70	3	5.5	60	7.5	20	11	5	30	14h6	50h7	M4x15L	-	-
		ECMA-C20804□S	S:With brake R:No brake	112.3	152.8	90	3	6.6	80	8	20	11	5	35	14h6	70h7	M4x15L	-	-
	Mitsubishi	HC-KFS43□K	B:With brake □:No brake	124.5	165.5	70	3	5.8	62	7	-	-	-	30	14h6	50h7	-	-	-
750W	Panasonic	MHMJ082G1□	V:With brake U:No brake	127.2	164.2	90	3	6	80	8	25	15.5	6h9	35	19h6	70h7	M5x10L	-	-
	Delta	ECMA-C20807□S	S:With brake R:No brake	138.3	178	90	3	6.6	80	8	25	15.5	6	35	19h6	70h7	M6x20L	-	-
		ECMA-C20907□S	S:With brake R:No brake	130.2	161.3	100	3	6.6	86	8	20	13	5	35	16h6	80h7	M5x15L	-	-
	Mitsubishi	HC-KFS73□K	B:With brake □:No brake	142	177.5	90	3	6.6	82	8	-	-	-	40	19h6	70h7	-	-	-

□ Stand for empty

Max. Payload Diameters Table

(Unit : mm)

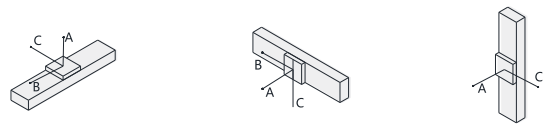

Horizontal installation	A	B	C
10kg	2800	1800	1250
20kg	2200	950	750
30kg	1800	650	550

Wall installation	A	B	C
10kg	1170	1300	2200
20kg	700	630	1600
30kg	450	380	1250

Max. Static Torque Table

(Unit : N.m)

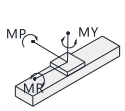

Maximum static torque	
MY	784
MP	788
MR	691

BR: Right Side

Unit (mm)

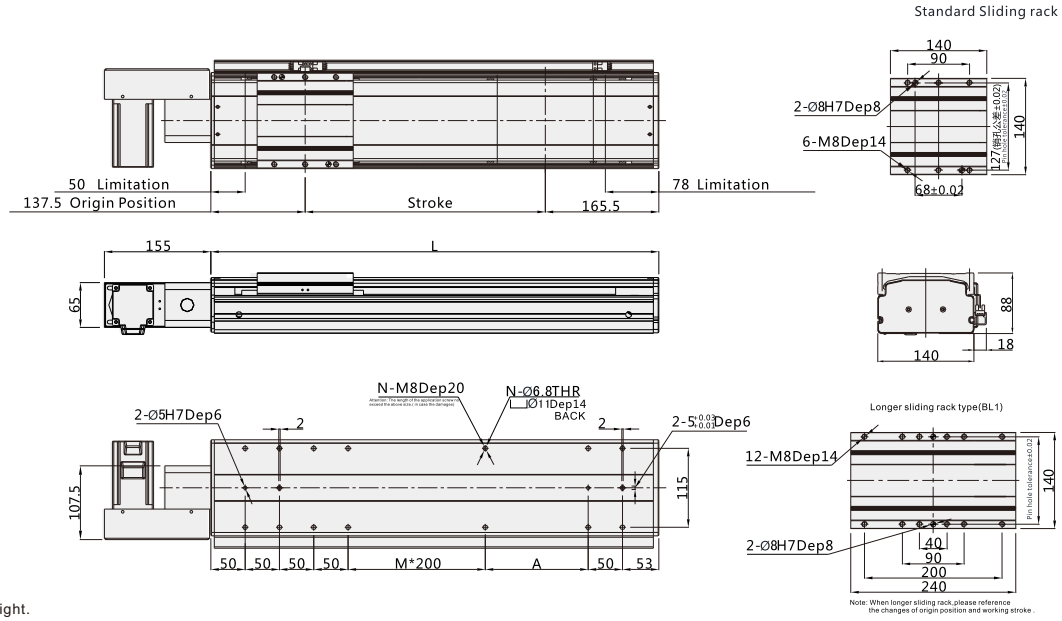

Note: Not including motor weight.

Working Stroke	100	150	200	250	300	350	400	450	500	550	600	650	700	750	800	850	900	950	1000	1050	1100	1150	1200	1250	1300	1350	1400	1450	1500
L	403	453	503	553	603	653	703	753	803	853	903	953	1003	1053	1103	1153	1203	1253	1303	1353	1403	1453	1503	1553	1603	1653	1703	1753	1803
M	0	0	0	1	1	1	1	2	2	2	2	3	3	3	3	4	4	4	4	5	5	5	5	6	6	6	6	7	7
N	12	12	12	14	14	14	14	16	16	16	16	18	18	18	18	20	20	20	20	22	22	22	22	24	24	24	24	26	26
A	100	150	200	50	100	150	200	50	100	150	200	50	100	150	200	50	100	150	200	50	100	150	200	50	100	150	200	50	100
Weight KG	17.7	18.2	18.7	19.2	19.7	20.2	20.7	21.2	21.7	22.2	22.7	23.2	23.7	24.2	24.7	25.2	25.7	26.2	26.7	27.2	27.7	28.2	28.7	29.2	29.7	30.2	30.7	31.2	31.7

*In case special stroke please contact technical services.

BRU: Upper Right Side

Unit (mm)

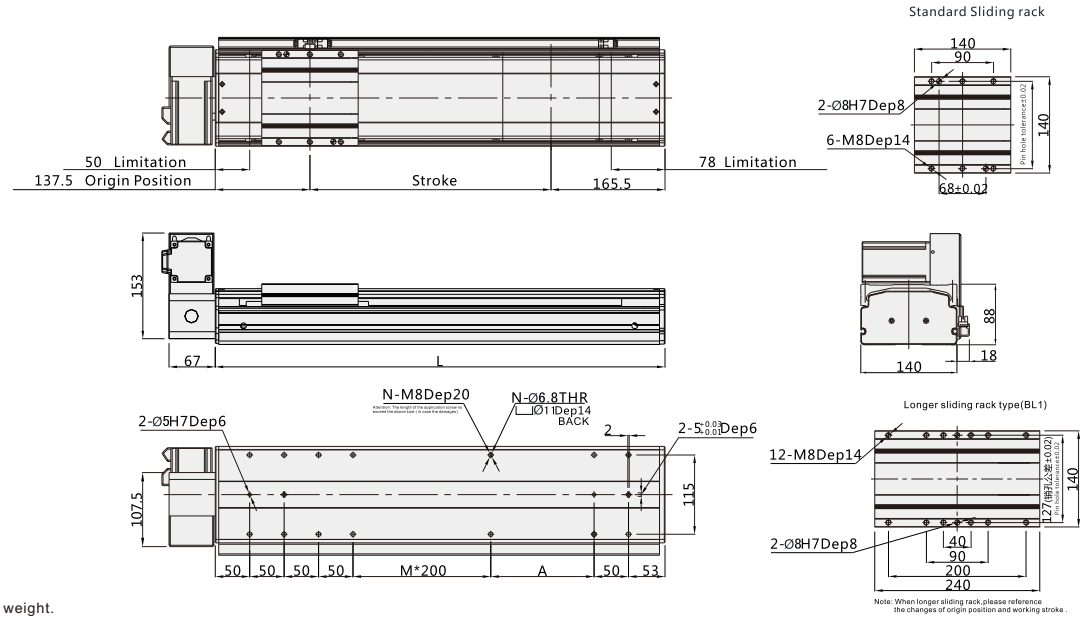

Note: Not including motor weight.

Working Stroke	100	150	200	250	300	350	400	450	500	550	600	650	700	750	800	850	900	950	1000	1050	1100	1150	1200	1250	1300	1350	1400	1450	1500
L	403	453	503	553	603	653	703	753	803	853	903	953	1003	1053	1103	1153	1203	1253	1303	1353	1403	1453	1503	1553	1603	1653	1703	1753	1803
M	0	0	0	1	1	1	1	2	2	2	2	3	3	3	3	4	4	4	4	5	5	5	5	6	6	6	6	7	7
N	12	12	12	14	14	14	14	16	16	16	16	18	18	18	18	20	20	20	20	22	22	22	22	24	24	24	24	26	26
A	100	150	200	50	100	150	200	50	100	150	200	50	100	150	200	50	100	150	200	50	100	150	200	50	100	150	200	50	100
Weight KG	17.7	18.2	18.7	19.2	19.7	20.2	20.7	21.2	21.7	22.2	22.7	23.2	23.7	24.2	24.7	25.2	25.7	26.2	26.7	27.2	27.7	28.2	28.7	29.2	29.7	30.2	30.7	31.2	31.7

*In case special stroke please contact technical services.

VBF14

V-ROBOT® Linear Drives

BRD: Down Right Side

Unit (mm)

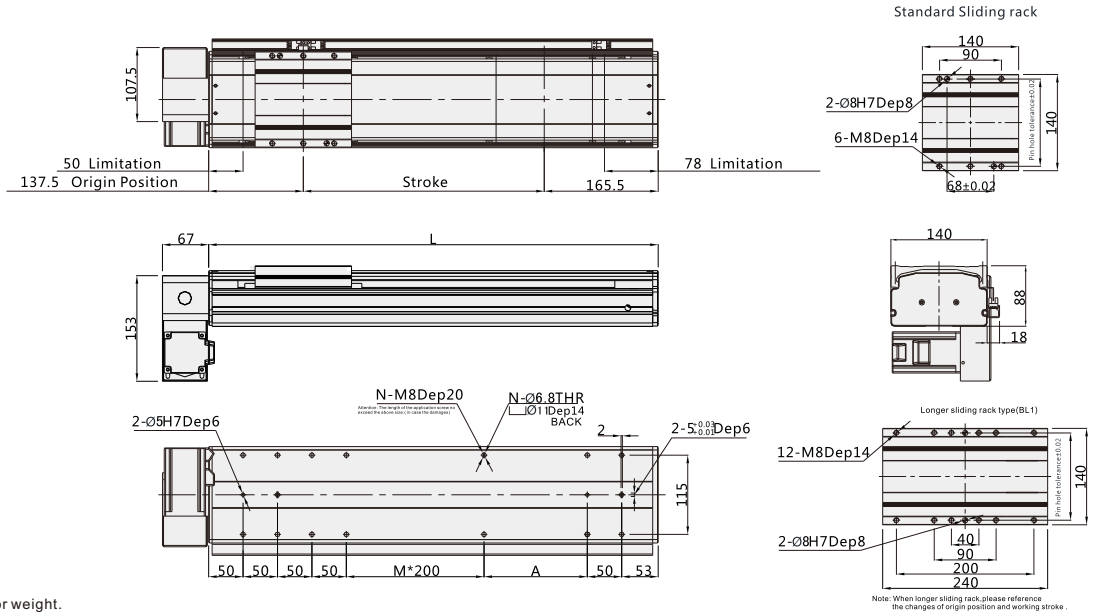

Note: Not including motor weight.

Working Stroke	100	150	200	250	300	350	400	450	500	550	600	650	700	750	800	850	900	950	1000	1050	1100	1150	1200	1250	1300	1350	1400	1450	1500
L	403	453	503	553	603	653	703	753	803	853	903	953	1003	1053	1103	1153	1203	1253	1303	1353	1403	1453	1503	1553	1603	1653	1703	1753	1803
M	0	0	0	1	1	1	1	2	2	2	2	3	3	3	3	4	4	4	4	5	5	5	5	6	6	6	6	7	7
N	12	12	12	14	14	14	14	16	16	16	16	18	18	18	18	20	20	20	20	22	22	22	22	24	24	24	24	26	26
A	100	150	200	50	100	150	200	50	100	150	200	50	100	150	200	50	100	150	200	50	100	150	200	50	100	150	200	50	100
Weight KG	17.7	18.2	18.7	19.2	19.7	20.2	20.7	21.2	21.7	22.2	22.7	23.2	23.7	24.2	24.7	25.2	25.7	26.2	26.7	27.2	27.7	28.2	28.7	29.2	29.7	30.2	30.7	31.2	31.7

*In case special stroke please contact technical services.

BL: Left Side

Unit (mm)

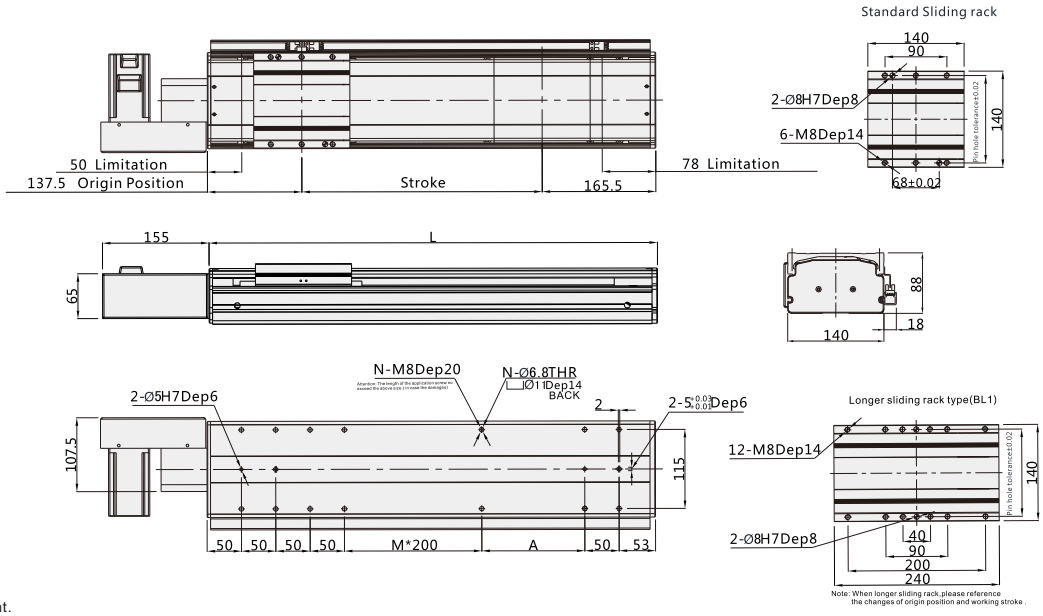

Note: Not including motor weight.

Working Stroke	100	150	200	250	300	350	400	450	500	550	600	650	700	750	800	850	900	950	1000	1050	1100	1150	1200	1250	1300	1350	1400	1450	1500
L	403	453	503	553	603	653	703	753	803	853	903	953	1003	1053	1103	1153	1203	1253	1303	1353	1403	1453	1503	1553	1603	1653	1703	1753	1803
M	0	0	0	1	1	1	1	2	2	2	2	3	3	3	3	4	4	4	4	5	5	5	5	6	6	6	6	7	7
N	12	12	12	14	14	14	14	16	16	16	16	18	18	18	18	20	20	20	20	22	22	22	22	24	24	24	24	26	26
A	100	150	200	50	100	150	200	50	100	150	200	50	100	150	200	50	100	150	200	50	100	150	200	50	100	150	200	50	100
Weight KG	17.7	18.2	18.7	19.2	19.7	20.2	20.7	21.2	21.7	22.2	22.7	23.2	23.7	24.2	24.7	25.2	25.7	26.2	26.7	27.2	27.7	28.2	28.7	29.2	29.7	30.2	30.7	31.2	31.7

*In case special stroke please contact technical services.

BLU: Upper Left Side

Unit (mm)

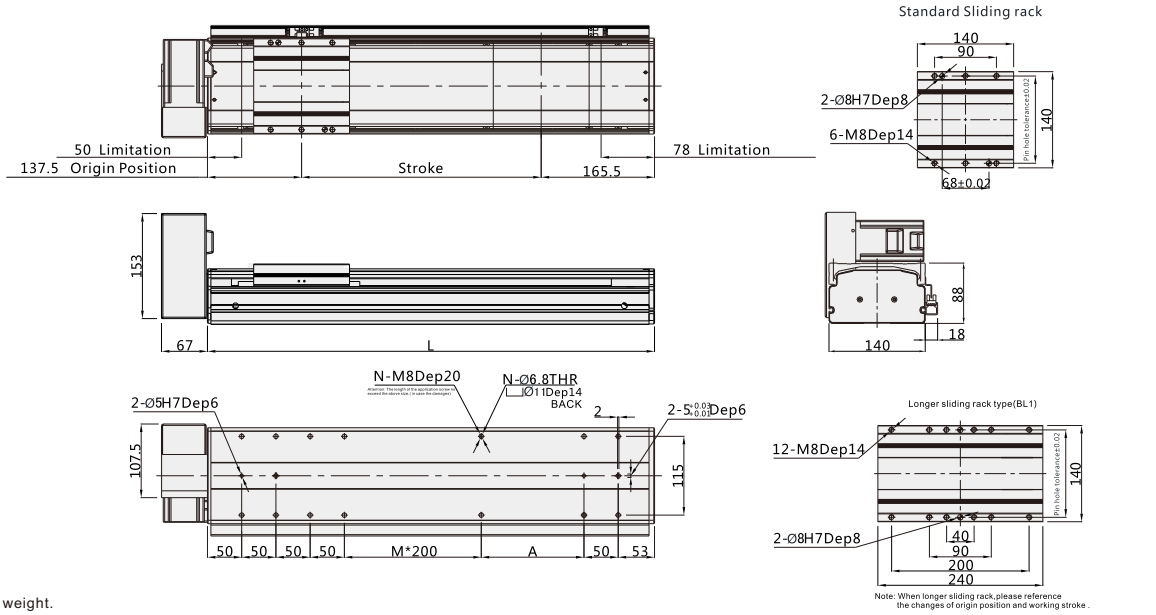

Note: Not including motor weight.

Working Stroke	100	150	200	250	300	350	400	450	500	550	600	650	700	750	800	850	900	950	1000	1050	1100	1150	1200	1250	1300	1350	1400	1450	1500
L	403	453	503	553	603	653	703	753	803	853	903	953	1003	1053	1103	1153	1203	1253	1303	1353	1403	1453	1503	1553	1603	1653	1703	1753	1803
M	0	0	0	1	1	1	1	2	2	2	2	3	3	3	3	4	4	4	4	5	5	5	5	6	6	6	6	7	7
N	12	12	12	14	14	14	14	16	16	16	16	18	18	18	18	20	20	20	20	22	22	22	22	24	24	24	24	26	26
A	100	150	200	50	100	150	200	50	100	150	200	50	100	150	200	50	100	150	200	50	100	150	200	50	100	150	200	50	100
Weight KG	17.7	18.2	18.7	19.2	19.7	20.2	20.7	21.2	21.7	22.2	22.7	23.2	23.7	24.2	24.7	25.2	25.7	26.2	26.7	27.2	27.7	28.2	28.7	29.2	29.7	30.2	30.7	31.2	31.7

*In case special stroke please contact technical services.

BLD: Down Left Side

Unit (mm)

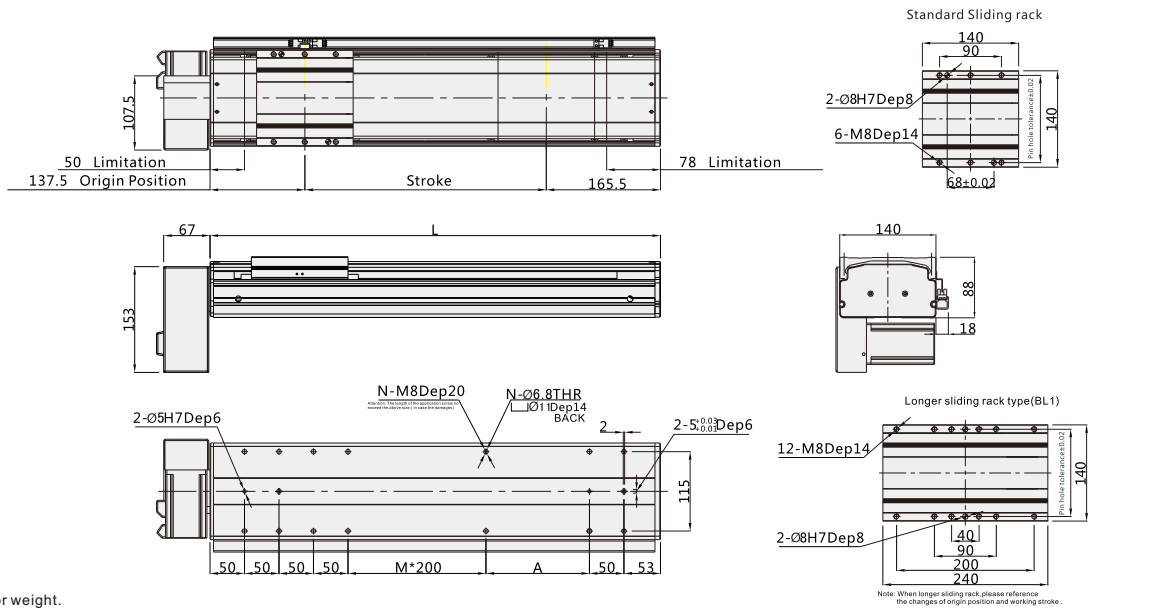

Note: Not including motor weight.

Working Stroke	100	150	200	250	300	350	400	450	500	550	600	650	700	750	800	850	900	950	1000	1050	1100	1150	1200	1250	1300	1350	1400	1450	1500
L	403	453	503	553	603	653	703	753	803	853	903	953	1003	1053	1103	1153	1203	1253	1303	1353	1403	1453	1503	1553	1603	1653	1703	1753	1803
M	0	0	0	1	1	1	1	2	2	2	2	3	3	3	3	4	4	4	4	5	5	5	5	6	6	6	6	7	7
N	12	12	12	14	14	14	14	16	16	16	16	18	18	18	18	20	20	20	20	22	22	22	22	24	24	24	24	26	26
A	100	150	200	50	100	150	200	50	100	150	200	50	100	150	200	50	100	150	200	50	100	150	200	50	100	150	200	50	100
Weight KG	17.7	18.2	18.7	19.2	19.7	20.2	20.7	21.2	21.7	22.2	22.7	23.2	23.7	24.2	24.7	25.2	25.7	26.2	26.7	27.2	27.7	28.2	28.7	29.2	29.7	30.2	30.7	31.2	31.7

*In case special stroke please contact technical services.

VBF17

W-ROBOT® Linear Drives

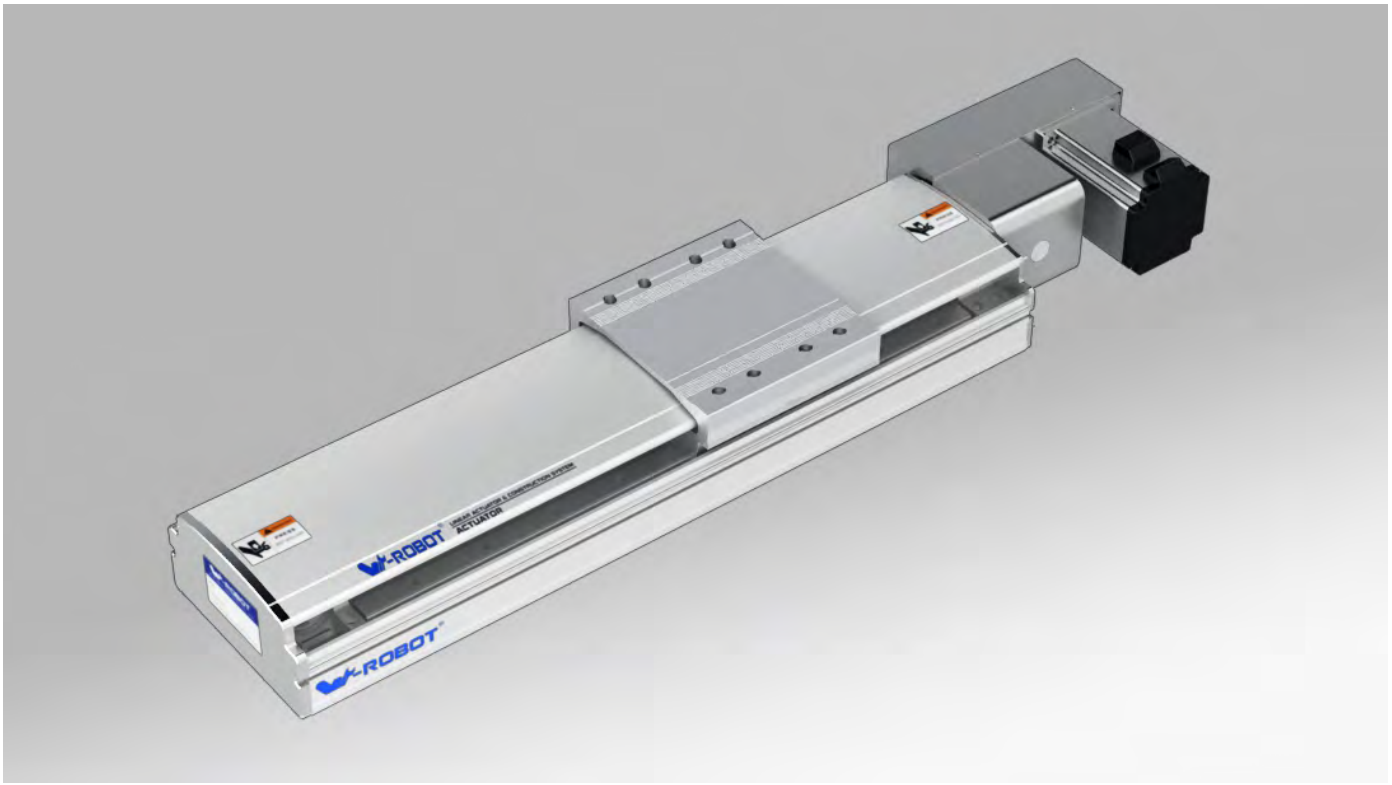

Motor direction

BL

BR

BLU

BLD

BRU

BRD

Guide for Model Selection

VBF17 — L45 — S100 — BL — ZP40B — C3 — ____

Base Style	
V	V series
BF	Semiclosed with Frame Belt Type
17	Body width170

Leather belt Type	
L	Clean belt
X	Rubber belt
Lead	
45	45mm

Stroke(mm)
100-3500

Motor way	
BR	Right Side
BRU	Upper Right Side
BRD	Down Right Side
BL	Left Side
BLU	Upper Left Side
BLD	Down Left Side

Motor Type		Motor power	
P	Panasonic	40	400W
M	Mitsubishi	75	750W
Y	Yaskawa	Brakes	
T	Delta	No	No brake
* For Z: Motor is from clients		B	With brake

Original Sensor position		Sensor switch	
External		External	
C	Motor side	2	2pcs
D	Oppsite motor side	3	3pcs
E	No	No sensor	

Sensor type	
No	NPN
P	PNP

Non-standard, d.c.,	
No	Standard type
BL1	Detailed information please see page 032
B2	
D01	
U01	
UD01	
H01	
HU01	
HD01	
HUD01	
M01	
S01	

Specification

Motor power AC (W)		400W/750W
Drive Type		Timing belt driving
Repeatability		±0.04
Lead(mm)		45
MaximumSpeed(mm/sec) 3000 Motor Speed(rpm/mim)		2250
Maximum Payload(kg)	Horizontal	45/55
	Vertical	
RatedThrust(N)		165/310
Linear Guide (mm)		20x 15.5-2
Home Sensor		Outside EE-SX672(NPN) EE-SX672P(PNP)
		Outside Guide EE-SX674(NPN) EE-SX674P(PNP)

Wiring drawing of inductor(original point and endpoint)

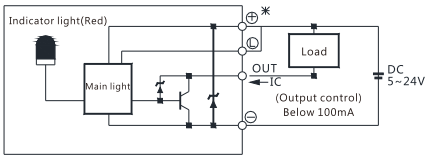

(Figure 1)

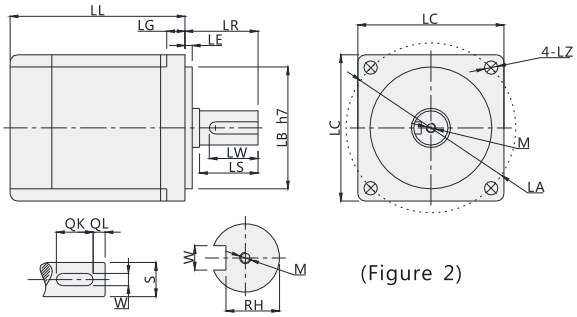

(Figure 2)

Servo Motor Matches List

(Table 1)

Servo motor size																			
Power(W)	Brand	Type		LL	LL(Brakes)	LA	LE	LZ	LC	LG	LW	RH	W	LR	S	LB	M	QK	QL
200W	Panasonic	MHMJ022G1□	V:With brake U:No brake	99	135.5	70	3	4.5	60	6.5	20	8.5	4h9	30	11h6	50h7	M4x8L	-	-
	Delta	ECMA-C20602□S	S:With brake R:No brake	105.5	141.5	70	3	5.5	60	7.5	20	11	5	30	14h6	50h7	M4x15L	-	-
	Mitsubishi	HC-KFS23□K	B:With brake □:No brake	99.5	131.5	70	3	5.8	62	7	-	-	-	30	14h6	50h7	-	-	-
400W	Panasonic	MHMJ042G1□	V:With brake U:No brake	118.5	155.5	70	3	4.5	60	6.5	20	11	5h9	30	14h6	50h7	M5x10L	-	-
	Delta	ECMA-C20604□S	S:With brake R:No brake	130.7	166.6	70	3	5.5	60	7.5	20	11	5	30	14h6	50h7	M4x15L	-	-
		ECMA-C20804□S	S:With brake R:No brake	112.3	152.8	90	3	6.6	80	8	20	11	5	35	14h6	70h7	M4x15L	-	-
	Mitsubishi	HC-KFS43□K	B:With brake □:No brake	124.5	165.5	70	3	5.8	62	7	-	-	-	30	14h6	50h7	-	-	-
750W	Panasonic	MHMJ082G1□	V:With brake U:No brake	127.2	164.2	90	3	6	80	8	25	15.5	6h9	35	19h6	70h7	M5x10L	-	-
	Delta	ECMA-C20807□S	S:With brake R:No brake	138.3	178	90	3	6.6	80	8	25	15.5	6	35	19h6	70h7	M6x20L	-	-
		ECMA-C20907□S	S:With brake R:No brake	130.2	161.3	100	3	6.6	86	8	20	13	5	35	16h6	80h7	M5x15L	-	-
	Mitsubishi	HC-KFS73□K	B:With brake □:No brake	142	177.5	90	3	6.6	82	8	-	-	-	40	19h6	70h7	-	-	-

□ Stand for empty

Max. Payload Diameters Table

(Unit : mm)

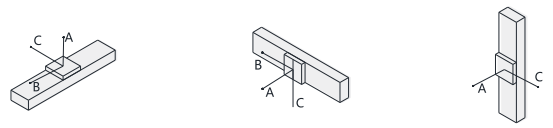

Horizontal installation	A	B	C
10kg	3000	1900	1300
20kg	2300	1000	800
30kg	2000	700	600
45kg	900	320	290

Wall installation	A	B	C
10kg	1300	1500	2300
20kg	800	700	1750
30kg	600	450	1350
45kg	290	210	610

Max. Static Torque Table

(Unit : N.m)

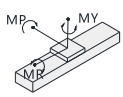

Maximum static torque	
MY	1032
MP	1034
MR	908

VBF17

W-ROBOT® Linear Drives

BR: Right Side

Unit (mm)

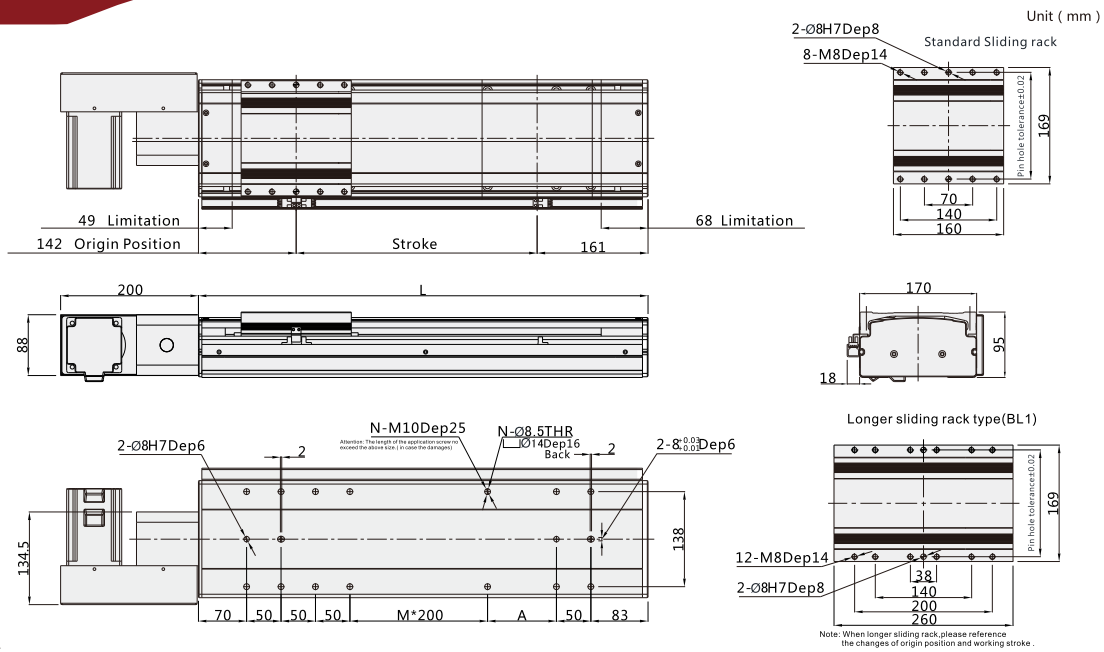

Note: Not including motor weight.

Working Stroke	100	150	200	250	300	350	400	450	500	550	600	650	700	750	800	850	900	950	1000	1050	1100	1150	1200	1250	1300	1350	1400	1450	1500
L	403	453	503	553	603	653	703	753	803	853	903	953	1003	1053	1103	1153	1203	1253	1303	1353	1403	1453	1503	1553	1603	1653	1703	1753	1803
M	0	0	0	0	1	1	1	1	2	2	2	2	3	3	3	3	4	4	4	4	5	5	5	5	6	6	6	6	7
N	12	12	12	12	14	14	14	14	16	16	16	16	18	18	18	18	20	20	20	20	22	22	22	22	24	24	24	24	26
A	50	100	150	200	50	100	150	200	50	100	150	200	50	100	150	200	50	100	150	200	50	100	150	200	50	100	150	200	50
Weight KG	17.7	18.2	18.7	19.2	19.7	20.2	20.7	21.2	21.7	22.2	22.7	23.2	23.7	24.2	24.7	25.2	25.7	26.2	26.7	27.2	27.7	28.2	28.7	29.2	29.7	30.2	30.7	31.2	31.7

*In case special stroke please contact technical services.

BRU: Upper Right Side

Unit (mm)

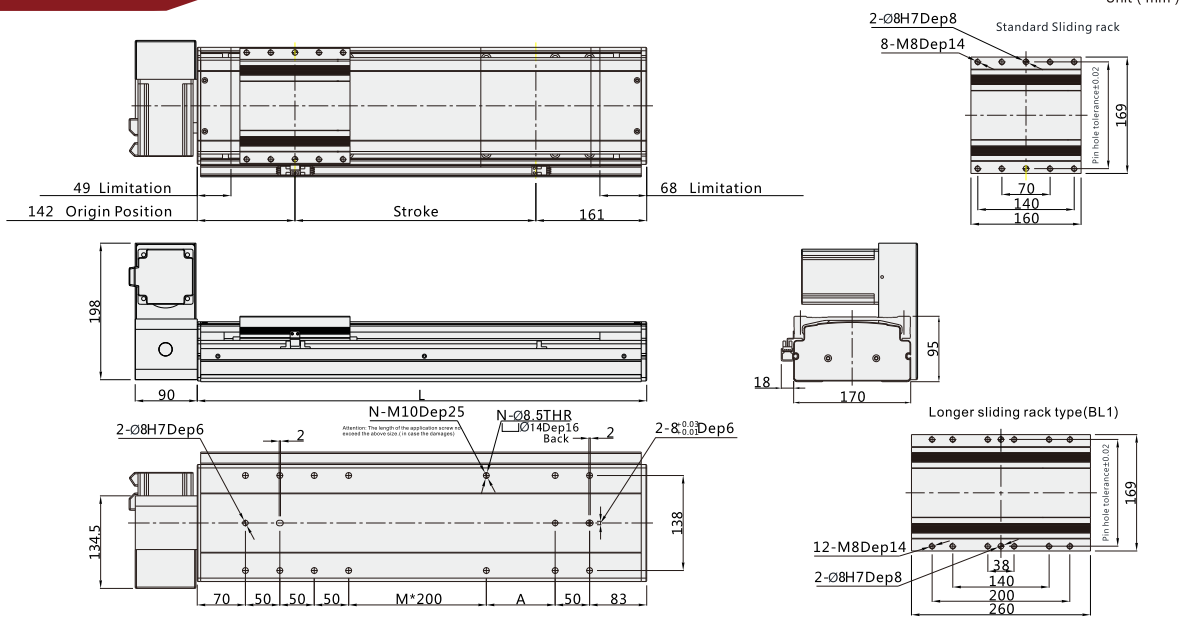

Note: Not including motor weight.

Working Stroke	100	150	200	250	300	350	400	450	500	550	600	650	700	750	800	850	900	950	1000	1050	1100	1150	1200	1250	1300	1350	1400	1450	1500
L	403	453	503	553	603	653	703	753	803	853	903	953	1003	1053	1103	1153	1203	1253	1303	1353	1403	1453	1503	1553	1603	1653	1703	1753	1803
M	0	0	0	0	1	1	1	1	2	2	2	2	3	3	3	3	4	4	4	4	5	5	5	5	6	6	6	6	7
N	12	12	12	12	14	14	14	14	16	16	16	16	18	18	18	18	20	20	20	20	22	22	22	22	24	24	24	24	26
A	50	100	150	200	50	100	150	200	50	100	150	200	50	100	150	200	50	100	150	200	50	100	150	200	50	100	150	200	50
Weight KG	17.7	18.2	18.7	19.2	19.7	20.2	20.7	21.2	21.7	22.2	22.7	23.2	23.7	24.2	24.7	25.2	25.7	26.2	26.7	27.2	27.7	28.2	28.7	29.2	29.7	30.2	30.7	31.2	31.7

*In case special stroke please contact technical services.

BRD: Down Right Side

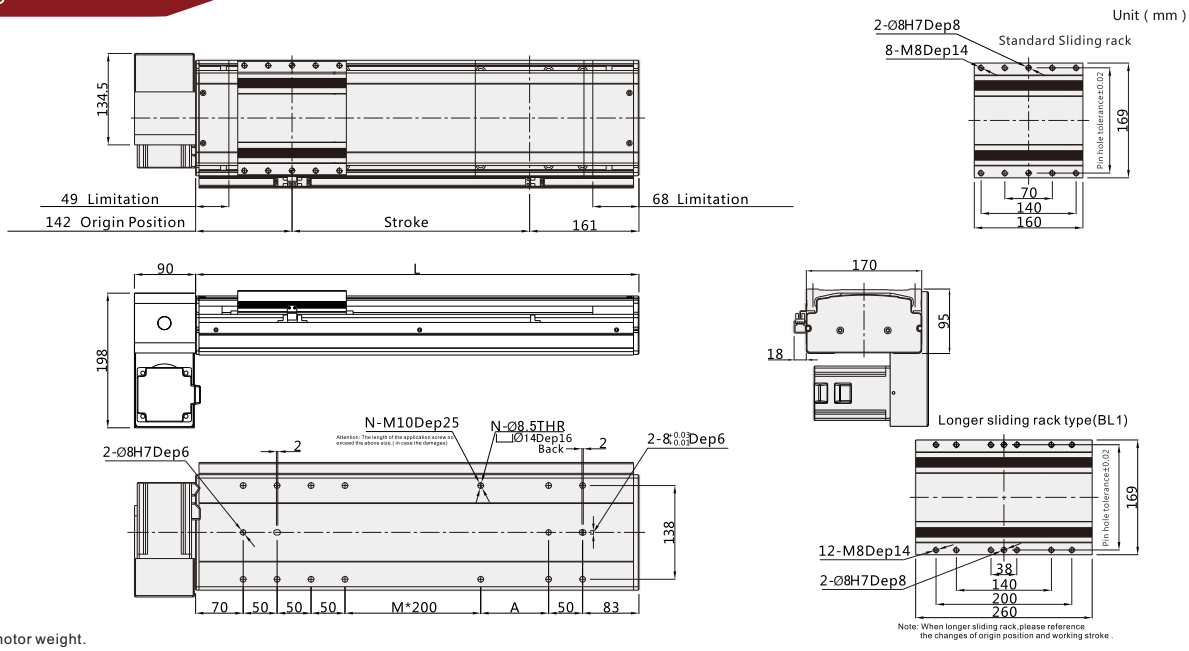

Note: Not including motor weight.

Working Stroke	100	150	200	250	300	350	400	450	500	550	600	650	700	750	800	850	900	950	1000	1050	1100	1150	1200	1250	1300	1350	1400	1450	1500
L	403	453	503	553	603	653	703	753	803	853	903	953	1003	1053	1103	1153	1203	1253	1303	1353	1403	1453	1503	1553	1603	1653	1703	1753	1803
M	0	0	0	0	1	1	1	1	2	2	2	2	3	3	3	3	4	4	4	4	5	5	5	5	6	6	6	6	7
N	12	12	12	12	14	14	14	14	16	16	16	16	18	18	18	18	20	20	20	20	22	22	22	22	24	24	24	24	26
A	50	100	150	200	50	100	150	200	50	100	150	200	50	100	150	200	50	100	150	200	50	100	150	200	50	100	150	200	50
Weight KG	17.7	18.2	18.7	19.2	19.7	20.2	20.7	21.2	21.7	22.2	22.7	23.2	23.7	24.2	24.7	25.2	25.7	26.2	26.7	27.2	27.7	28.2	28.7	29.2	29.7	30.2	30.7	31.2	31.7

*In case special stroke please contact technical services.

BL: Left Side

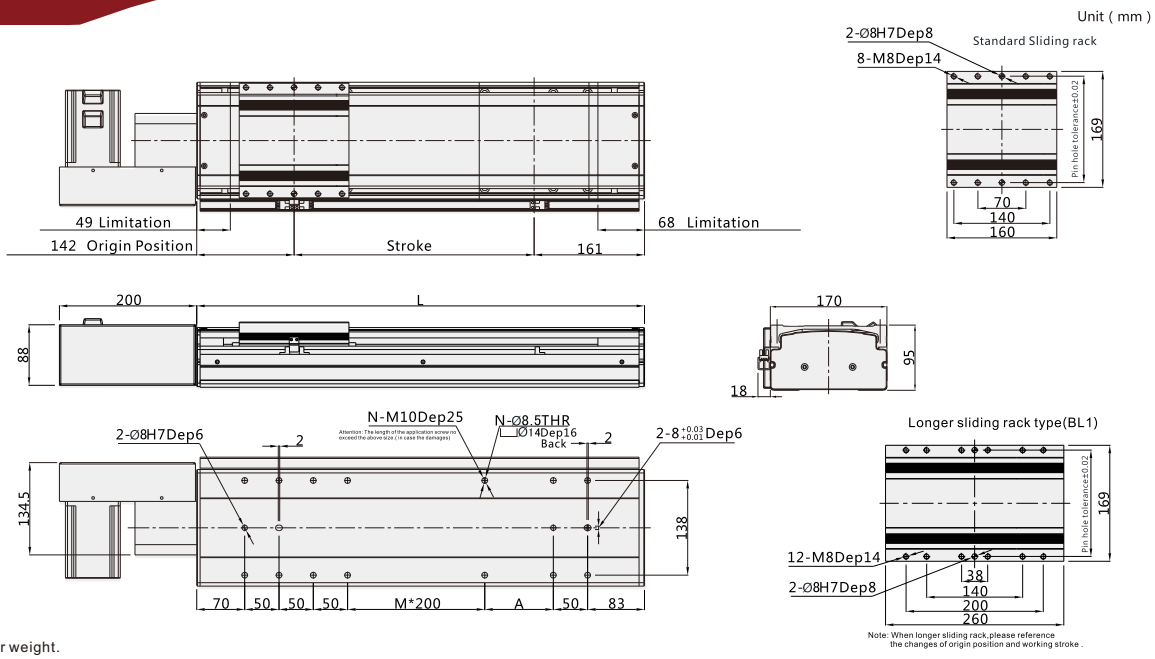

Note: Not including motor weight.

Working Stroke	100	150	200	250	300	350	400	450	500	550	600	650	700	750	800	850	900	950	1000	1050	1100	1150	1200	1250	1300	1350	1400	1450	1500
L	403	453	503	553	603	653	703	753	803	853	903	953	1003	1053	1103	1153	1203	1253	1303	1353	1403	1453	1503	1553	1603	1653	1703	1753	1803
M	0	0	0	0	1	1	1	1	2	2	2	2	3	3	3	3	4	4	4	4	5	5	5	5	6	6	6	6	7
N	12	12	12	12	14	14	14	14	16	16	16	16	18	18	18	18	20	20	20	20	22	22	22	22	24	24	24	24	26
A	50	100	150	200	50	100	150	200	50	100	150	200	50	100	150	200	50	100	150	200	50	100	150	200	50	100	150	200	50
Weight KG	17.7	18.2	18.7	19.2	19.7	20.2	20.7	21.2	21.7	22.2	22.7	23.2	23.7	24.2	24.7	25.2	25.7	26.2	26.7	27.2	27.7	28.2	28.7	29.2	29.7	30.2	30.7	31.2	31.7

*In case special stroke please contact technical services.

VBF17

W-ROBOT® Linear Drives

BLU: Upper Left Side

Unit (mm)

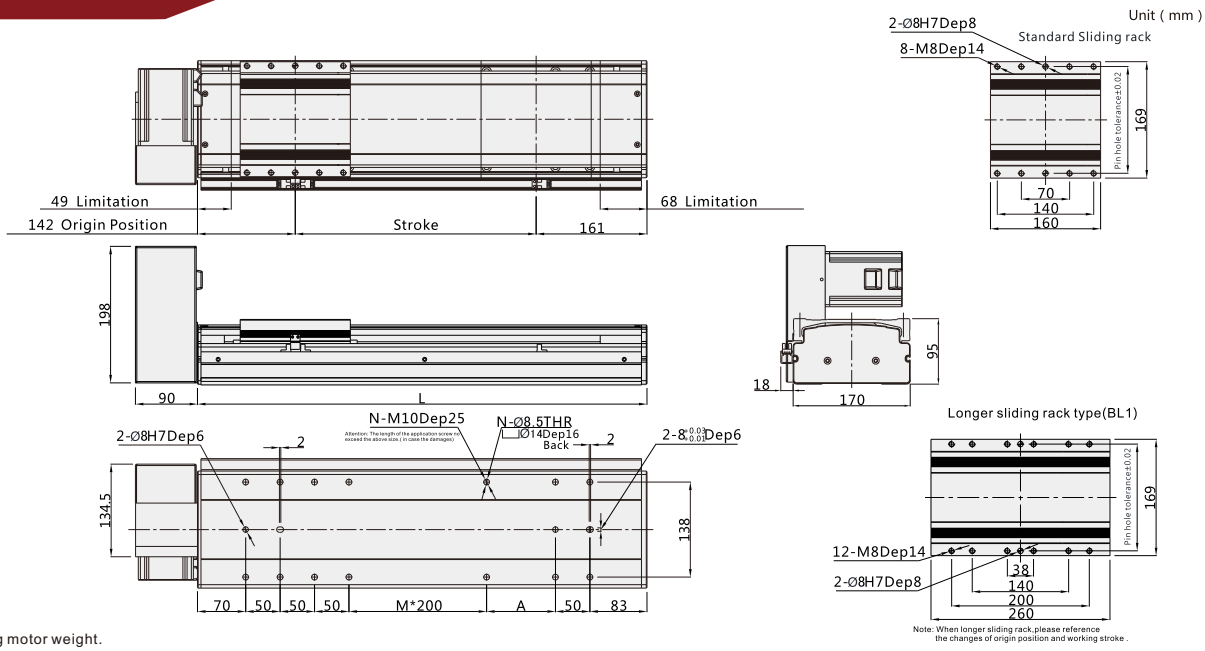

Note: Not including motor weight.

Working Stroke	100	150	200	250	300	350	400	450	500	550	600	650	700	750	800	850	900	950	1000	1050	1100	1150	1200	1250	1300	1350	1400	1450	1500
L	403	453	503	553	603	653	703	753	803	853	903	953	1003	1053	1103	1153	1203	1253	1303	1353	1403	1453	1503	1553	1603	1653	1703	1753	1803
M	0	0	0	0	1	1	1	1	2	2	2	2	3	3	3	3	4	4	4	4	5	5	5	5	6	6	6	6	7
N	12	12	12	12	14	14	14	14	16	16	16	16	18	18	18	18	20	20	20	20	22	22	22	22	24	24	24	24	26
A	50	100	150	200	50	100	150	200	50	100	150	200	50	100	150	200	50	100	150	200	50	100	150	200	50	100	150	200	50
Weight KG	17.7	18.2	18.7	19.2	19.7	20.2	20.7	21.2	21.7	22.2	22.7	23.2	23.7	24.2	24.7	25.2	25.7	26.2	26.7	27.2	27.7	28.2	28.7	29.2	29.7	30.2	30.7	31.2	31.7

*In case special stroke please contact technical services.

BLD: Down Left Side

Unit (mm)

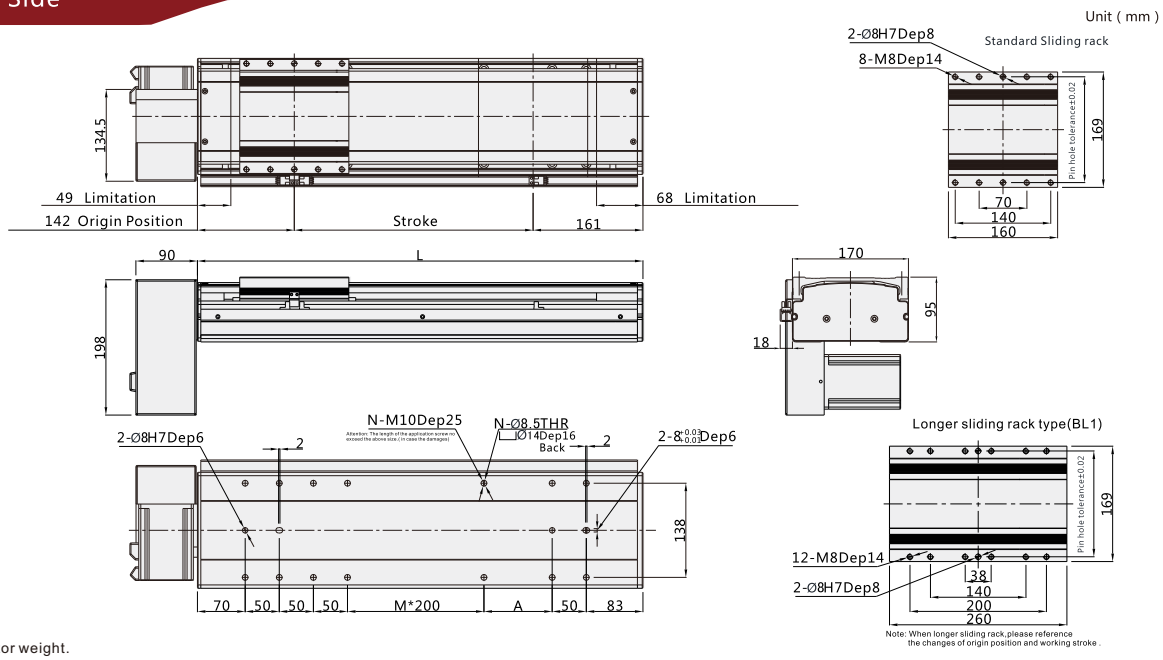

Note: Not including motor weight.

Working Stroke	100	150	200	250	300	350	400	450	500	550	600	650	700	750	800	850	900	950	1000	1050	1100	1150	1200	1250	1300	1350	1400	1450	1500
L	403	453	503	553	603	653	703	753	803	853	903	953	1003	1053	1103	1153	1203	1253	1303	1353	1403	1453	1503	1553	1603	1653	1703	1753	1803
M	0	0	0	0	1	1	1	1	2	2	2	2	3	3	3	3	4	4	4	4	5	5	5	5	6	6	6	6	7
N	12	12	12	12	14	14	14	14	16	16	16	16	18	18	18	18	20	20	20	20	22	22	22	22	24	24	24	24	26
A	50	100	150	200	50	100	150	200	50	100	150	200	50	100	150	200	50	100	150	200	50	100	150	200	50	100	150	200	50
Weight KG	17.7	18.2	18.7	19.2	19.7	20.2	20.7	21.2	21.7	22.2	22.7	23.2	23.7	24.2	24.7	25.2	25.7	26.2	26.7	27.2	27.7	28.2	28.7	29.2	29.7	30.2	30.7	31.2	31.7

*In case special stroke please contact technical services.

VBF22

Motor direction

BL

BR

BLU

BLD

BRU

BRD

Guide for Model Selection

VBF22 — L45 — S100 — BL — ZP75B — C3 — ____

Base Style	
V	Vseries
BF	Semiclosed with Frame Belt Type
22	Body width220

Leather belt Type	
L	Clean belt
X	Rubber belt
Lead	
45	45mm

Stroke(mm)
100-4000

Motor way	
BR	Right Side
BRU	Upper Right Side
BRD	Down Right Side
BL	Left Side
BLU	Upper Left Side
BLD	Down Left Side

Motor Type	
P	Panasonic
M	Mitsubishi
Y	Yaskawa
T	Delta
W	W-Robot

* For Z: Motor is from clients

Motor power	
75	750W
Brakes	
No	No brake
B	With brake

Original Sensor position	
External	
C	Motor side
D	Oppsite motor side
E	No

Sensor switch	
External	
2	2pcs
3	3pcs
No sensor	

Sensor type	
No	NPN
P	PNP

Non-standard, d.c.,	
No	Standard type
BL1	Detailed information please see page 032
B2	
D01	
U01	
UD01	
H01	
HU01	
HD01	
HUD01	
M01	
S01	

VBF22

W-ROBOT® Linear Drives

Specification

Motor power AC (W)		750W
Drive Type		Timing belt driving
Repeatability		±0.04
Lead(mm)		45
MaximumSpeed(mm/sec) 3000 Motor Speed(rpm/mim)		2250
Maximum Payload(kg)	Horizontal	85
	Vertical	
RatedThrust(N)		320
Linear Guide (mm)		23x 18-2
Home Sensor		Outside EE-SX672(NPN) EE-SX672P(PNP)
		Outside Guide EE-SX674(NPN) EE-SX674P(PNP)

Wiring drawing of inductor(original point and endpoint)

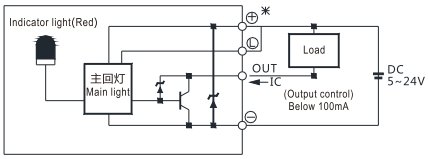

(Figure 1)

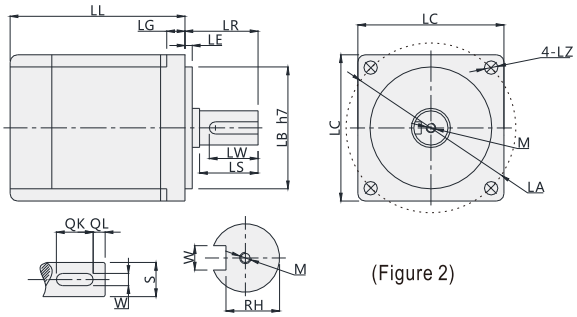

(Figure 2)

* Above repeatability is within strok 300mm,if logner travel needed,it willbe lower.In case stroke over 1000 will lead to swing of ball screw,please slow down the speed.Please note figure 2 motor size is same with table 1, or needed to replace coupler and motor holder.)

Servo Motor Matches List

(Table 1)

Servo motor size																				
Power(W)	Brand	Type		LL	LL(Brakes)	LA	LE	LZ	LC	LG	LW	RH	W	LR	S	LB	M	QK	QL
750W	Panasonic	MSMJ082G1□	V:With brake U:No brake	122	149	90	3	6	80	8	25	15.5	6h9	35	19h6	70h7	M5x10L	-	-
	Delta	ECMA-C20807□S	S:With brake R:No brake	138.3	178	90	3	6.6	80	8	25	15.5	6	35	19h6	70h7	M6x20L	-	-
		ECMA-C20907□S	S:With brake R:No brake	130.2	161.3	100	3	6.6	86	8	20	13	5	35	16h6	80h7	M5x15L	-	-
	Mitsubishi	HC-KFS73□K	B:With brake □:No brake	142	177.5	90	3	6.6	82	8	-	-	-	40	19h6	70h7	-	-	-

□ Stand for empty

Max. Payload Diameters Table

(Unit : mm)

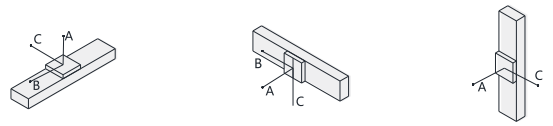

Horizontal installation	A	B	C
45kg	3444	1015	1358
65kg	2460	725	970
85kg	1800	550	740

Wall installation	A	B	C
45kg	1410	925	3435
65kg	1010	664	2455
85kg	770	500	1886

Max. Static Torque Table

(Unit : N.m)

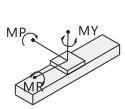

Maximum static torque	
MY	2052
MP	2052
MR	1800

BR: Right Side

Unit (mm)

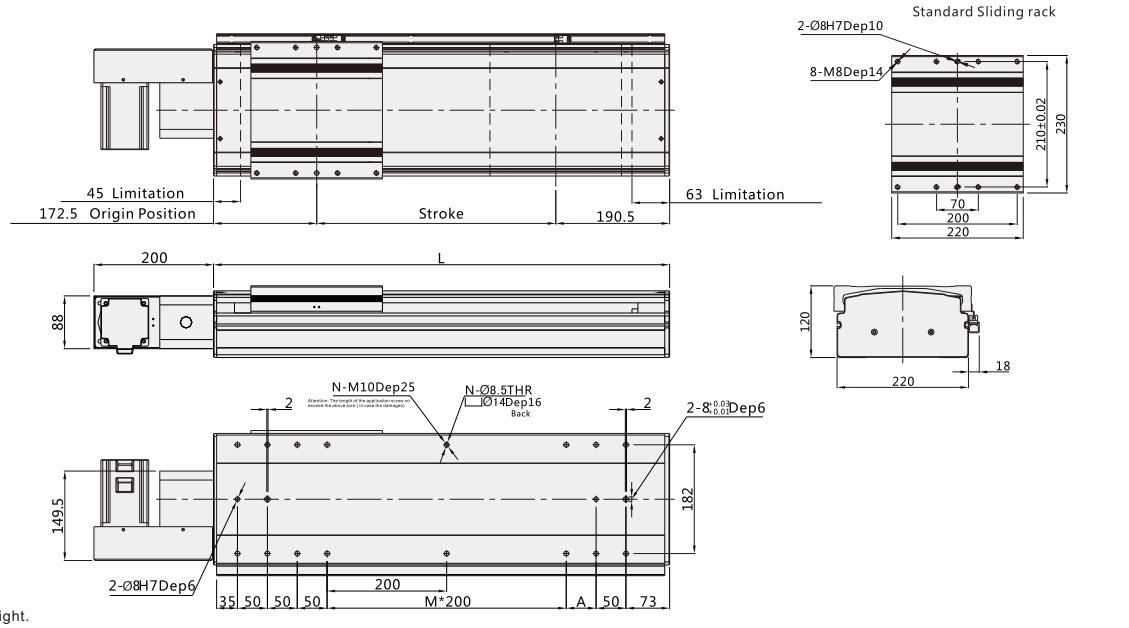

Note: Not including motor weight.

Working Stroke	100	150	200	250	300	350	400	450	500	550	600	650	700	750	800	850	900	950	1000	1050	1100	1150	1200	1250	1300	1350	1400	1450	1500
L	463	513	563	613	663	713	763	813	863	913	963	1013	1063	1113	1163	1213	1263	1313	1363	1413	1463	1513	1563	1613	1663	1713	1763	1813	1863
M	0	0	1	1	1	1	2	2	2	2	3	3	3	3	4	4	4	4	5	5	5	5	6	6	6	6	7	7	7
N	12	12	14	14	14	14	16	16	16	16	18	18	18	18	20	20	20	20	22	22	22	22	24	24	24	24	26	26	26
A	150	200	50	100	150	200	50	100	150	200	50	100	150	200	50	100	150	200	50	100	150	200	50	100	150	200	50	100	150
Weight KG	16.2	18.4	20.7	22.9	24.1	25.3	26.6	27.8	29	30.2	31.4	32.7	33.9	35.1	36.3	37.5	38.8	40	41.2	42.4	43.6	44.9	46.1	47.3	48.5	49.7	51	52.2	53.4

*In case special stroke please contact technical services.

BRU: Upper Right Side

Unit (mm)

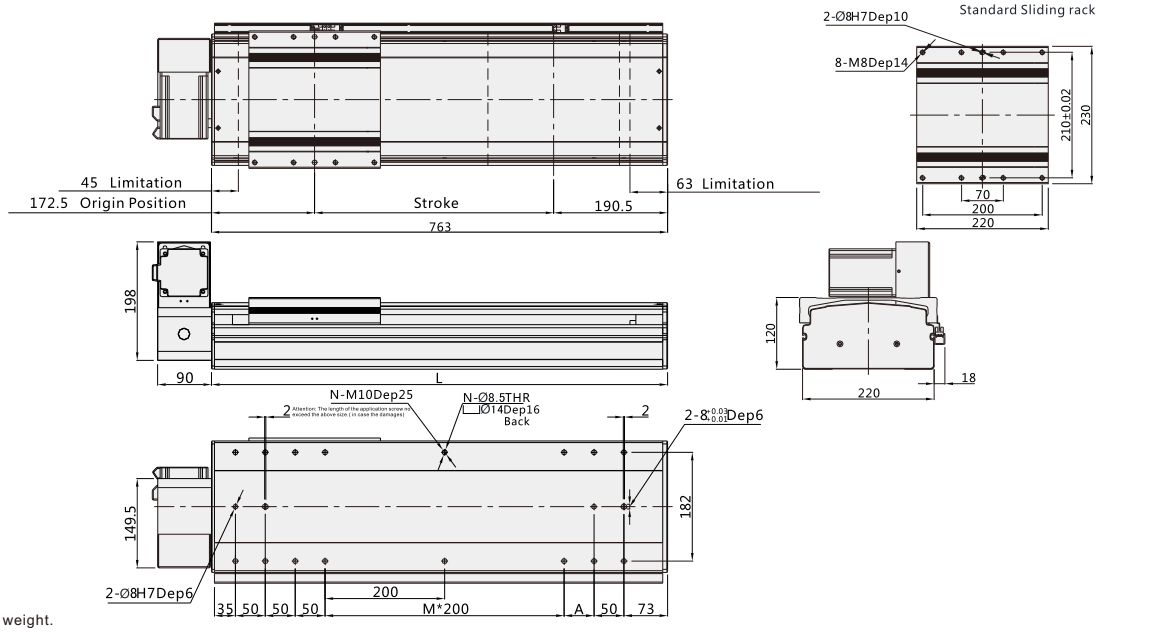

Note: Not including motor weight.

Working Stroke	100	150	200	250	300	350	400	450	500	550	600	650	700	750	800	850	900	950	1000	1050	1100	1150	1200	1250	1300	1350	1400	1450	1500
L	463	513	563	613	663	713	763	813	863	913	963	1013	1063	1113	1163	1213	1263	1313	1363	1413	1463	1513	1563	1613	1663	1713	1763	1813	1863
M	0	0	1	1	1	1	2	2	2	2	3	3	3	3	4	4	4	4	5	5	5	5	6	6	6	6	7	7	7
N	12	12	14	14	14	14	16	16	16	16	18	18	18	18	20	20	20	20	22	22	22	22	24	24	24	24	26	26	26
A	150	200	50	100	150	200	50	100	150	200	50	100	150	200	50	100	150	200	50	100	150	200	50	100	150	200	50	100	150
Weight KG	16.2	18.4	20.7	22.9	24.1	25.3	26.6	27.8	29	30.2	31.4	32.7	33.9	35.1	36.3	37.5	38.8	40	41.2	42.4	43.6	44.9	46.1	47.3	48.5	49.7	51	52.2	53.4

*In case special stroke please contact technical services.

VBF22

W-ROBOT® Linear Drives

BRD: Down Right Side

Unit (mm)

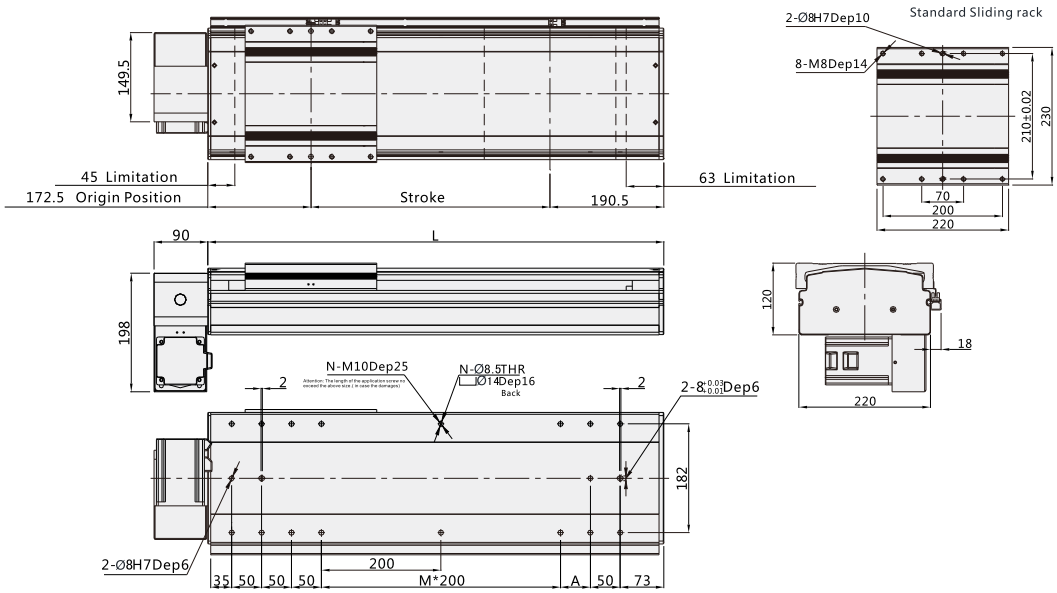

Note: Not including motor weight.

Working Stroke	100	150	200	250	300	350	400	450	500	550	600	650	700	750	800	850	900	950	1000	1050	1100	1150	1200	1250	1300	1350	1400	1450	1500
L	463	513	563	613	663	713	763	813	863	913	963	1013	1063	1113	1163	1213	1263	1313	1363	1413	1463	1513	1563	1613	1663	1713	1763	1813	1863
M	0	0	1	1	1	1	2	2	2	2	3	3	3	3	4	4	4	4	5	5	5	5	6	6	6	6	7	7	7
N	12	12	14	14	14	14	16	16	16	16	18	18	18	18	20	20	20	20	22	22	22	22	24	24	24	24	26	26	26
A	150	200	50	100	150	200	50	100	150	200	50	100	150	200	50	100	150	200	50	100	150	200	50	100	150	200	50	100	150
Weight KG	16.2	18.4	20.7	22.9	24.1	25.3	26.6	27.8	29	30.2	31.4	32.7	33.9	35.1	36.3	37.5	38.8	40	41.2	42.4	43.6	44.9	46.1	47.3	48.5	49.7	51	52.2	53.4

*In case special stroke please contact technical services.

BL: Left Side

Unit (mm)

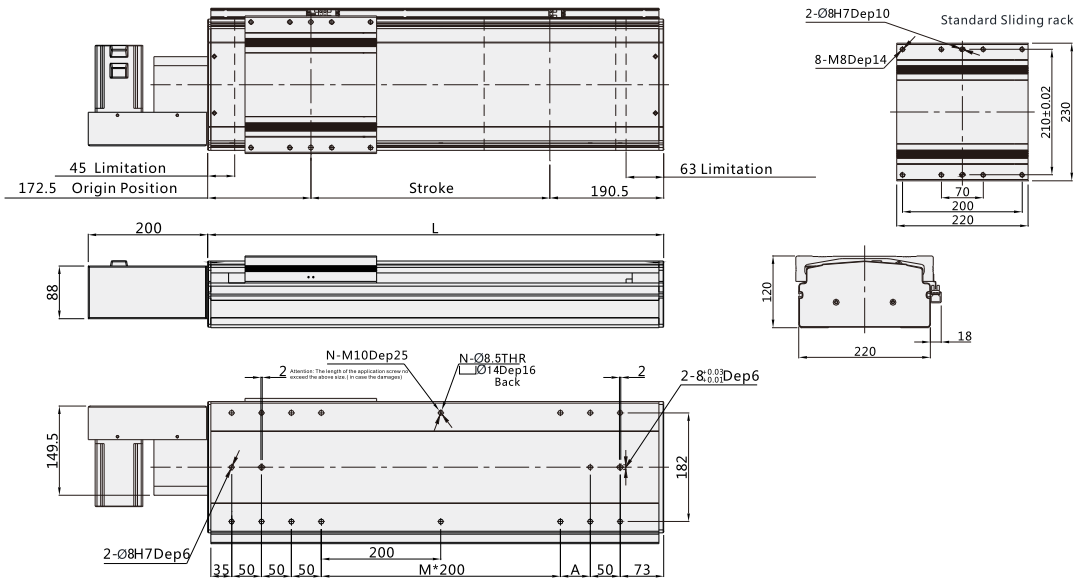

Note: Not including motor weight.

Working Stroke	100	150	200	250	300	350	400	450	500	550	600	650	700	750	800	850	900	950	1000	1050	1100	1150	1200	1250	1300	1350	1400	1450	1500
L	463	513	563	613	663	713	763	813	863	913	963	1013	1063	1113	1163	1213	1263	1313	1363	1413	1463	1513	1563	1613	1663	1713	1763	1813	1863
M	0	0	1	1	1	1	2	2	2	2	3	3	3	3	4	4	4	4	5	5	5	5	6	6	6	6	7	7	7
N	12	12	14	14	14	14	16	16	16	16	18	18	18	18	20	20	20	20	22	22	22	22	24	24	24	24	26	26	26
A	150	200	50	100	150	200	50	100	150	200	50	100	150	200	50	100	150	200	50	100	150	200	50	100	150	200	50	100	150
Weight KG	16.2	18.4	20.7	22.9	24.1	25.3	26.6	27.8	29	30.2	31.4	32.7	33.9	35.1	36.3	37.5	38.8	40	41.2	42.4	43.6	44.9	46.1	47.3	48.5	49.7	51	52.2	53.4

*In case special stroke please contact technical services.

BLU: Upper Left Side

Unit (mm)

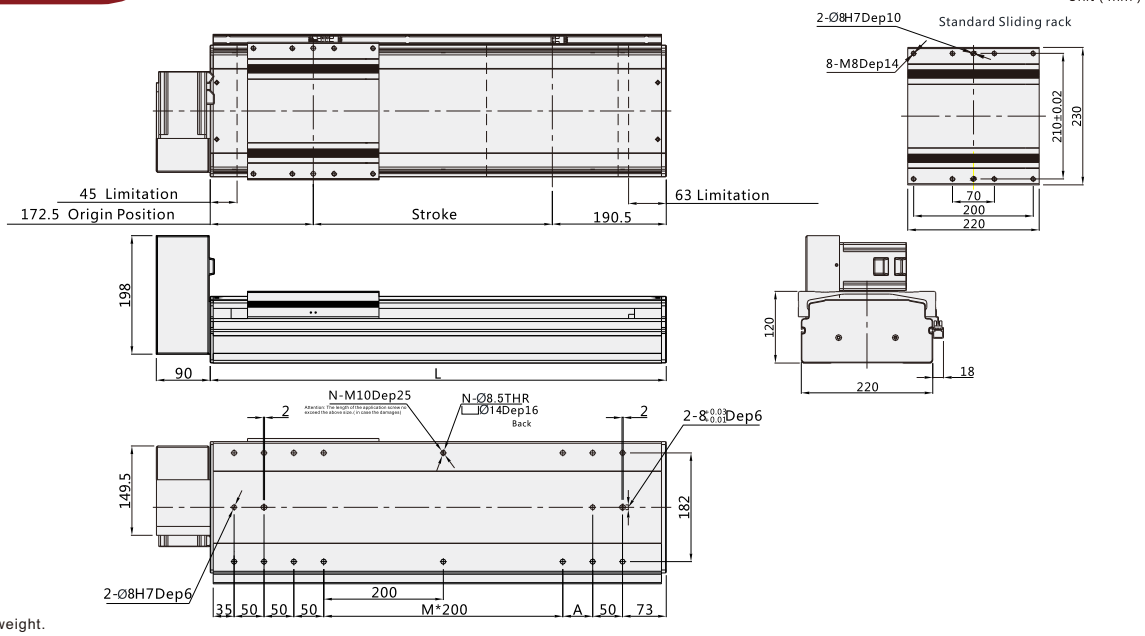

Note: Not including motor weight.

Working Stroke	100	150	200	250	300	350	400	450	500	550	600	650	700	750	800	850	900	950	1000	1050	1100	1150	1200	1250	1300	1350	1400	1450	1500
L	463	513	563	613	663	713	763	813	863	913	963	1013	1063	1113	1163	1213	1263	1313	1363	1413	1463	1513	1563	1613	1663	1713	1763	1813	1863
M	0	0	1	1	1	1	2	2	2	2	3	3	3	3	4	4	4	4	5	5	5	5	6	6	6	6	7	7	7
N	12	12	14	14	14	14	16	16	16	16	18	18	18	18	20	20	20	20	22	22	22	22	24	24	24	24	26	26	26
A	150	200	50	100	150	200	50	100	150	200	50	100	150	200	50	100	150	200	50	100	150	200	50	100	150	200	50	100	150
Weight KG	16.2	18.4	20.7	22.9	24.1	25.3	26.6	27.8	29	30.2	31.4	32.7	33.9	35.1	36.3	37.5	38.8	40	41.2	42.4	43.6	44.9	46.1	47.3	48.5	49.7	51	52.2	53.4

*In case special stroke please contact technical services.

BLD: Down Left Side

Unit (mm)

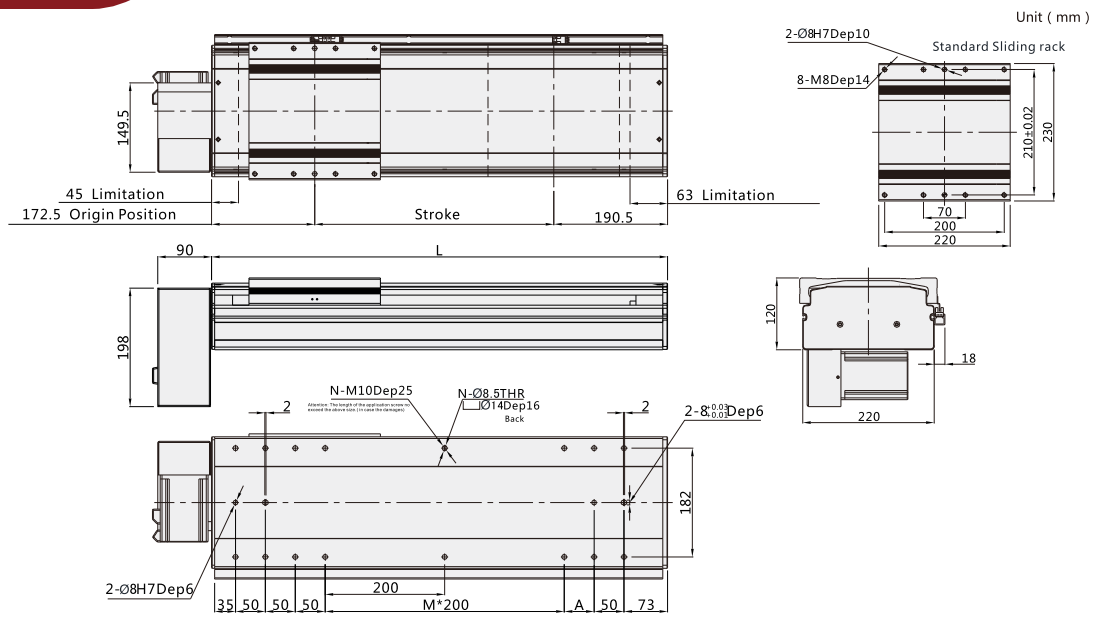

Note: Not including motor weight.

Working Stroke	100	150	200	250	300	350	400	450	500	550	600	650	700	750	800	850	900	950	1000	1050	1100	1150	1200	1250	1300	1350	1400	1450	1500
L	463	513	563	613	663	713	763	813	863	913	963	1013	1063	1113	1163	1213	1263	1313	1363	1413	1463	1513	1563	1613	1663	1713	1763	1813	1863
M	0	0	1	1	1	1	2	2	2	2	3	3	3	3	4	4	4	4	5	5	5	5	6	6	6	6	7	7	7
N	12	12	14	14	14	14	16	16	16	16	18	18	18	18	20	20	20	20	22	22	22	22	24	24	24	24	26	26	26
A	150	200	50	100	150	200	50	100	150	200	50	100	150	200	50	100	150	200	50	100	150	200	50	100	150	200	50	100	150
Weight KG	16.2	18.4	20.7	22.9	24.1	25.3	26.6	27.8	29	30.2	31.4	32.7	33.9	35.1	36.3	37.5	38.8	40	41.2	42.4	43.6	44.9	46.1	47.3	48.5	49.7	51	52.2	53.4

*In case special stroke please contact technical services.

Linear Stage Series

Timing Belt Drive
Dust-free Environment

Small Type

RBC5

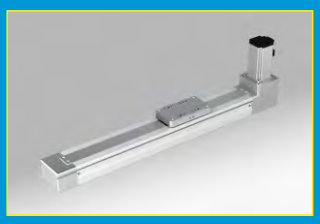

Maximum Stroke 800mm
Maximum Payload 5KG ·····142
Body Width 55mm

Small Type

RBC6

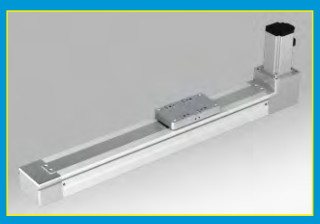

Maximum Stroke 800mm
Maximum Payload 8KG ·····145
Body Width 65mm

Standard Type

VBC10

Maximum Stroke 3000mm
Maximum Payload 25KG ····· 148
Body Width 100mm

Standard Type

VBC12

Maximum Stroke 3500mm
Maximum Payload 30KG ·····153
Body Width 120mm

VBC14

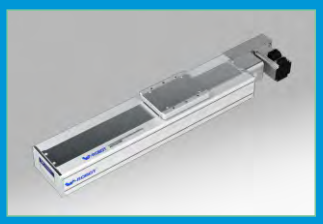

Maximum Stroke 3500mm
Maximum Payload 40KG ····· 158
Body Width 140mm

Large Type

VBC17

Long stroke

Maximum Stroke 3500mm
Maximum Payload 55KG ·····163
Body Width 170mm

RBC5

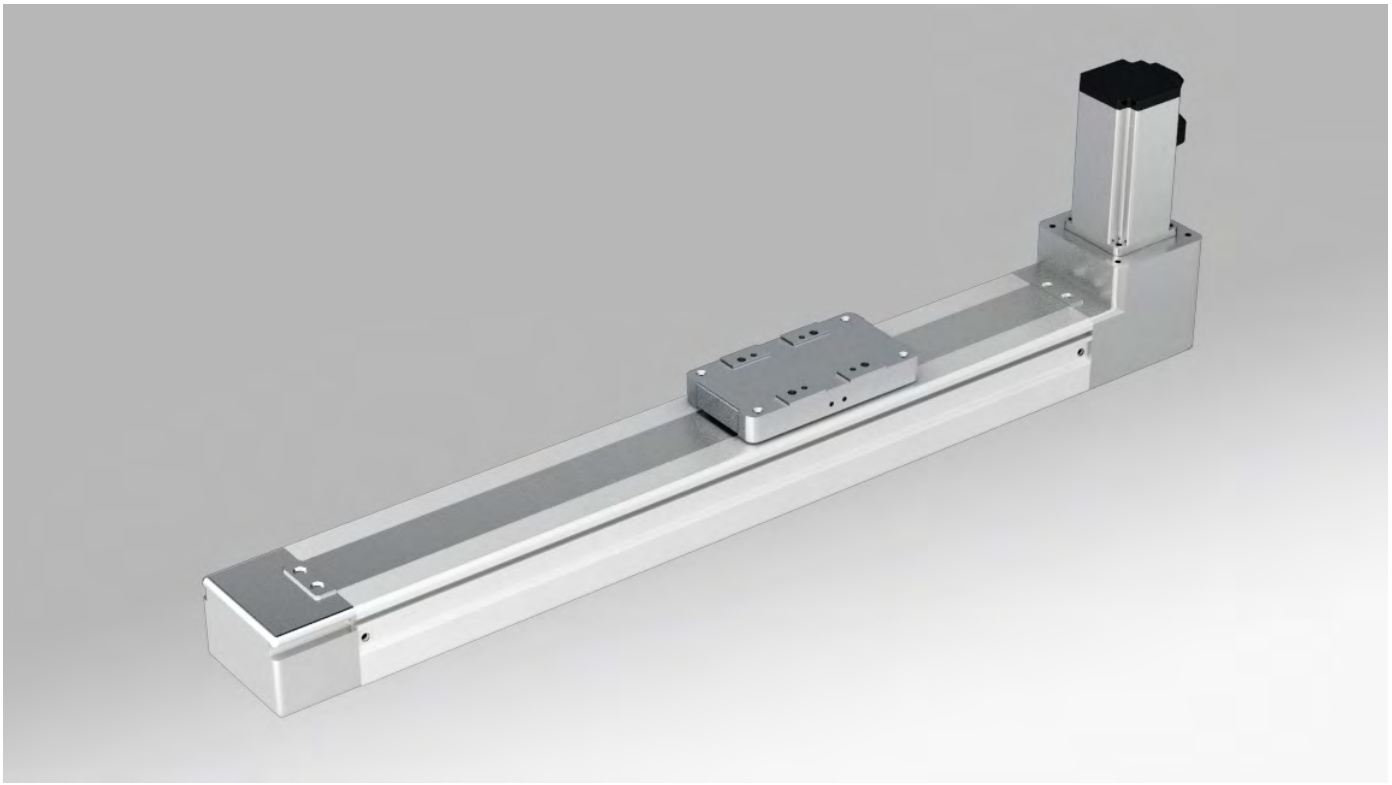

Motor direction

BU

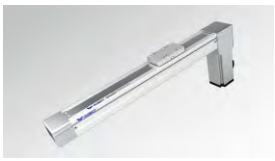

BD

Guide for Model Selection

RBC5 — L80 — S100 — BU — ZW57 — C3 — ____

Base Style	
R	R series
BC	Cleanse Belt Type
5	Body width55

Leather belt Type	
L	Clean belt
X	Rubber belt
Lead	
80	80mm

Stroke(mm)
100-800

Motor way	
BU	Upper Side
BD	Down Side

Motor Type		Motor power	
W	W-Robot	57	57-Ø8
* For Z: Motor is from clients		Brakes	
		No	No brake
		B	With brake

Original Sensor position		Sensor switch	
External		External	
C	Motor side	2	2pcs
D	Oppsite motor side	3	3pcs
E	No	No sensor	

Sensor type	
No	NPN
P	PNP

Non-standard, d.c.,	
No	Standard type
BL1	Detailed information please see page 032
B2	
D01	
U01	
UD01	
H01	
HU01	
HD01	
HUD01	
M01	
S01	

Specification

Motor power AC (W)		57 motor
Drive Type		Timing belt driving
Repeatability		±0.05
Lead(mm)		80
MaximumSpeed(mm/sec) 3000 Motor Speed(rpm/mim)		400
Maximum Payload(kg)	Horizontal	5
	Vertical	/
RatedThrust(N)		70
Linear Guide (mm)		24x8.5-1
Home Sensor	Outside	EE-SX672(NPN) EE-SX672P(PNP)
	Outside Guide	EE-SX674(NPN) EE-SX674P(PNP)

Wiring drawing of inductor(original point and endpoint)

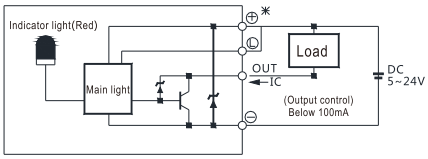

(Figure 1)

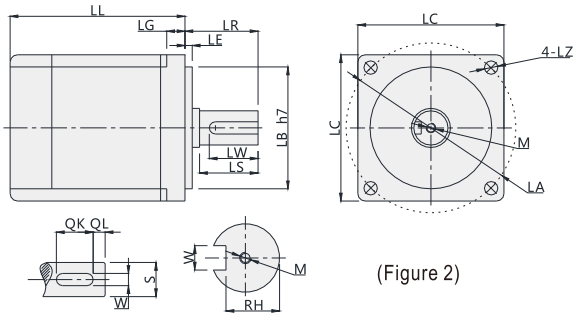

(Figure 2)

Servo Motor Matches List

(Table 1)

Servo motor size																			
Power(W)	Brand	Type		LL	LL(Brakes)	LA	LE	LZ	LC	LG	LW	RH	W	LR	S	LB	M	QK	QL
57 motor	W-ROBOT	W57S□	V:With brake U:No brake	81	97	66.67	1.6	4.5	57	4.8	15	7.2	-	21	8h6	38.1h7	-	-	-

□ Stand for empty

Max. Payload Diameters Table

(Unit : mm)

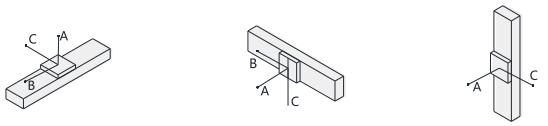

Horizontal installation	A	B	C
1kg	250	32	100
2.5kg	108	12	38

Wall installation	A	B	C
1kg	75	23	170
2.5kg	22	0	65

Max. Static Torque Table

(Unit : N.m)

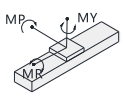

Maximum static torque	
MY	56
MP	56
MR	95

BD: Down Side

Unit (mm)

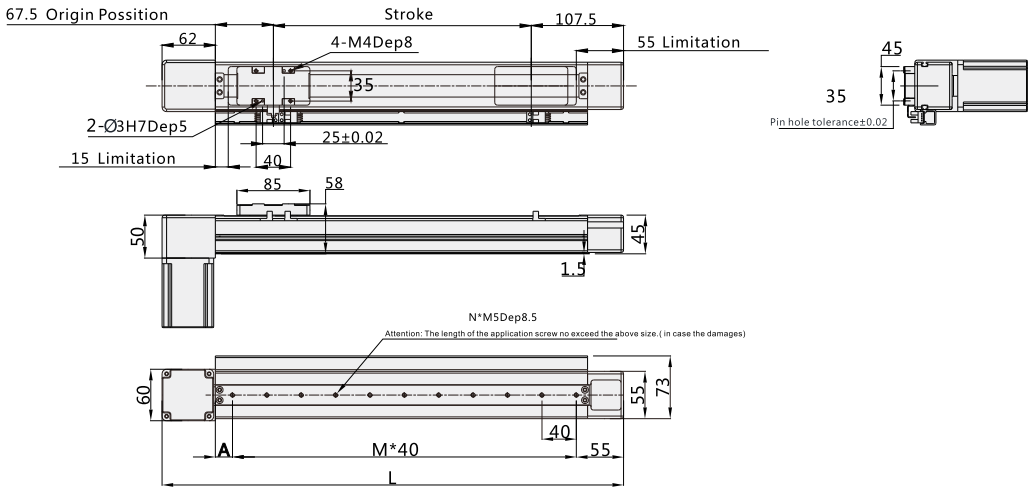

Note: Not including motor weight.

Working Stroke	100	150	200	250	300	350	400	450	500	550	600	650	700	750	800
L	337	387	437	487	537	587	637	687	737	787	837	887	937	987	1037
M	5	6	7	9	10	11	12	14	15	16	17	19	20	21	22
N	6	7	8	10	11	12	13	15	16	17	18	20	21	22	23
A	20	30	40	10	20	30	40	10	20	30	40	10	20	30	40
Weight KG	2.2	2.3	2.4	2.5	2.6	2.7	2.8	2.9	3	3.1	3.2	3.3	3.4	3.5	3.6

*In case special stroke please contact technical services.

BU: Upper Side

Unit (mm)

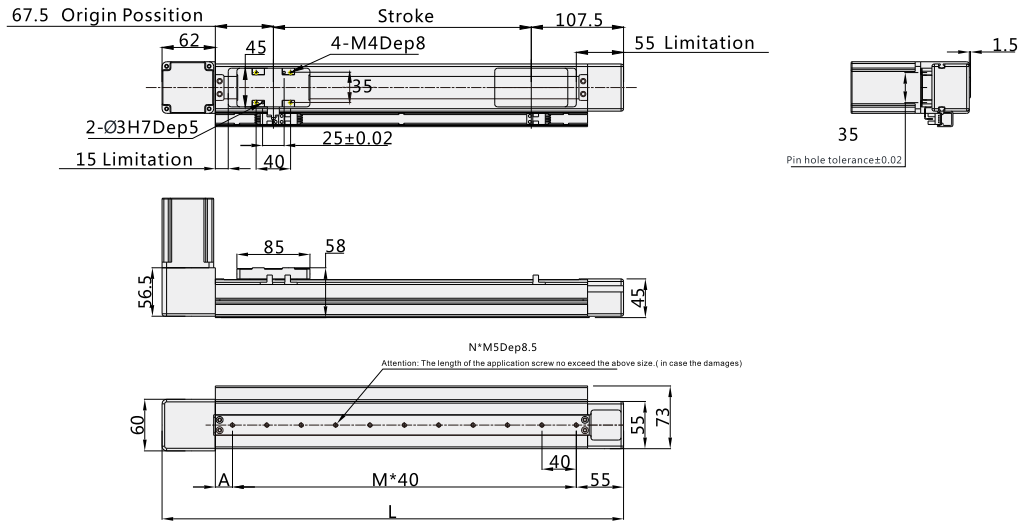

Note: Not including motor weight.

Working Stroke	100	150	200	250	300	350	400	450	500	550	600	650	700	750	800
L	337	387	437	487	537	587	637	687	737	787	837	887	937	987	1037
M	5	6	7	9	10	11	12	14	15	16	17	19	20	21	22
N	6	7	8	10	11	12	13	15	16	17	18	20	21	22	23
A	20	30	40	10	20	30	40	10	20	30	40	10	20	30	40
Weight KG	2.2	2.3	2.4	2.5	2.6	2.7	2.8	2.9	3	3.1	3.2	3.3	3.4	3.5	3.6

*In case special stroke please contact technical services.

RBC6

W-ROBOT® Linear Drives

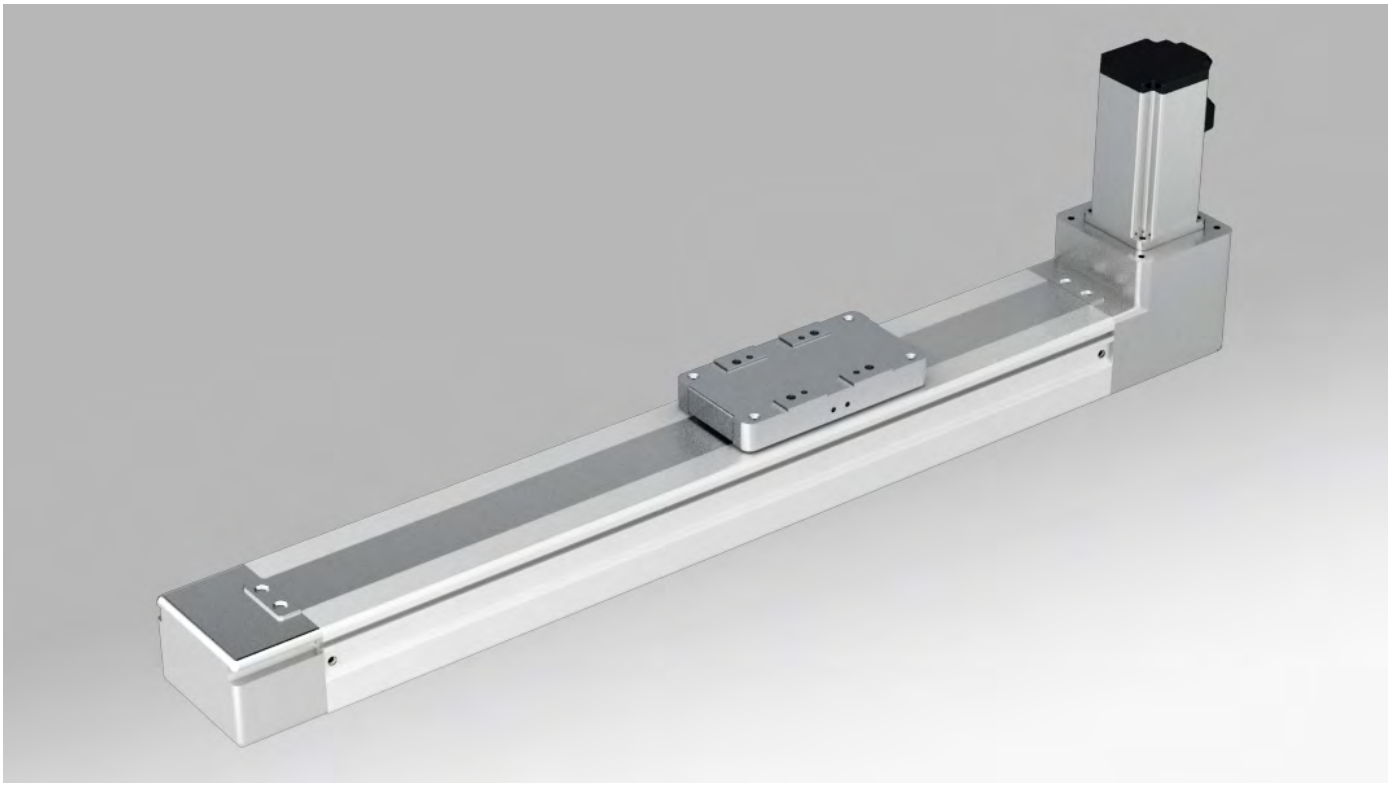

Motor direction

BU

BD

Guide for Model Selection

RBC6 — L80 — S100 — BU — ZW57 — C3 — ____

Base Style	
R	R series
BC	Cleanse Belt Type
6	Body width65

Leather belt Type	
L	Clean belt
X	Rubber belt
Lead	
80	80mm

Stroke(mm)
100-800

Motor way	
BU	Upper Side
BD	Down Side

Motor Type		Motor power	
W	W-Robot	57	57-Ø8
* For Z: Motor is from clients		Brakes	
		No	No brake
		B	With brake

Original Sensor position		Sensor switch	
External		External	
C	Motor side	2	2pcs
D	Oppsite motor side	3	3pcs
E	No	No sensor	

Sensor type	
No	NPN
P	PNP

Non-standard, d.c.,	
No	Standard type
BL1	Detailed information please see page032
B2	
D01	
U01	
UD01	
H01	
HU01	
HD01	
HUD01	
M01	
S01	

Specification

Motor power AC (W)		57 motor
Drive Type		Timing belt driving
Repeatability		±0.05
Lead(mm)		80
MaximumSpeed(mm/sec) 3000 Motor Speed(rpm/mim)		400
Maximum Payload(kg)	Horizontal	8
	Vertical	/
RatedThrust(N)		70
Linear Guide (mm)		42x9.5-1
Home Sensor	Outside	EE-SX672(NPN) EE-SX672P(PNP)
	Outside Guide	EE-SX674(NPN) EE-SX674P(PNP)

Wiring drawing of inductor(original point and endpoint)

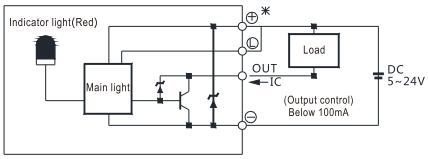

(Figure 1)

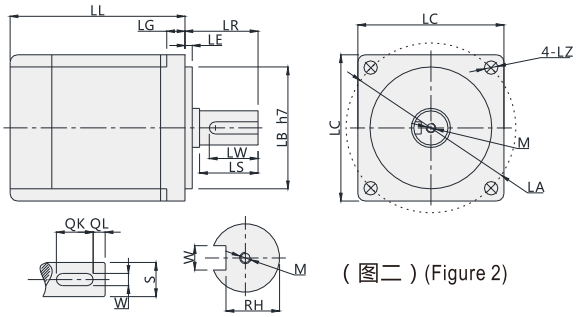

(图二) (Figure 2)

Servo Motor Matches List

(Table 1)

Servo motor size																			
Power(W)	Brand	Type		LL	LL(Brakes)	LA	LE	LZ	LC	LG	LW	RH	W	LR	S	LB	M	QK	QL
57 motor	W-ROBOT	W57S□	V:With brake U:No brake	81	97	66.67	1.6	4.5	57	4.8	15	7.2	-	21	8h6	38.1h7	-	-	-

□ Stand for empty

Max. Payload Diameters Table

(Unit : mm)

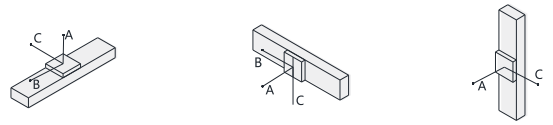

Horizontal installation	A	B	C
2.5kg	250	32	100
5kg	108	12	38

Wall installation	A	B	C
2.5kg	75	23	170
5kg	22	0	65

Max. Static Torque Table

(Unit : N.m)

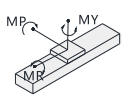

Maximum static torque	
MY	56
MP	56
MR	95

BD: Down Side

Unit (mm)

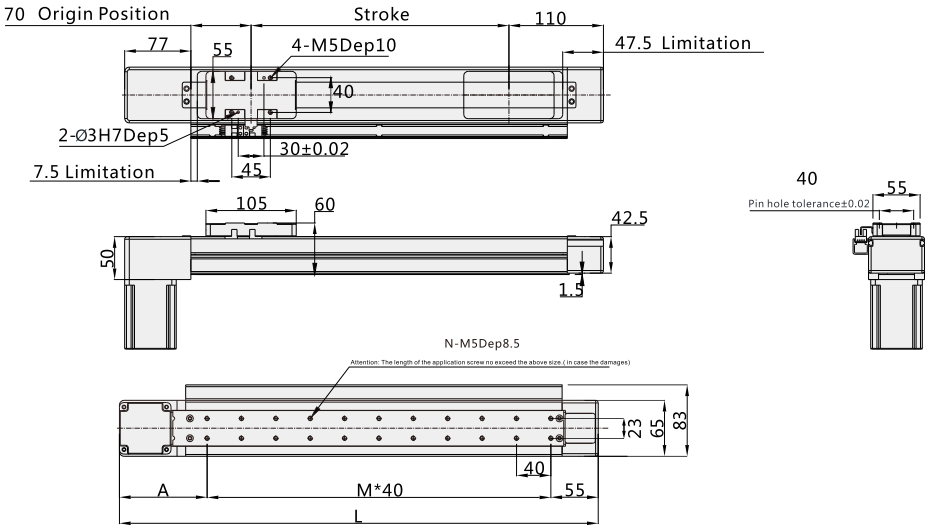

Note: Not including motor weight.

Working Stroke	100	150	200	250	300	350	400	450	500	550	600	650	700	750	800
L	357	407	457	507	557	607	657	707	757	807	857	907	957	1007	1057
M	5	7	8	9	10	12	13	14	15	17	18	19	20	22	23
N	12	16	18	22	22	26	28	30	32	36	38	40	42	46	48
A	102	72	82	92	102	72	82	92	102	72	82	92	102	72	82
Weight KG	2.7	2.9	3.1	3.3	3.5	3.7	3.9	4.1	4.3	4.5	4.7	4.9	5.1	5.3	5.5

*In case special stroke please contact technical services.

BU: Upper Side

Unit (mm)

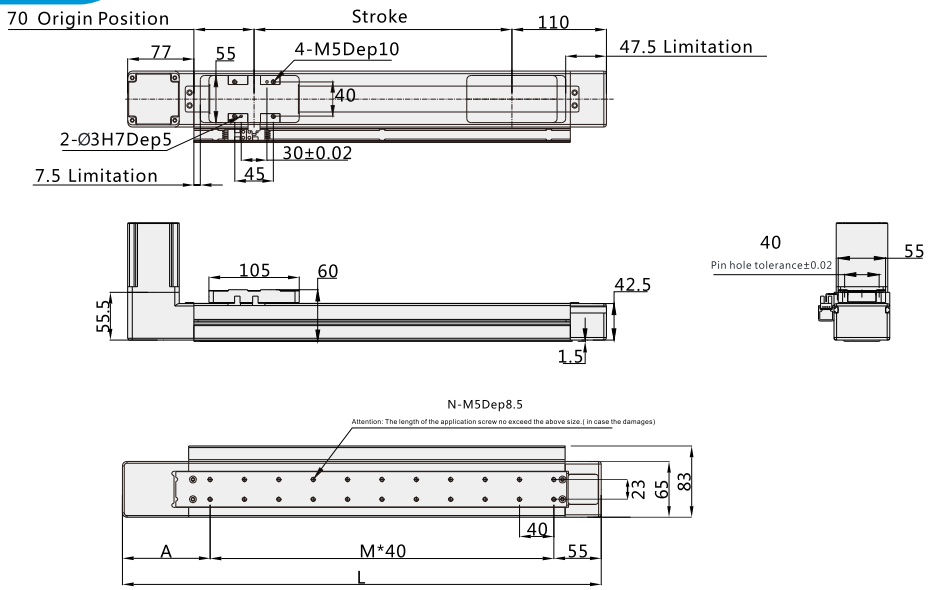

Note: Not including motor weight.

Working Stroke	100	150	200	250	300	350	400	450	500	550	600	650	700	750	800
L	357	407	457	507	557	607	657	707	757	807	857	907	957	1007	1057
M	5	7	8	9	10	12	13	14	15	17	18	19	20	22	23
N	12	16	18	22	22	26	28	30	32	36	38	40	42	46	48
A	102	72	82	92	102	72	82	92	102	72	82	92	102	72	82
Weight KG	2.7	2.9	3.1	3.3	3.5	3.7	3.9	4.1	4.3	4.5	4.7	4.9	5.1	5.3	5.5

*In case special stroke please contact technical services.

VBC10

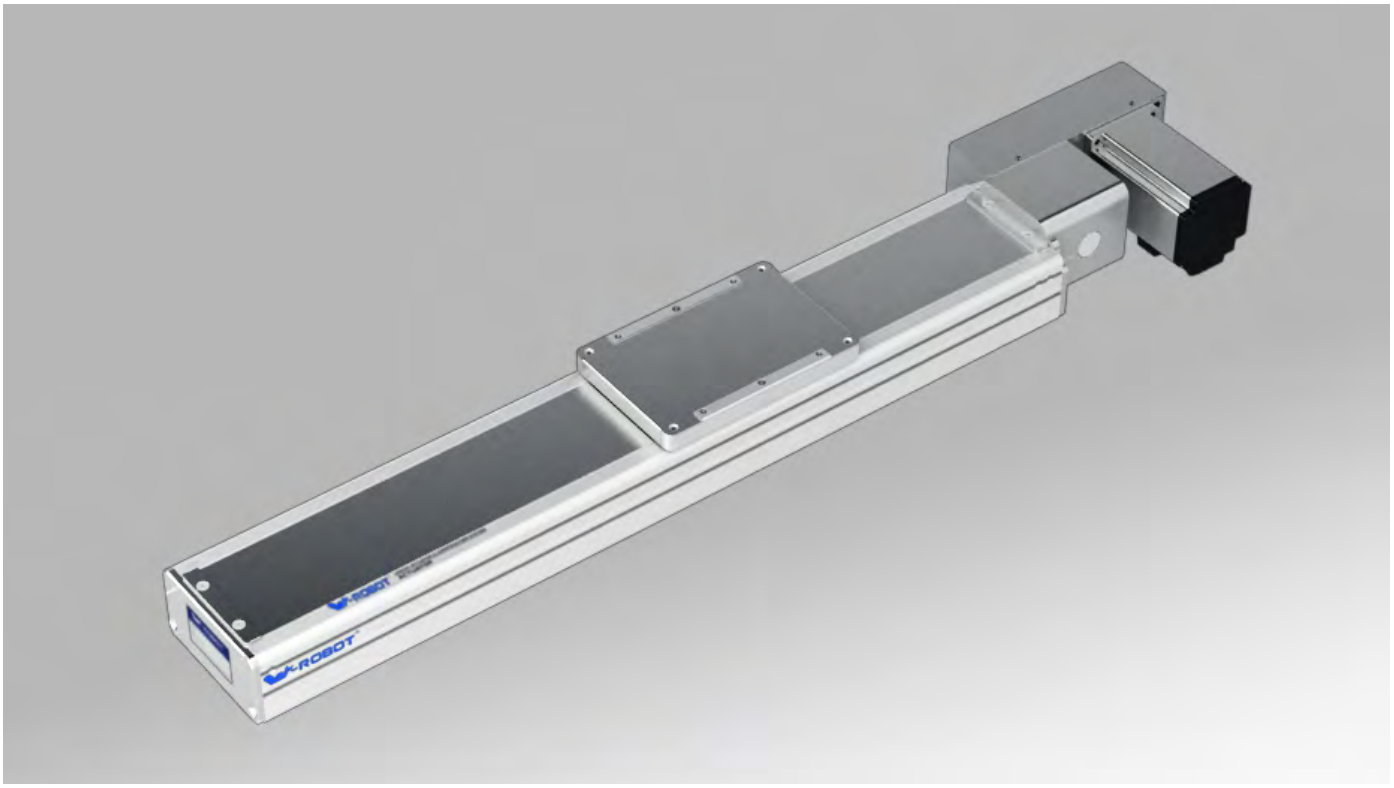

Motor direction

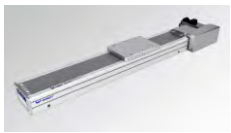
BR

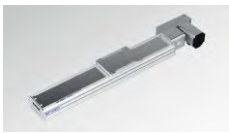
BL

BLU

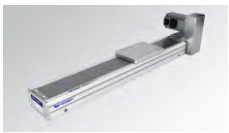
BRU

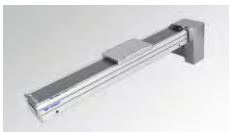
BRD

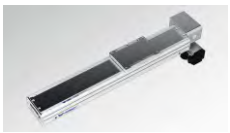
BLD

Guide for Model Selection

VBC10 — L45 — S100 — BL — ZP20B — C3 — ____

Base Style	
V	V series
BC	Cleanse Belt Type
10	Body width100

Leather belt Type	
L	Clean belt
X	Rubber belt
Lead	
45	45mm

Stroke(mm)
100-3000

Motor way	
BR	Right Side
BRU	Upper Right Side
BRD	Down Right Side
BL	Left Side
BLU	Upper Left Side
BLD	Down Left Side

Motor Type		Motor power	
P	Panasonic	20	200W
M	Mitsubishi	40	400W
Y	Yaskawa	57	Stepper
T	Delta	Brakes	
* For Z: Motor is from clients		No	No brake
		B	With brake

Original Sensor position		Sensor switch	
External		External	
C	Motor side	2	2pcs
D	Oppsite motor side	3	3pcs
E	No	No sensor	

Sensor type	
No	NPN
P	PNP

Non-standard, d.c.,	
No	Standard type
BL1	Detailed information please see page 032
B2	
D01	
U01	
UD01	
H01	
HU01	
HD01	
HUD01	
M01	
S01	
T	

If the linear satges require the extra sealing strip,please add the "T"at the end of the model numbers.

Specification

Motor power AC (W)		200W
Drive Type		Timing belt driving
Repeatability		±0.04
Lead(mm)		45
MaximumSpeed(mm/sec) 3000 Motor Speed(rpm/mim)		2250
Maximum Payload(kg)	Horizontal	15
	Vertical	
RatedThrust(N)		85
Linear Guide (mm)		15x12.5 -2
Home Sensor	Outside	EE-SX672(NPN) EE-SX672P(PNP)
	Outside Guide	EE-SX674(NPN) EE-SX674P(PNP)

Wiring drawing of inductor(original point and endpoint)

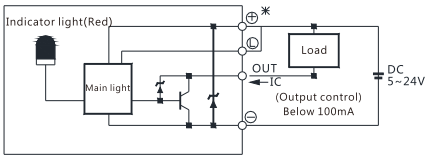

(Figure 1)

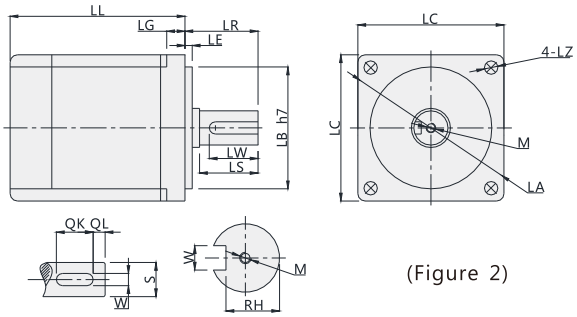

(Figure 2)

Servo Motor Matches List

(Table 1)

Servo motor size																			
Power(W)	Brand	Type		LL	LL(Brakes)	LA	LE	LZ	LC	LG	LW	RH	W	LR	S	LB	M	QK	QL
100W	Panasonic	MSMD012G1□	V:With brake U:No brake	92	122	45	3	3.4	38	6	14	6.2	3h9	25	8h6	30h7	M3x6L	-	-
	Delta	ECMA-C20401□S	S:With brake R:No brake	100.6	136.6	46	2.5	4.5	40	5	16	6.2	3	25	8h6	30h7	M3x8L	-	-
	Mitsubishi	HC-KFS12□K	B:With brake □:No brake	86.5	124.5	46	2.5	4.5	42	5	-	-	-	25	8h6	30h7	-	-	-
200W	Panasonic	MHMJ022G1□	V:With brake U:No brake	99	135.5	70	3	4.5	60	6.5	20	8.5	4h9	30	11h6	50h7	M4x8L	-	-
	Delta	ECMA-C20602□S	S:With brake R:No brake	105.5	141.5	70	3	5.5	60	7.5	20	11	5	30	14h6	50h7	M4x15L	-	-
	Mitsubishi	HC-KFS23□K	B:With brake □:No brake	99.5	131.5	70	3	5.8	62	7	-	-	-	30	14h6	50h7	-	-	-
400W	Panasonic	MHMJ042G1□	V:With brake U:No brake	118.5	155.5	70	3	4.5	60	6.5	20	11	5h9	30	14h6	50h7	M5x10L	-	-
	Delta	ECMA-C20604□S	S:With brake R:No brake	130.7	166.6	70	3	5.5	60	7.5	20	11	5	30	14h6	50h7	M4x15L	-	-
		ECMA-C20804□S	S:With brake R:No brake	112.3	152.8	90	3	6.6	80	8	20	11	5	35	14h6	70h7	M4x15L	-	-
	Mitsubishi	HC-KFS43□K	B:With brake □:No brake	124.5	165.5	70	3	5.8	62	7	-	-	-	30	14h6	50h7	-	-	-

□ Stand for empty

Max. Payload Diameters Table

(Unit : mm)

Horizontal installation	A	B	C
5kg	1400	750	600
8kg	1100	450	400
10kg	1000	350	350

Wall installation	A	B	C
5kg	660	500	1100
8kg	450	300	850
10kg	350	220	800

Max. Static Torque Table

(Unit : N.m)

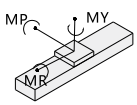

MY	110
MP	110
MR	120

VBC10

BR: Right Side

Unit (mm)

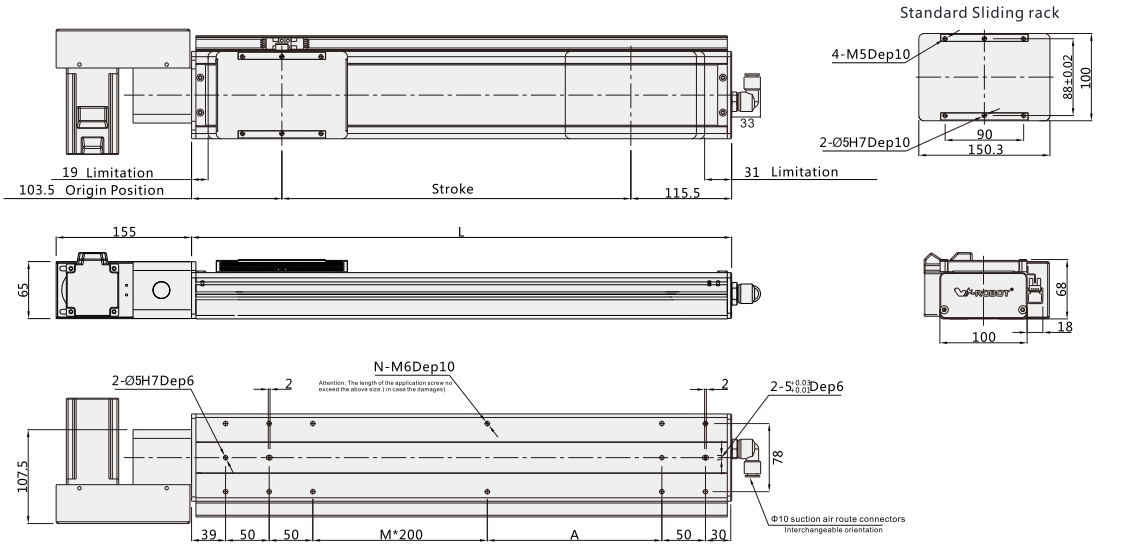

Note: Not including motor weight.

Working Stroke	100	150	200	250	300	350	400	450	500	550	600	650	700	750	800	850	900	950	1000	1050	1100	1150	1200	1250	1300	1350	1400	1450	1500
L	319	369	419	469	519	569	619	669	719	769	819	869	919	969	1019	1069	1119	1169	1219	1269	1319	1369	1419	1469	1519	1569	1619	1669	1719
M	0	0	0	1	1	1	1	2	2	2	2	3	3	3	3	4	4	4	4	5	5	5	5	6	6	6	6	7	7
N	10	10	10	12	12	12	12	14	14	14	14	16	16	16	16	18	18	18	18	20	20	20	20	22	22	22	22	24	24
A	100	150	200	50	100	150	200	50	100	150	200	50	100	150	200	50	100	150	200	50	100	150	200	50	100	150	200	50	100
Weight KG	4.5	5	5.5	6	6.5	7	7.5	8	8.5	9	9.5	10	10.5	11	11.5	12	12.5	13	13.5	14	14.5	15	15.5	16	16.5	17	17.5	18	18.5

*In case special stroke please contact technical services.

BRU: Upper Right Side

Unit (mm)

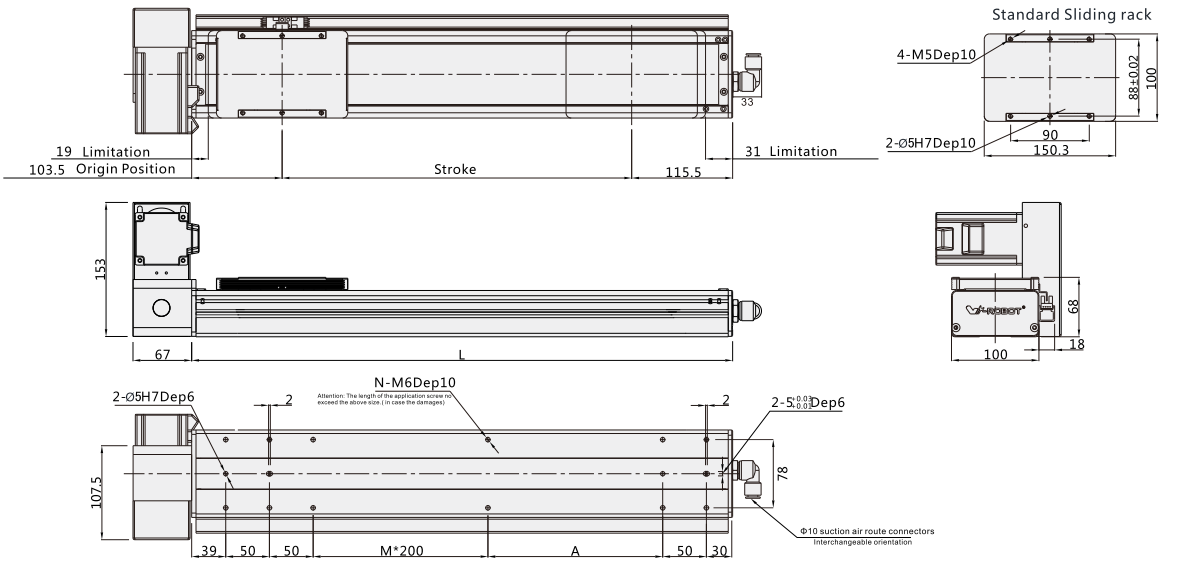

Note: Not including motor weight.

Working Stroke	100	150	200	250	300	350	400	450	500	550	600	650	700	750	800	850	900	950	1000	1050	1100	1150	1200	1250	1300	1350	1400	1450	1500
L	319	369	419	469	519	569	619	669	719	769	819	869	919	969	1019	1069	1119	1169	1219	1269	1319	1369	1419	1469	1519	1569	1619	1669	1719
M	0	0	0	1	1	1	1	2	2	2	2	3	3	3	3	4	4	4	4	5	5	5	5	6	6	6	6	7	7
N	10	10	10	12	12	12	12	14	14	14	14	16	16	16	16	18	18	18	18	20	20	20	20	22	22	22	22	24	24
A	100	150	200	50	100	150	200	50	100	150	200	50	100	150	200	50	100	150	200	50	100	150	200	50	100	150	200	50	100
Weight KG	4.5	5	5.5	6	6.5	7	7.5	8	8.5	9	9.5	10	10.5	11	11.5	12	12.5	13	13.5	14	14.5	15	15.5	16	16.5	17	17.5	18	18.5

*In case special stroke please contact technical services.

VBC10

V-ROBOT® Linear Drives

BRD: Down Right Side

Unit (mm)

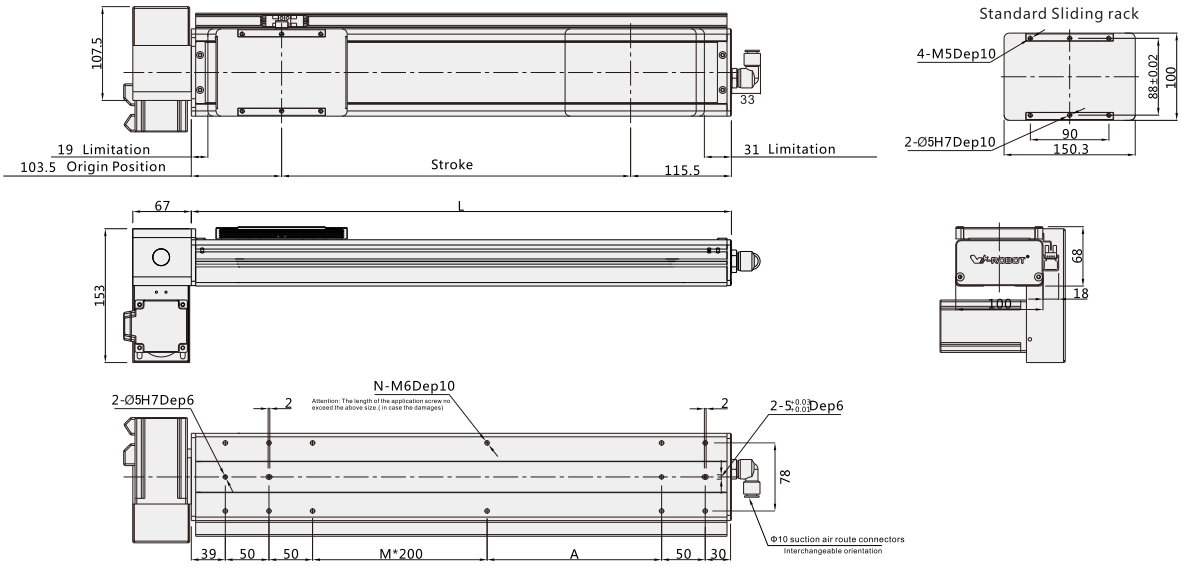

Note: Not including motor weight.

Working Stroke	100	150	200	250	300	350	400	450	500	550	600	650	700	750	800	850	900	950	1000	1050	1100	1150	1200	1250	1300	1350	1400	1450	1500
L	319	369	419	469	519	569	619	669	719	769	819	869	919	969	1019	1069	1119	1169	1219	1269	1319	1369	1419	1469	1519	1569	1619	1669	1719
M	0	0	0	1	1	1	1	2	2	2	2	3	3	3	3	4	4	4	4	5	5	5	5	6	6	6	6	7	7
N	10	10	10	12	12	12	12	14	14	14	14	16	16	16	16	18	18	18	18	20	20	20	20	22	22	22	22	24	24
A	100	150	200	50	100	150	200	50	100	150	200	50	100	150	200	50	100	150	200	50	100	150	200	50	100	150	200	50	100
Weight KG	4.5	5	5.5	6	6.5	7	7.5	8	8.5	9	9.5	10	10.5	11	11.5	12	12.5	13	13.5	14	14.5	15	15.5	16	16.5	17	17.5	18	18.5

*In case special stroke please contact technical services.

BL: Left Side

Unit (mm)

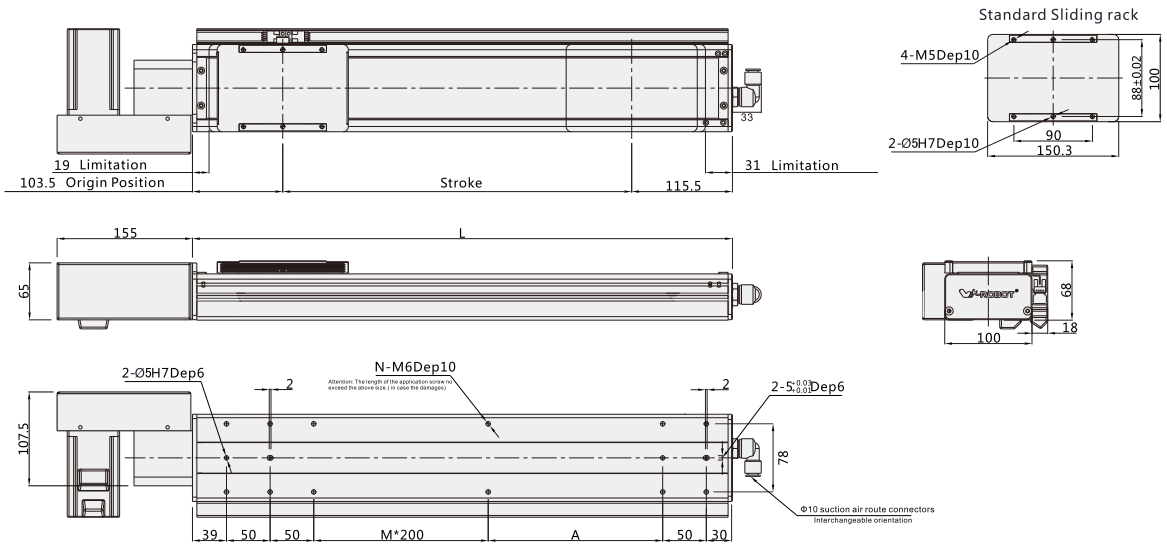

Note: Not including motor weight.

Working Stroke	100	150	200	250	300	350	400	450	500	550	600	650	700	750	800	850	900	950	1000	1050	1100	1150	1200	1250	1300	1350	1400	1450	1500
L	319	369	419	469	519	569	619	669	719	769	819	869	919	969	1019	1069	1119	1169	1219	1269	1319	1369	1419	1469	1519	1569	1619	1669	1719
M	0	0	0	1	1	1	1	2	2	2	2	3	3	3	3	4	4	4	4	5	5	5	5	6	6	6	6	7	7
N	10	10	10	12	12	12	12	14	14	14	14	16	16	16	16	18	18	18	18	20	20	20	20	22	22	22	22	24	24
A	100	150	200	50	100	150	200	50	100	150	200	50	100	150	200	50	100	150	200	50	100	150	200	50	100	150	200	50	100
Weight KG	4.5	5	5.5	6	6.5	7	7.5	8	8.5	9	9.5	10	10.5	11	11.5	12	12.5	13	13.5	14	14.5	15	15.5	16	16.5	17	17.5	18	18.5

*In case special stroke please contact technical services.

BLU: Upper Left Side

Unit (mm)

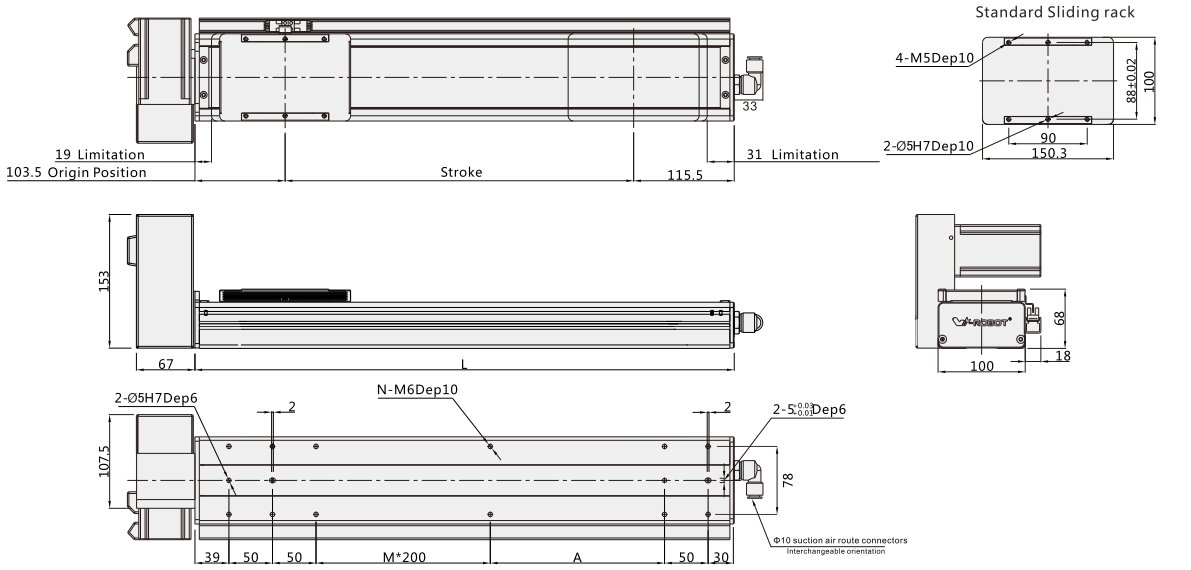

Note: Not including motor weight.

Working Stroke	100	150	200	250	300	350	400	450	500	550	600	650	700	750	800	850	900	950	1000	1050	1100	1150	1200	1250	1300	1350	1400	1450	1500
L	319	369	419	469	519	569	619	669	719	769	819	869	919	969	1019	1069	1119	1169	1219	1269	1319	1369	1419	1469	1519	1569	1619	1669	1719
M	0	0	0	1	1	1	1	2	2	2	2	3	3	3	3	4	4	4	4	5	5	5	5	6	6	6	6	7	7
N	10	10	10	12	12	12	12	14	14	14	14	16	16	16	16	18	18	18	18	20	20	20	20	22	22	22	22	24	24
A	100	150	200	50	100	150	200	50	100	150	200	50	100	150	200	50	100	150	200	50	100	150	200	50	100	150	200	50	100
Weight KG	4.5	5	5.5	6	6.5	7	7.5	8	8.5	9	9.5	10	10.5	11	11.5	12	12.5	13	13.5	14	14.5	15	15.5	16	16.5	17	17.5	18	18.5

*In case special stroke please contact technical services.

BLD: Down Left Side

Unit (mm)

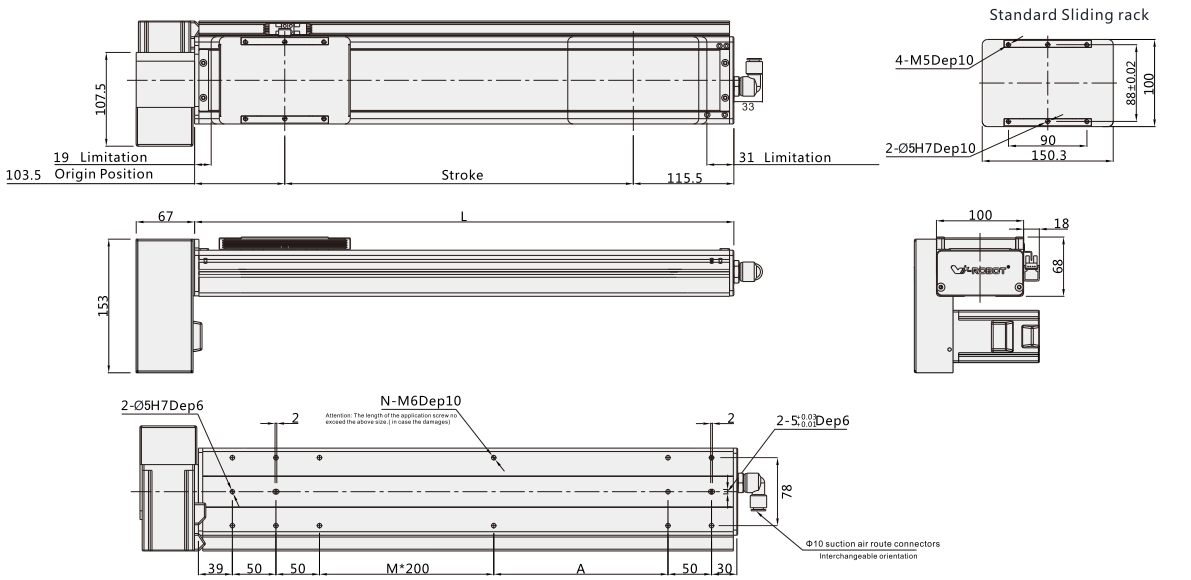

Note: Not including motor weight.

Working Stroke	100	150	200	250	300	350	400	450	500	550	600	650	700	750	800	850	900	950	1000	1050	1100	1150	1200	1250	1300	1350	1400	1450	1500
L	319	369	419	469	519	569	619	669	719	769	819	869	919	969	1019	1069	1119	1169	1219	1269	1319	1369	1419	1469	1519	1569	1619	1669	1719
M	0	0	0	1	1	1	1	2	2	2	2	3	3	3	3	4	4	4	4	5	5	5	5	6	6	6	6	7	7
N	10	10	10	12	12	12	12	14	14	14	14	16	16	16	16	18	18	18	18	20	20	20	20	22	22	22	22	24	24
A	100	150	200	50	100	150	200	50	100	150	200	50	100	150	200	50	100	150	200	50	100	150	200	50	100	150	200	50	100
Weight KG	4.5	5	5.5	6	6.5	7	7.5	8	8.5	9	9.5	10	10.5	11	11.5	12	12.5	13	13.5	14	14.5	15	15.5	16	16.5	17	17.5	18	18.5

*In case special stroke please contact technical services.

VBC12

W-ROBOT® Linear Drives

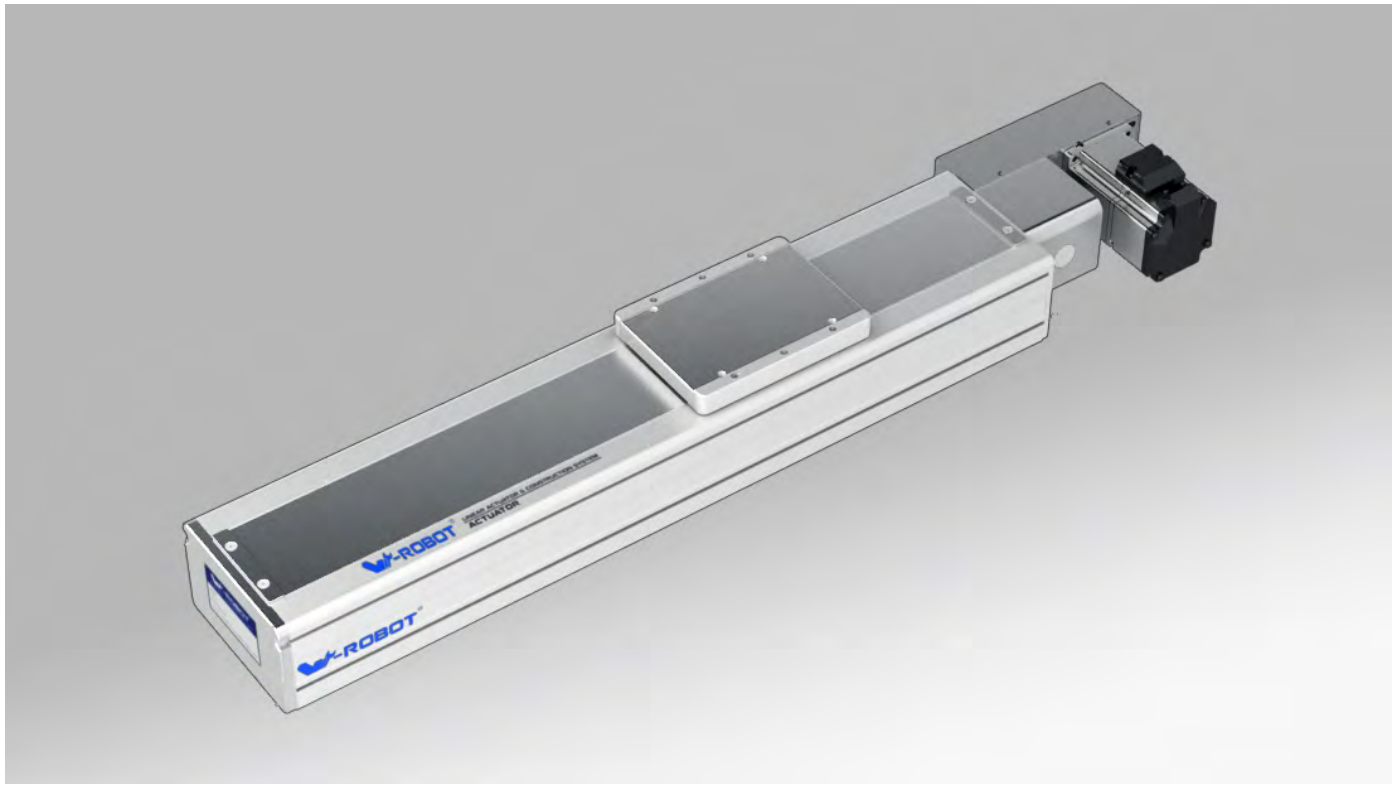

Motor direction

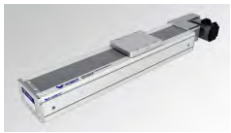
BL

BR

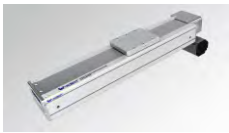
BLD

BLU

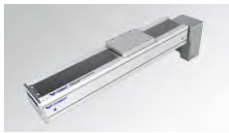
BRD

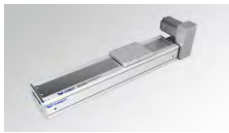
BRU

Guide for Model Selection

VBC12 — L45 — S100 — BL — ZP20B — C3 — ____

Base Style	
V	V series
BC	Cleanse Belt Type
12	Body width120

Leather belt Type	
L	Clean belt
X	Rubber belt
Lead	
45	45mm

Stroke(mm)
100-3500

Motor way	
BR	Right Side
BRU	Upper Right Side
BRD	Down Right Side
BL	Left Side
BLU	Upper Left Side
BLD	Down Left Side

Motor Type		Motor power	
P	Panasonic	20	200W
M	Mitsubishi	40	400W
Y	Yaskawa	57	57 Stepper
T	Delta	Brakes	
* For Z: Motor is from clients		No	No brake
		B	With brake

Original Sensor position		Sensor switch	
External		External	
C	Motor side	2	2pcs
D	Oppsite motor side	3	3pcs
E	No	No sensor	

Sensor type	
No	NPN
P	PNP

Non-standard, d.c..	
No	Standard type
BL1	Detailed information please see page032
B2	
D01	
U01	
UD01	
H01	
HU01	
HD01	
HUD01	
M01	
S01	
T	

If the linear satges require the extra sealing strip,please add the "T"at the end of the model numbers.

Specification

Motor power AC (W)		400W
Drive Type		Timming belt driving
Repeatability		±0.04
Lead(mm)		45
MaximumSpeed(mm/sec) 3000 Motor Speed(rpm/mim)		2250
Maximum Payload(kg)	Horizontal	30
	Vertical	
RatedThrust(N)		170
Linear Guide (mm)		15x12.5 -2
Home Sensor	Outside	EE-SX672(NPN) EE-SX672P(PNP)
	Outside Guide	EE-SX674(NPN) EE-SX674P(PNP)

Wiring drawing of inductor(original point and endpoint)

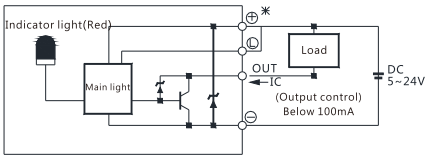

(Figure 1)

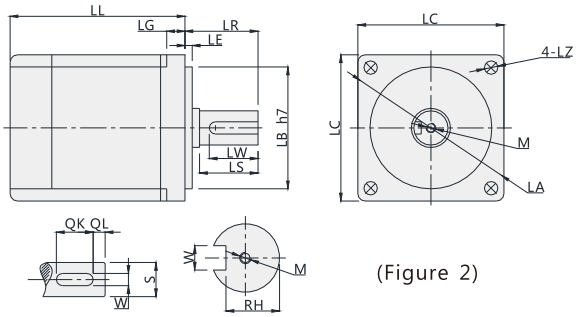

(Figure 2)

Servo Motor Matches List

(Table 1)

Servo motor size																			
Power(W)	Brand	Type		LL	LL(Brakes)	LA	LE	LZ	LC	LG	LW	RH	W	LR	S	LB	M	QK	QL
200W	Panasonic	MHMJ022G1□	V:With brake U:No brake	99	135.5	70	3	4.5	60	6.5	20	8.5	4h9	30	11h6	50h7	M4x8L	-	-
	Delta	ECMA-C20602□S	S:With brake R:No brake	105.5	141.5	70	3	5.5	60	7.5	20	11	5	30	14h6	50h7	M4x15L	-	-
	Mitsubishi	HC-KFS23□K	B:With brake □:No brake	99.5	131.5	70	3	5.8	62	7	-	-	-	30	14h6	50h7	-	-	-
400W	Panasonic	MHMJ042G1□	V:With brake U:No brake	118.5	155.5	70	3	4.5	60	6.5	20	11	5h9	30	14h6	50h7	M5x10L	-	-
	Delta	ECMA-C20604□S	S:With brake R:No brake	130.7	166.6	70	3	5.5	60	7.5	20	11	5	30	14h6	50h7	M4x15L	-	-
		ECMA-C20804□S	S:With brake R:No brake	112.3	152.8	90	3	6.6	80	8	20	11	5	35	14h6	70h7	M4x15L	-	-
	Mitsubishi	HC-KFS43□K	B:With brake □:No brake	124.5	165.5	70	3	5.8	62	7	-	-	-	30	14h6	50h7	-	-	-

□ Stand for empty

Max. Payload Diameters Table

(Unit : mm)

Horizontal installation	A	B	C
10kg	2700	1700	1050
20kg	2100	850	650
25kg	1700	600	500

Wall installation	A	B	C
10kg	1070	1200	2000
20kg	600	560	1500
25kg	410	350	1150

Max. Static Torque Table

(Unit : N.m)

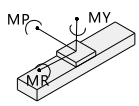

Maximum static torque	
MY	174
MP	175
MR	153

VBC12

W-ROBOT® Linear Drives

BR: Right Side

Unit (mm)

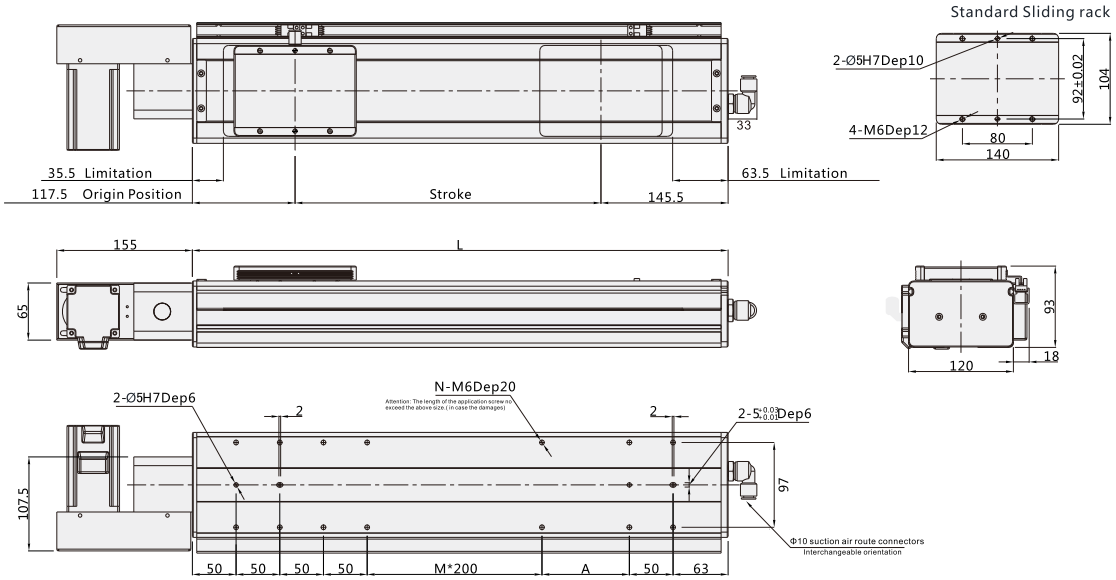

Note: Not including motor weight.

Working Stroke	100	150	200	250	300	350	400	450	500	550	600	650	700	750	800	850	900	950	1000	1050	1100	1150	1200	1250	1300	1350	1400	1450	1500
L	358	408	458	508	558	608	658	708	758	808	858	908	958	1008	1058	1108	1158	1208	1258	1308	1358	1408	1458	1508	1558	1608	1658	1708	1758
M	0	0	0	0	1	1	1	1	2	2	2	2	3	3	3	3	4	4	4	4	5	5	5	5	6	6	6	6	7
N	12	12	12	12	14	14	14	14	16	16	16	16	18	18	18	18	20	20	20	20	22	22	22	22	24	24	24	24	26
A	50	100	150	200	50	100	150	200	50	100	150	200	50	100	150	200	50	100	150	200	50	100	150	200	50	100	150	200	50
Weight KG	11.6	12.1	12.6	13.1	13.6	14.1	14.6	15.1	15.6	16.1	16.6	17.1	17.6	18.1	18.6	19.1	19.6	20.1	20.6	21.1	21.6	22.1	22.6	23.1	23.6	24.1	24.6	25.1	25.6

*In case special stroke please contact technical services.

BRU: Upper Right Side

Unit (mm)

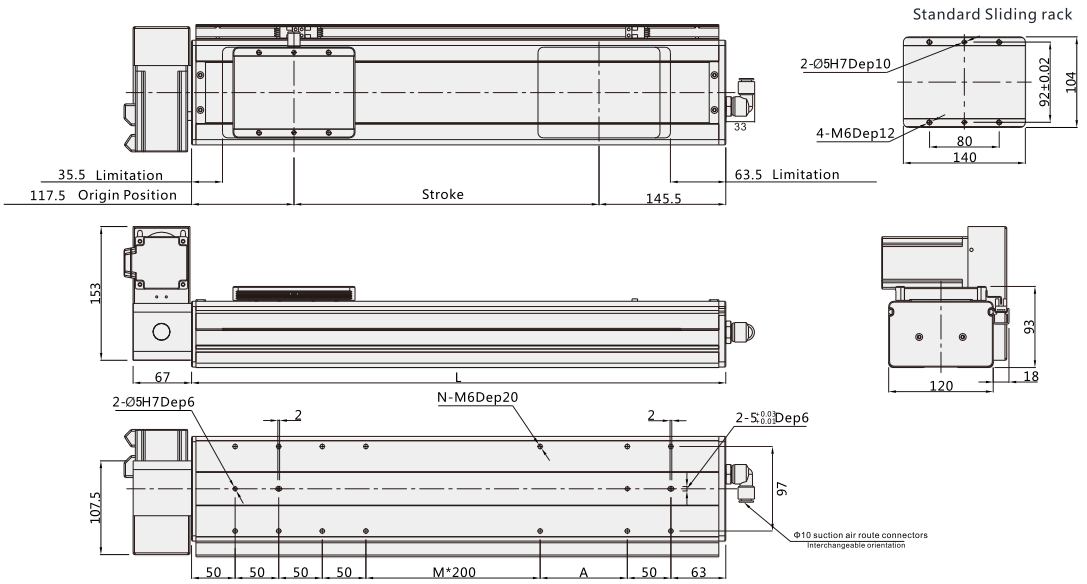

Note: Not including motor weight.

Working Stroke	100	150	200	250	300	350	400	450	500	550	600	650	700	750	800	850	900	950	1000	1050	1100	1150	1200	1250	1300	1350	1400	1450	1500
L	358	408	458	508	558	608	658	708	758	808	858	908	958	1008	1058	1108	1158	1208	1258	1308	1358	1408	1458	1508	1558	1608	1658	1708	1758
M	0	0	0	0	1	1	1	1	2	2	2	2	3	3	3	3	4	4	4	4	5	5	5	5	6	6	6	6	7
N	12	12	12	12	14	14	14	14	16	16	16	16	18	18	18	18	20	20	20	20	22	22	22	22	24	24	24	24	26
A	50	100	150	200	50	100	150	200	50	100	150	200	50	100	150	200	50	100	150	200	50	100	150	200	50	100	150	200	50
Weight KG	11.6	12.1	12.6	13.1	13.6	14.1	14.6	15.1	15.6	16.1	16.6	17.1	17.6	18.1	18.6	19.1	19.6	20.1	20.6	21.1	21.6	22.1	22.6	23.1	23.6	24.1	24.6	25.1	25.6

*In case special stroke please contact technical services.

BRD: Down Right Side

Unit (mm)

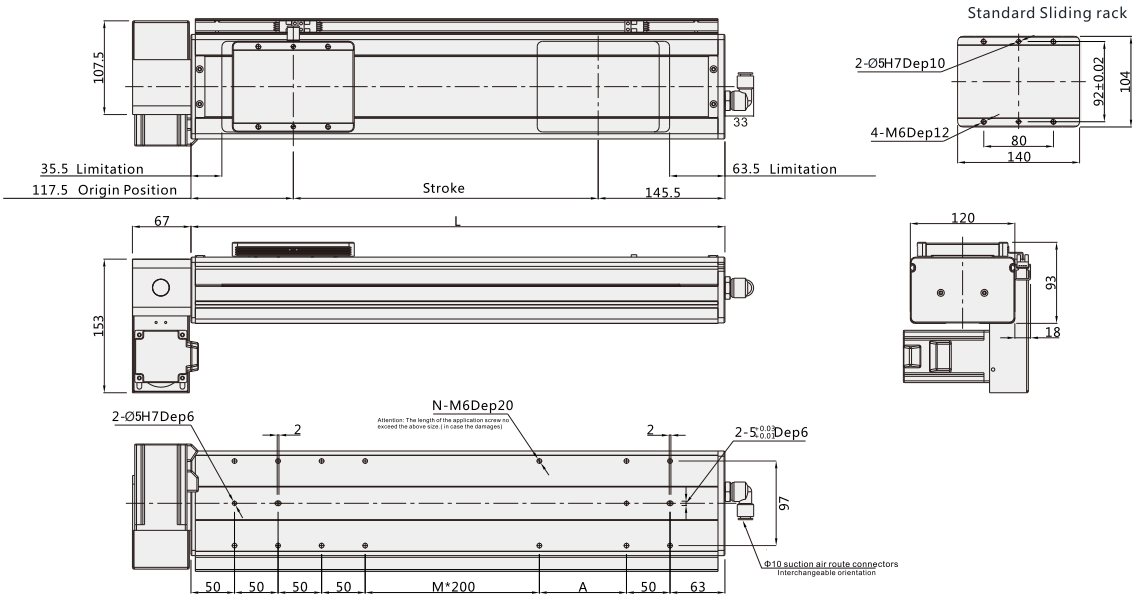

Note:Not including motor weight.

Working Stroke	100	150	200	250	300	350	400	450	500	550	600	650	700	750	800	850	900	950	1000	1050	1100	1150	1200	1250	1300	1350	1400	1450	1500
L	358	408	458	508	558	608	658	708	758	808	858	908	958	1008	1058	1108	1158	1208	1258	1308	1358	1408	1458	1508	1558	1608	1658	1708	1758
M	0	0	0	0	1	1	1	1	2	2	2	2	3	3	3	3	4	4	4	4	5	5	5	5	6	6	6	6	7
N	12	12	12	12	14	14	14	14	16	16	16	16	18	18	18	18	20	20	20	20	22	22	22	22	24	24	24	24	26
A	50	100	150	200	50	100	150	200	50	100	150	200	50	100	150	200	50	100	150	200	50	100	150	200	50	100	150	200	50
Weight KG	11.6	12.1	12.6	13.1	13.6	14.1	14.6	15.1	15.6	16.1	16.6	17.1	17.6	18.1	18.6	19.1	19.6	20.1	20.6	21.1	21.6	22.1	22.6	23.1	23.6	24.1	24.6	25.1	25.6

*In case special stroke please contact technical services.

BL: Left Side

Unit (mm)

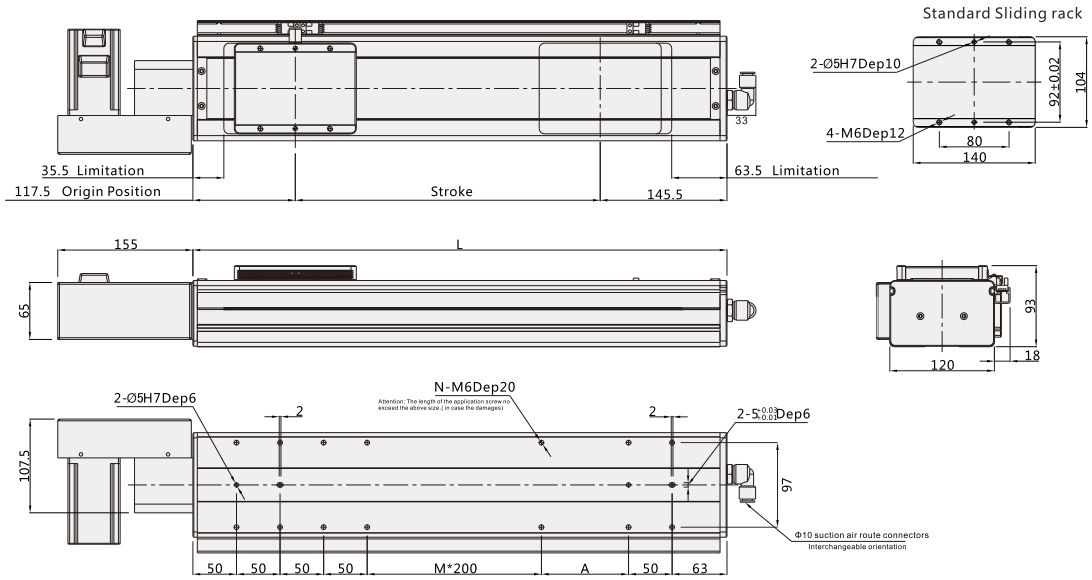

Note: Not including motor weight.

Working Stroke	100	150	200	250	300	350	400	450	500	550	600	650	700	750	800	850	900	950	1000	1050	1100	1150	1200	1250	1300	1350	1400	1450	1500
L	358	408	458	508	558	608	658	708	758	808	858	908	958	1008	1058	1108	1158	1208	1258	1308	1358	1408	1458	1508	1558	1608	1658	1708	1758
M	0	0	0	0	1	1	1	1	2	2	2	2	3	3	3	3	4	4	4	4	5	5	5	5	6	6	6	6	7
N	12	12	12	12	14	14	14	14	16	16	16	16	18	18	18	18	20	20	20	20	22	22	22	22	24	24	24	24	26
A	50	100	150	200	50	100	150	200	50	100	150	200	50	100	150	200	50	100	150	200	50	100	150	200	50	100	150	200	50
Weight KG	11.6	12.1	12.6	13.1	13.6	14.1	14.6	15.1	15.6	16.1	16.6	17.1	17.6	18.1	18.6	19.1	19.6	20.1	20.6	21.1	21.6	22.1	22.6	23.1	23.6	24.1	24.6	25.1	25.6

*In case special stroke please contact technical services.

VBC12

W-ROBOT® Linear Drives

BLU: Upper Left Side

Unit (mm)

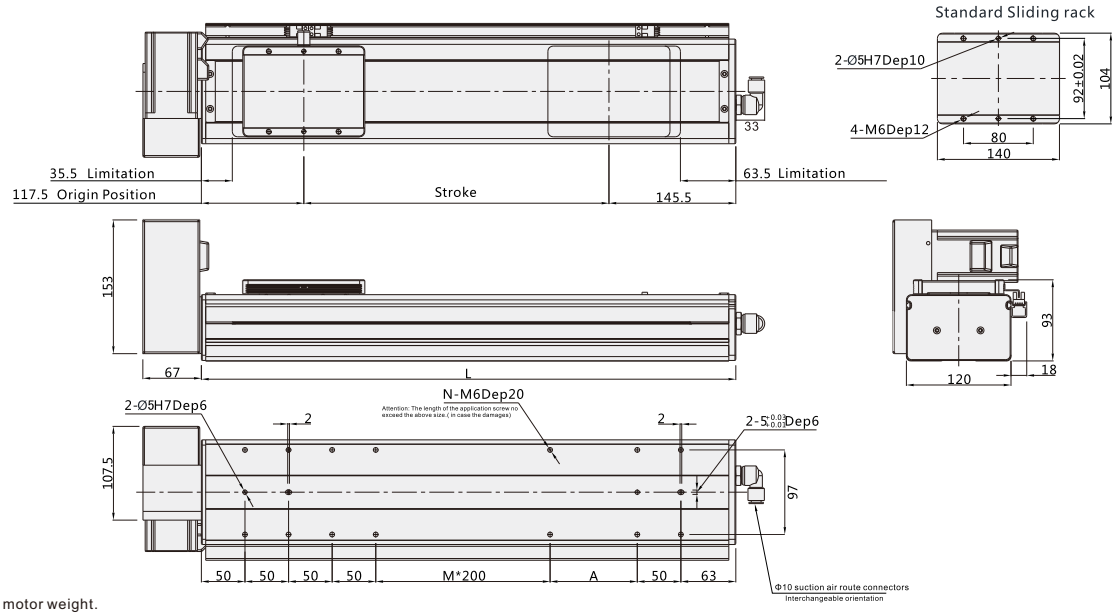

Note: Not including motor weight.

Working Stroke	100	150	200	250	300	350	400	450	500	550	600	650	700	750	800	850	900	950	1000	1050	1100	1150	1200	1250	1300	1350	1400	1450	1500
L	358	408	458	508	558	608	658	708	758	808	858	908	958	1008	1058	1108	1158	1208	1258	1308	1358	1408	1458	1508	1558	1608	1658	1708	1758
M	0	0	0	0	1	1	1	1	2	2	2	2	3	3	3	3	4	4	4	4	5	5	5	5	6	6	6	6	7
N	12	12	12	12	14	14	14	14	16	16	16	16	18	18	18	18	20	20	20	20	22	22	22	22	24	24	24	24	26
A	50	100	150	200	50	100	150	200	50	100	150	200	50	100	150	200	50	100	150	200	50	100	150	200	50	100	150	200	50
Weight KG	11.6	12.1	12.6	13.1	13.6	14.1	14.6	15.1	15.6	16.1	16.6	17.1	17.6	18.1	18.6	19.1	19.6	20.1	20.6	21.1	21.6	22.1	22.6	23.1	23.6	24.1	24.6	25.1	25.6

*In case special stroke please contact technical services.

BLD: Down Left Side

Unit (mm)

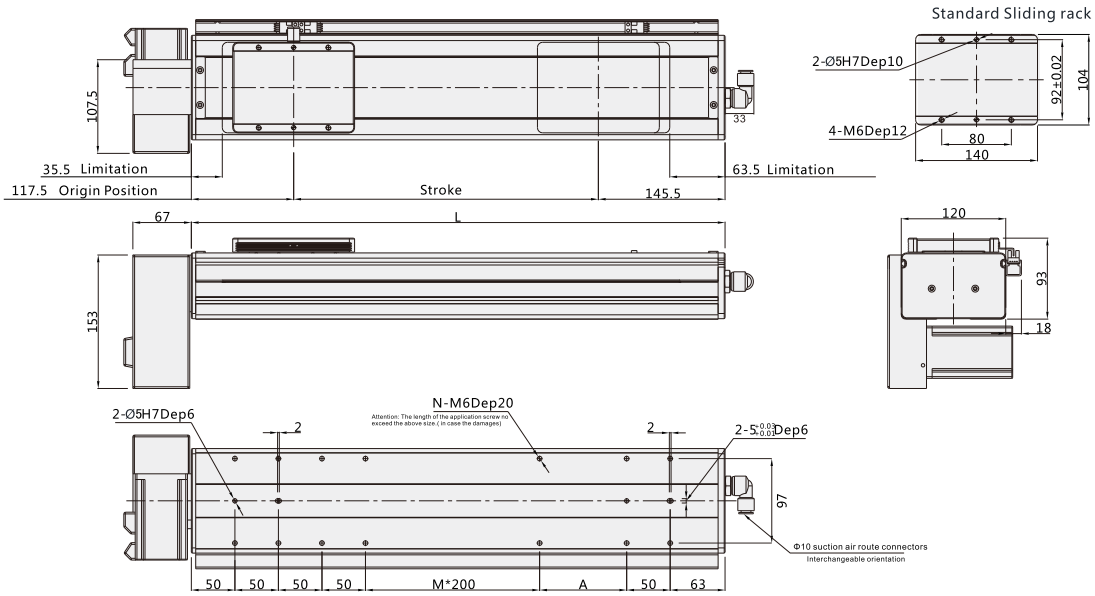

Note: Not including motor weight.

Working Stroke	100	150	200	250	300	350	400	450	500	550	600	650	700	750	800	850	900	950	1000	1050	1100	1150	1200	1250	1300	1350	1400	1450	1500
L	358	408	458	508	558	608	658	708	758	808	858	908	958	1008	1058	1108	1158	1208	1258	1308	1358	1408	1458	1508	1558	1608	1658	1708	1758
M	0	0	0	0	1	1	1	1	2	2	2	2	3	3	3	3	4	4	4	4	5	5	5	5	6	6	6	6	7
N	12	12	12	12	14	14	14	14	16	16	16	16	18	18	18	18	20	20	20	20	22	22	22	22	24	24	24	24	26
A	50	100	150	200	50	100	150	200	50	100	150	200	50	100	150	200	50	100	150	200	50	100	150	200	50	100	150	200	50
Weight KG	11.6	12.1	12.6	13.1	13.6	14.1	14.6	15.1	15.6	16.1	16.6	17.1	17.6	18.1	18.6	19.1	19.6	20.1	20.6	21.1	21.6	22.1	22.6	23.1	23.6	24.1	24.6	25.1	25.6

*In case special stroke please contact technical services.

VBC14

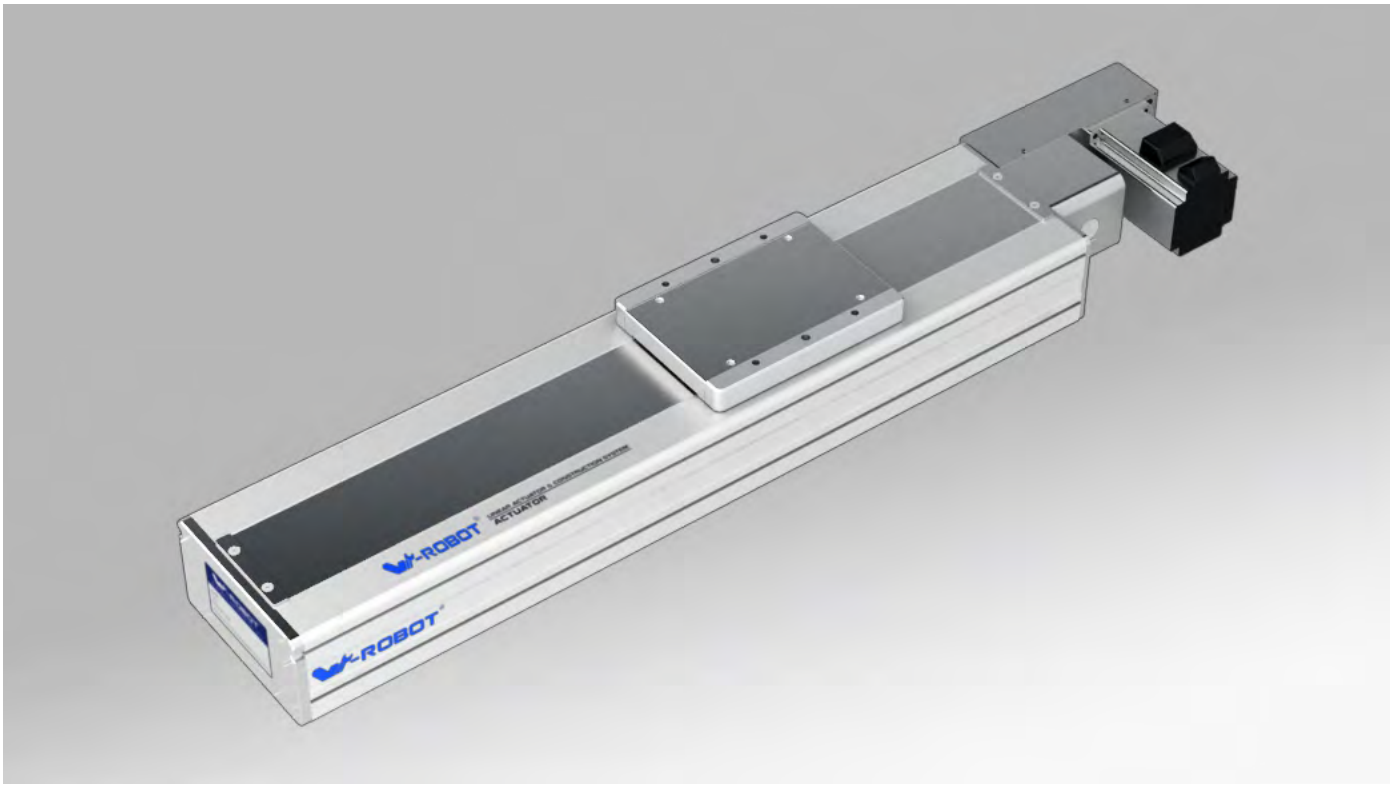

Motor direction

BR

BL

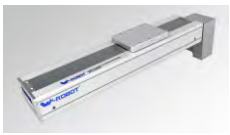
BRD

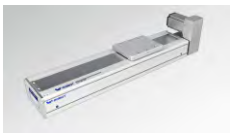
BRU

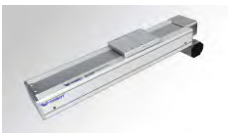
BLD

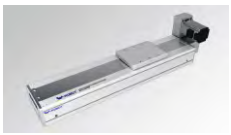
BLU

Guide for Model Selection

VBC14 — L45 — S100 — BL — ZP20B — C3 — ____

Base Style	
V	V series
BC	Cleanse Belt Type
14	Body width140

Leather belt Type	
L	Clean belt
X	Rubber belt
Lead	
45	45mm

Stroke(mm)
100-3500

Motor way	
BR	Right Side
BRU	Upper Right Side
BRD	Down Right Side
BL	Left Side
BLU	Upper Left Side
BLD	Down Left Side

Motor Type		Motor power	
P	Panasonic	20	200W
M	Mitsubishi	40	400W
Y	Yaskawa	75	750W
T	Delta	Brakes	
* For Z: Motor is from clients		No	No brake
		B	With brake

Original Sensor position		Sensor switch	
External		External	
C	Motor side	2	2pcs
D	Oppsite motor side	3	3pcs
E	No	No sensor	

Sensor type	
No	NPN
P	PNP

Non-standard, d.c.,	
No	Standard type
BL1	Detailed information please see page 032
B2	
D01	
U01	
UD01	
H01	
HU01	
HD01	
HUD01	
M01	
S01	
T	

If the linear satges require the extra sealing strip,please add the "T"at the end of the model numbers.

Specification

Motor power AC (W)		400W
Drive Type		Timing belt driving
Repeatability		±0.04
Lead(mm)		45
MaximumSpeed(mm/sec) 3000 Motor Speed(rpm/mim)		2250
Maximum Payload(kg)	Horizontal	40
	Vertical	
RatedThrust(N)		170
Linear Guide (mm)		20x15.5-2
Home Sensor		Outside EE-SX672(NPN) EE-SX672P(PNP)
		Outside Guide EE-SX674(NPN) EE-SX674P(PNP)

Wiring drawing of inductor(original point and endpoint)

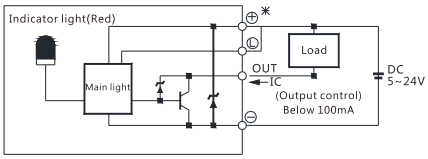

(Figure 1)

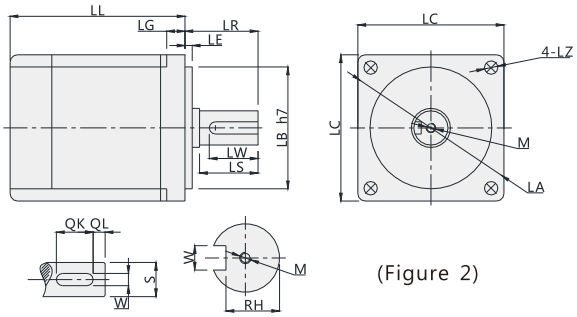

(Figure 2)

Servo Motor Matches List

(Table 1)

Servo motor size																			
Power(W)	Brand	Type		LL	LL(Brakes)	LA	LE	LZ	LC	LG	LW	RH	W	LR	S	LB	M	QK	QL
200W	Panasonic	MHMJ022G1□	V:With brake U:No brake	99	135.5	70	3	4.5	60	6.5	20	8.5	4h9	30	11h6	50h7	M4x8L	-	-
	Delta	ECMA-C20602□S	S:With brake R:No brake	105.5	141.5	70	3	5.5	60	7.5	20	11	5	30	14h6	50h7	M4x15L	-	-
	Mitsubishi	HC-KFS23□K	B:With brake □:No brake	99.5	131.5	70	3	5.8	62	7	-	-	-	30	14h6	50h7	-	-	-
400W	Panasonic	MHMJ042G1□	V:With brake U:No brake	118.5	155.5	70	3	4.5	60	6.5	20	11	5h9	30	14h6	50h7	M5x10L	-	-
	Delta	ECMA-C20604□S	S:With brake R:No brake	130.7	166.6	70	3	5.5	60	7.5	20	11	5	30	14h6	50h7	M4x15L	-	-
		ECMA-C20804□S	S:With brake R:No brake	112.3	152.8	90	3	6.6	80	8	20	11	5	35	14h6	70h7	M4x15L	-	-
	Mitsubishi	HC-KFS43□K	B:With brake □:No brake	124.5	165.5	70	3	5.8	62	7	-	-	-	30	14h6	50h7	-	-	-
750W	Panasonic	MHMJ082G1□	V:With brake U:No brake	127.2	164.2	90	3	6	80	8	25	15.5	6h9	35	19h6	70h7	M5x10L	-	-
	Delta	ECMA-C20807□S	S:With brake R:No brake	138.3	178	90	3	6.6	80	8	25	15.5	6	35	19h6	70h7	M6x20L	-	-
		ECMA-C20907□S	S:With brake R:No brake	130.2	161.3	100	3	6.6	86	8	20	13	5	35	16h6	80h7	M5x15L	-	-
	Mitsubishi	HC-KFS73□K	B:With brake □:No brake	142	177.5	90	3	6.6	82	8	-	-	-	40	19h6	70h7	-	-	-

□ Stand for empty

Max. Payload Diameters Table

(Unit : mm)

Horizontal installation	A	B	C
10kg	2800	1800	1250
20kg	2200	950	750
30kg	1800	650	550

Wall installation	A	B	C
10kg	1170	1300	2200
20kg	700	630	1600
30kg	450	380	1250

Max. Static Torque Table

(Unit : N.m)

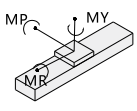

Non-standard, d.c.,	
MY	784
MP	788
MR	691

BR: Right Side

Unit (mm)

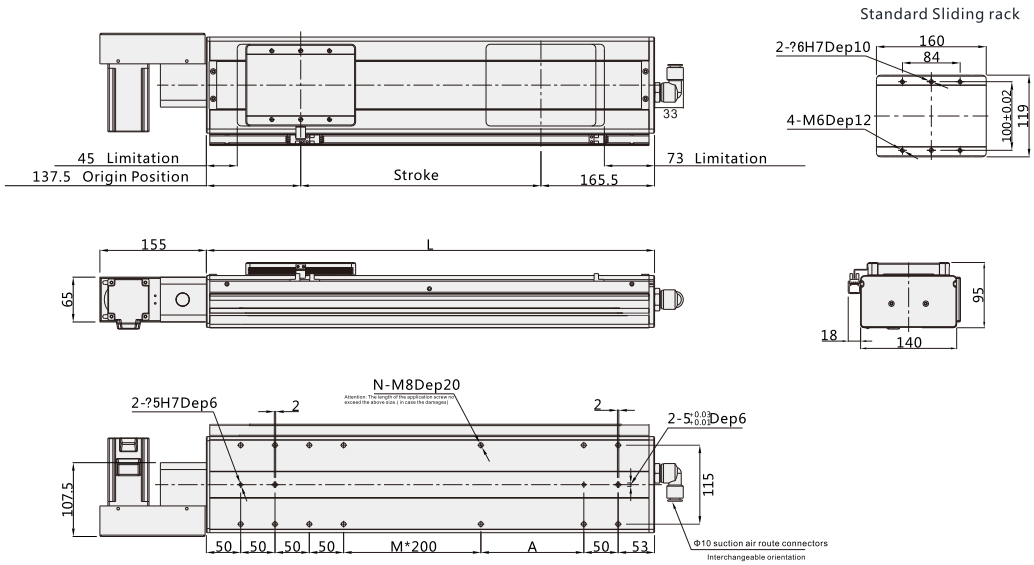

Note: Not including motor weight.

Working Stroke	100	150	200	250	300	350	400	450	500	550	600	650	700	750	800	850	900	950	1000	1050	1100	1150	1200	1250	1300	1350	1400	1450	1500
L	403	453	503	553	603	653	703	753	803	853	903	953	1003	1053	1103	1153	1203	1253	1303	1353	1403	1453	1503	1553	1603	1653	1703	1753	1803
M	0	0	0	1	1	1	1	2	2	2	2	3	3	3	3	4	4	4	4	5	5	5	5	6	6	6	6	7	7
N	12	12	12	14	14	14	14	16	16	16	16	18	18	18	18	20	20	20	20	22	22	22	22	24	24	24	24	26	26
A	100	150	200	50	100	150	200	50	100	150	200	50	100	150	200	50	100	150	200	50	100	150	200	50	100	150	200	50	100
Weight KG	17.2	17.7	18.2	18.7	19.2	19.7	20.2	20.7	21.2	21.7	22.2	22.7	23.2	23.7	24.2	24.7	25.2	25.7	26.2	26.7	27.2	27.7	28.2	28.7	29.2	29.7	30.2	30.7	31.2

*In case special stroke please contact technical services.

BRU: Upper Right Side

Unit (mm)

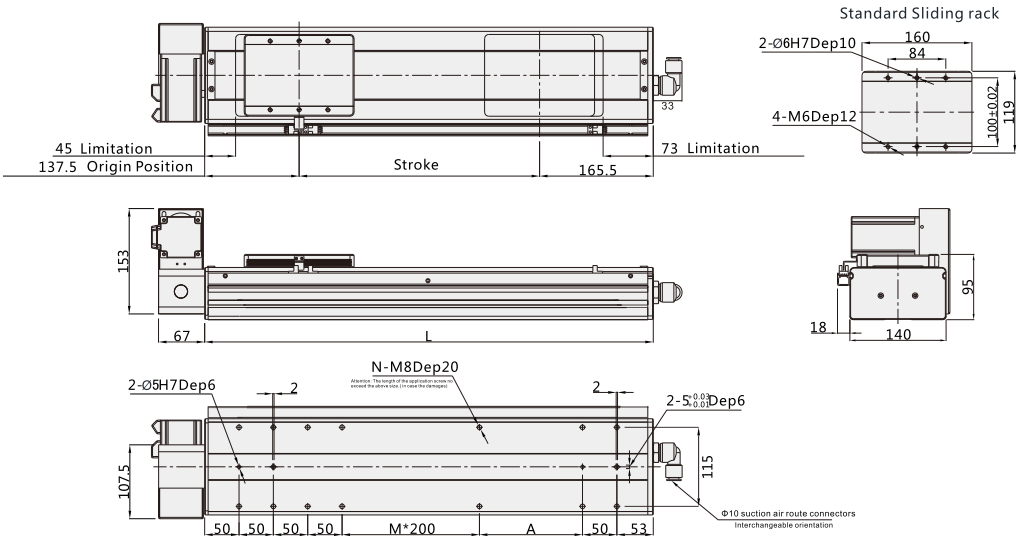

Note: Not including motor weight.

Working Stroke	100	150	200	250	300	350	400	450	500	550	600	650	700	750	800	850	900	950	1000	1050	1100	1150	1200	1250	1300	1350	1400	1450	1500
L	403	453	503	553	603	653	703	753	803	853	903	953	1003	1053	1103	1153	1203	1253	1303	1353	1403	1453	1503	1553	1603	1653	1703	1753	1803
M	0	0	0	1	1	1	1	2	2	2	2	3	3	3	3	4	4	4	4	5	5	5	5	6	6	6	6	7	7
N	12	12	12	14	14	14	14	16	16	16	16	18	18	18	18	20	20	20	20	22	22	22	22	24	24	24	24	26	26
A	100	150	200	50	100	150	200	50	100	150	200	50	100	150	200	50	100	150	200	50	100	150	200	50	100	150	200	50	100
Weight KG	17.2	17.7	18.2	18.7	19.2	19.7	20.2	20.7	21.2	21.7	22.2	22.7	23.2	23.7	24.2	24.7	25.2	25.7	26.2	26.7	27.2	27.7	28.2	28.7	29.2	29.7	30.2	30.7	31.2

*In case special stroke please contact technical services.

VBC14

V-ROBOT® Linear Drives

BRD: Down Right Side

Unit (mm)

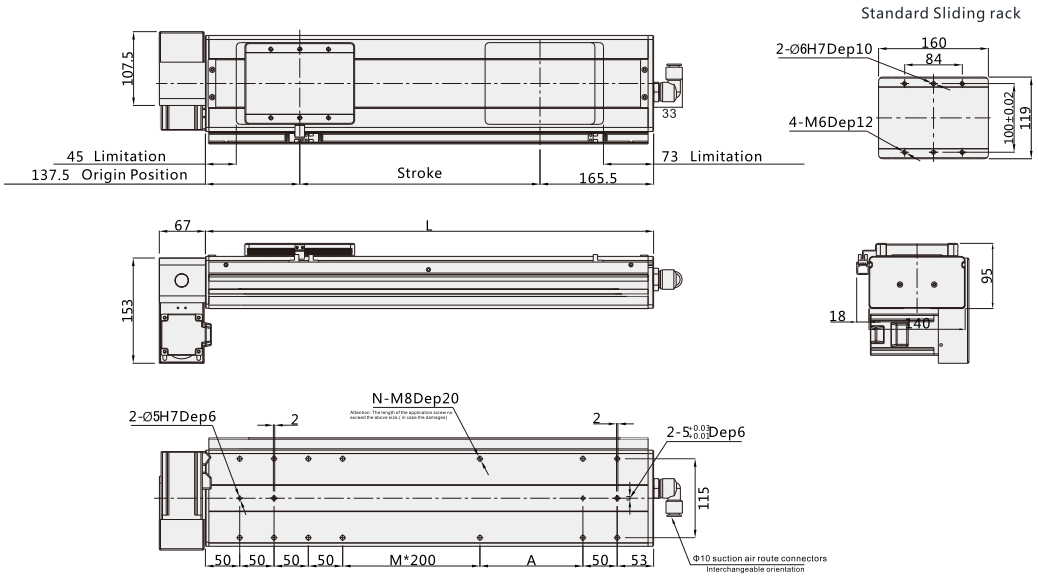

Note: Not including motor weight.

Working Stroke	100	150	200	250	300	350	400	450	500	550	600	650	700	750	800	850	900	950	1000	1050	1100	1150	1200	1250	1300	1350	1400	1450	1500
L	403	453	503	553	603	653	703	753	803	853	903	953	1003	1053	1103	1153	1203	1253	1303	1353	1403	1453	1503	1553	1603	1653	1703	1753	1803
M	0	0	0	1	1	1	1	2	2	2	2	3	3	3	3	4	4	4	4	5	5	5	5	6	6	6	6	7	7
N	12	12	12	14	14	14	14	16	16	16	16	18	18	18	18	20	20	20	20	22	22	22	22	24	24	24	24	26	26
A	100	150	200	50	100	150	200	50	100	150	200	50	100	150	200	50	100	150	200	50	100	150	200	50	100	150	200	50	100
Weight KG	17.2	17.7	18.2	18.7	19.2	19.7	20.2	20.7	21.2	21.7	22.2	22.7	23.2	23.7	24.2	24.7	25.2	25.7	26.2	26.7	27.2	27.7	28.2	28.7	29.2	29.7	30.2	30.7	31.2

*In case special stroke please contact technical services.

BL: Left Side

Unit (mm)

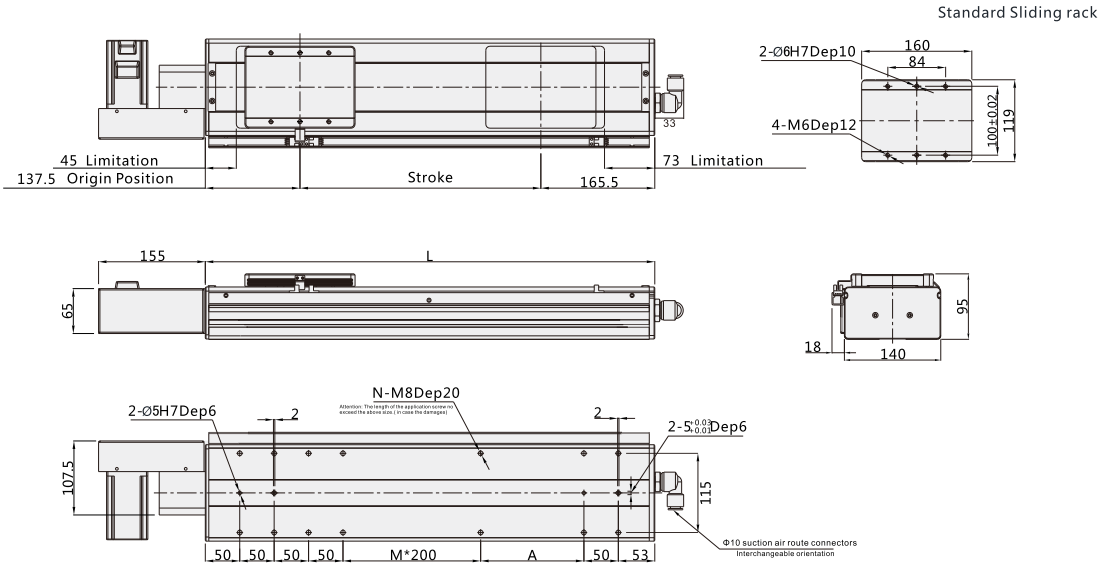

Note: Not including motor weight.

Working Stroke	100	150	200	250	300	350	400	450	500	550	600	650	700	750	800	850	900	950	1000	1050	1100	1150	1200	1250	1300	1350	1400	1450	1500
L	403	453	503	553	603	653	703	753	803	853	903	953	1003	1053	1103	1153	1203	1253	1303	1353	1403	1453	1503	1553	1603	1653	1703	1753	1803
M	0	0	0	1	1	1	1	2	2	2	2	3	3	3	3	4	4	4	4	5	5	5	5	6	6	6	6	7	7
N	12	12	12	14	14	14	14	16	16	16	16	18	18	18	18	20	20	20	20	22	22	22	22	24	24	24	24	26	26
A	100	150	200	50	100	150	200	50	100	150	200	50	100	150	200	50	100	150	200	50	100	150	200	50	100	150	200	50	100
Weight KG	17.2	17.7	18.2	18.7	19.2	19.7	20.2	20.7	21.2	21.7	22.2	22.7	23.2	23.7	24.2	24.7	25.2	25.7	26.2	26.7	27.2	27.7	28.2	28.7	29.2	29.7	30.2	30.7	31.2

*In case special stroke please contact technical services.

BLU: Upper Left Side

Unit (mm)

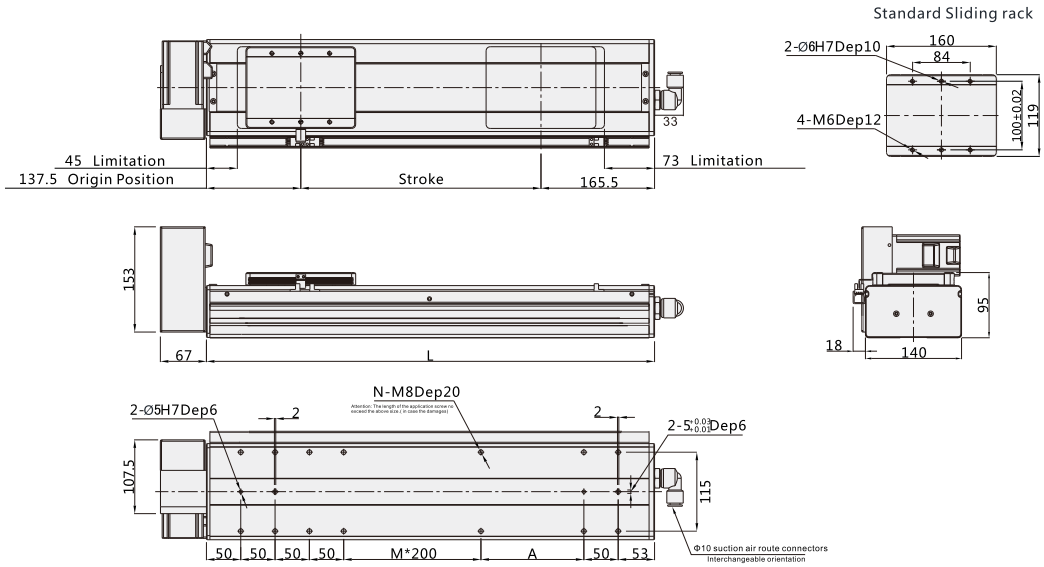

Note: Not including motor weight.

Working Stroke	100	150	200	250	300	350	400	450	500	550	600	650	700	750	800	850	900	950	1000	1050	1100	1150	1200	1250	1300	1350	1400	1450	1500
L	403	453	503	553	603	653	703	753	803	853	903	953	1003	1053	1103	1153	1203	1253	1303	1353	1403	1453	1503	1553	1603	1653	1703	1753	1803
M	0	0	0	1	1	1	1	2	2	2	2	3	3	3	3	4	4	4	4	5	5	5	5	6	6	6	6	7	7
N	12	12	12	14	14	14	14	16	16	16	16	18	18	18	18	20	20	20	20	22	22	22	22	24	24	24	24	26	26
A	100	150	200	50	100	150	200	50	100	150	200	50	100	150	200	50	100	150	200	50	100	150	200	50	100	150	200	50	100
Weight KG	17.2	17.7	18.2	18.7	19.2	19.7	20.2	20.7	21.2	21.7	22.2	22.7	23.2	23.7	24.2	24.7	25.2	25.7	26.2	26.7	27.2	27.7	28.2	28.7	29.2	29.7	30.2	30.7	31.2

*In case special stroke please contact technical services.

BLD: Down Left Side

Unit (mm)

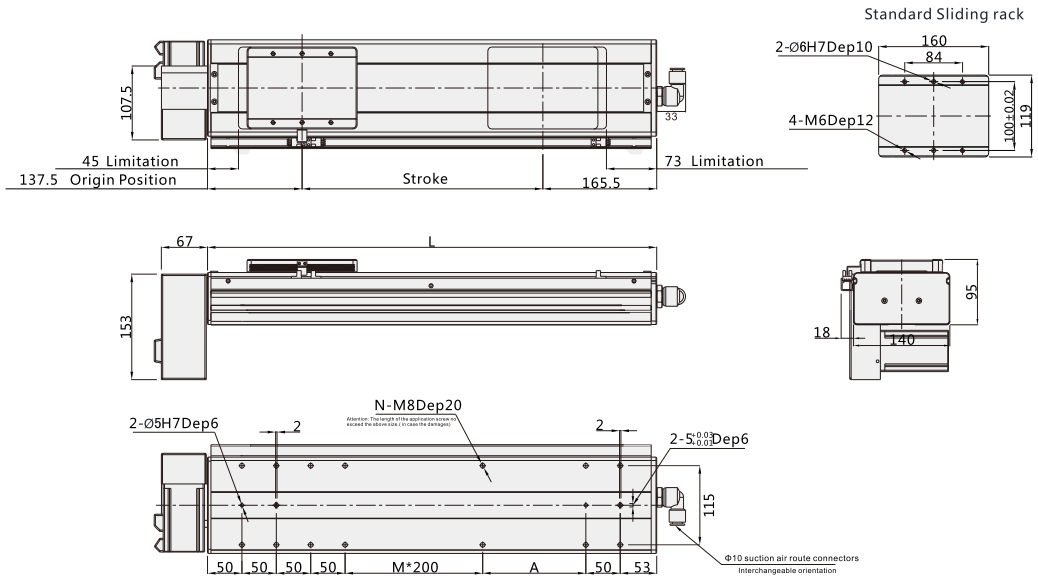

Note: Not including motor weight.

Working Stroke	100	150	200	250	300	350	400	450	500	550	600	650	700	750	800	850	900	950	1000	1050	1100	1150	1200	1250	1300	1350	1400	1450	1500
L	403	453	503	553	603	653	703	753	803	853	903	953	1003	1053	1103	1153	1203	1253	1303	1353	1403	1453	1503	1553	1603	1653	1703	1753	1803
M	0	0	0	1	1	1	1	2	2	2	2	3	3	3	3	4	4	4	4	5	5	5	5	6	6	6	6	7	7
N	12	12	12	14	14	14	14	16	16	16	16	18	18	18	18	20	20	20	20	22	22	22	22	24	24	24	24	26	26
A	100	150	200	50	100	150	200	50	100	150	200	50	100	150	200	50	100	150	200	50	100	150	200	50	100	150	200	50	100
Weight KG	17.2	17.7	18.2	18.7	19.2	19.7	20.2	20.7	21.2	21.7	22.2	22.7	23.2	23.7	24.2	24.7	25.2	25.7	26.2	26.7	27.2	27.7	28.2	28.7	29.2	29.7	30.2	30.7	31.2

*In case special stroke please contact technical services.

VBC17

W-ROBOT® Linear Drives

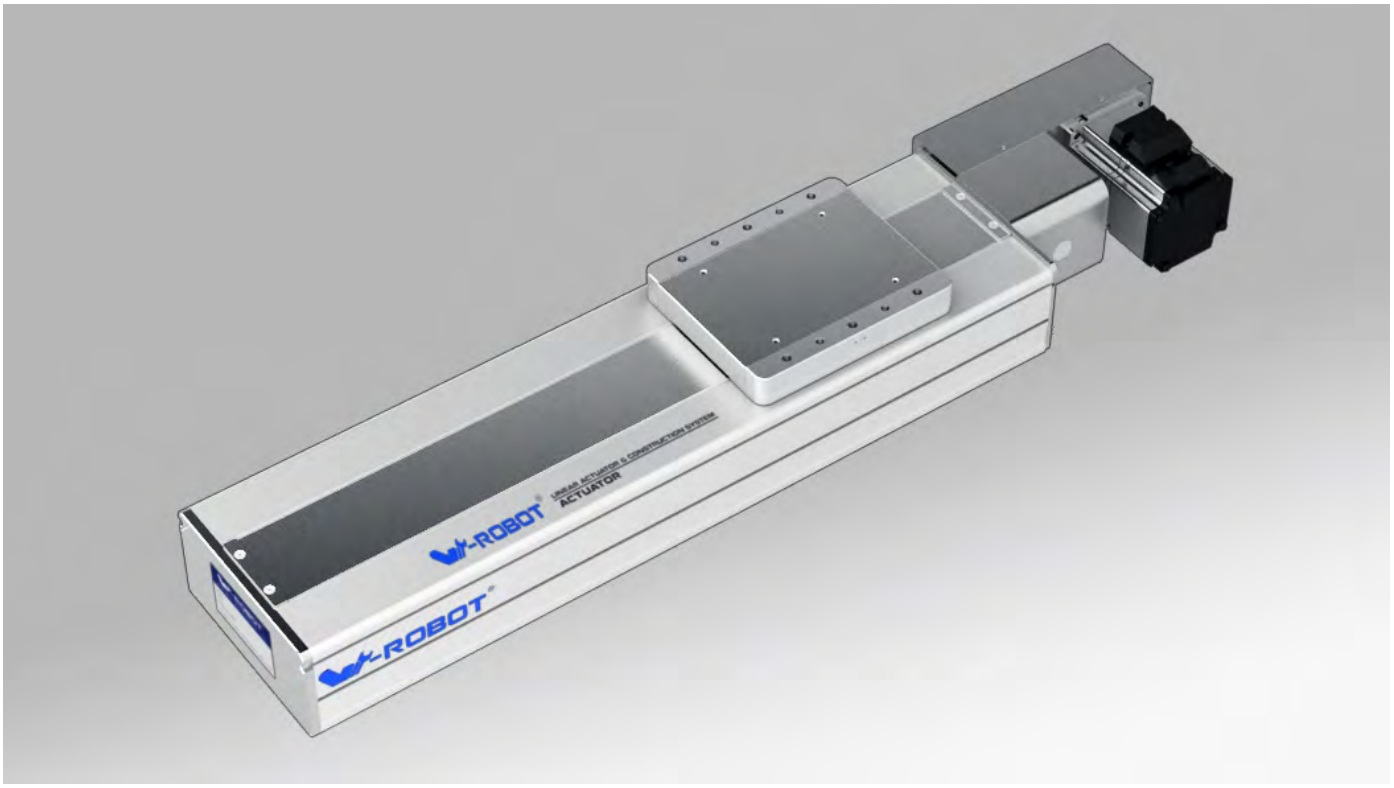

Motor direction

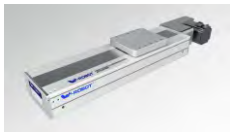
BL

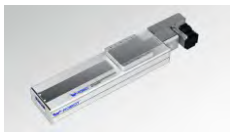
BR

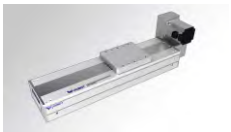
BLU

BLD

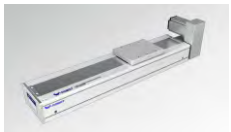
BRU

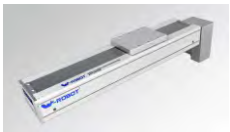
BRD

Guide for Model Selection

VBC17 — L45 — S100 — BL — ZP40B — C3 — ____

Base Style	
V	V series
BC	Cleanse Belt Type
17	Body width170

Leather belt Type	
L	Clean belt
X	Rubber belt
Lead	
45	45mm

Stroke(mm)
100-3500

Motor way	
BR	Right Side
BRU	Upper Right Side
BRD	Down Right Side
BL	Left Side
BLU	Upper Left Side
BLD	Down Left Side

Motor Type		Motor power	
P	Panasonic	40	400W
M	Mitsubishi	75	750W
Y	Yaskawa	Brakes	
T	Delta	No	No brake
* For Z: Motor is from clients		B	With brake

Original Sensor position		Sensor switch	
External		External	
C	Motor side	2	2pcs
D	Oppsite motor side	3	3pcs
E	No	No sensor	

Sensor type	
No	NPN
P	PNP

Non-standard, d.c.,	
No	Standard type
BL1	Detailed information please see page032
B2	
D01	
U01	
UD01	
H01	
HU01	
HD01	
HUD01	
M01	
S01	
T	

If the linear satges require the extra sealing strip,please add the "T"at the end of the model numbers.

Specification

Motor power AC (W)		400W/750W
Drive Type		Timing belt driving
Repeatability		±0.04
Lead(mm)		45
MaximumSpeed(mm/sec) 3000 Motor Speed(rpm/mim)		2250
Maximum Payload(kg)	Horizontal	40/55
	Vertical	
RatedThrust(N)		160/330
Linear Guide (mm)		20x15.5-2
Home Sensor		Outside EE-SX672(NPN) EE-SX672P(PNP)
		Outside Guide EE-SX674(NPN) EE-SX674P(PNP)

Wiring drawing of inductor(original point and endpoint)

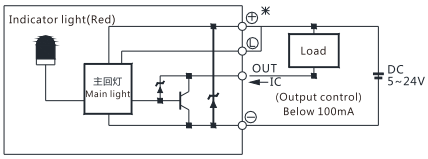

(Figure 1)

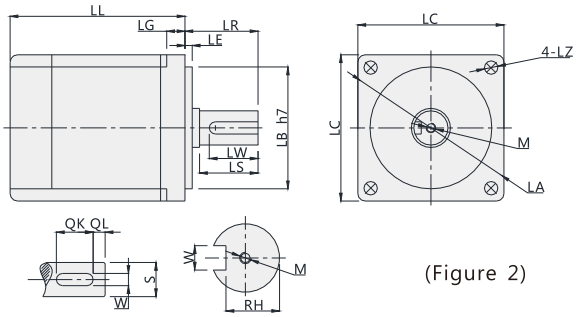

(Figure 2)

Servo Motor Matches List

(Table 1)

Servo motor size																			
Power(W)	Brand	Type		LL	LL(Brakes)	LA	LE	LZ	LC	LG	LW	RH	W	LR	S	LB	M	QK	QL
200W	Panasonic	MHMJ022G1□	V:With brake U:No brake	99	135.5	70	3	4.5	60	6.5	20	8.5	4h9	30	11h6	50h7	M4x8L	-	-
	Delta	ECMA-C20602□S	S:With brake R:No brake	105.5	141.5	70	3	5.5	60	7.5	20	11	5	30	14h6	50h7	M4x15L	-	-
	Mitsubishi	HC-KFS23□K	B:With brake □:No brake	99.5	131.5	70	3	5.8	62	7	-	-	-	30	14h6	50h7	-	-	-
400W	Panasonic	MHMJ042G1□	V:With brake U:No brake	118.5	155.5	70	3	4.5	60	6.5	20	11	5h9	30	14h6	50h7	M5x10L	-	-
	Delta	ECMA-C20604□S	S:With brake R:No brake	130.7	166.6	70	3	5.5	60	7.5	20	11	5	30	14h6	50h7	M4x15L	-	-
		ECMA-C20804□S	S:With brake R:No brake	112.3	152.8	90	3	6.6	80	8	20	11	5	35	14h6	70h7	M4x15L	-	-
	Mitsubishi	HC-KFS43□K	B:With brake □:No brake	124.5	165.5	70	3	5.8	62	7	-	-	-	30	14h6	50h7	-	-	-
750W	Panasonic	MHMJ082G1□	V:With brake U:No brake	127.2	164.2	90	3	6	80	8	25	15.5	6h9	35	19h6	70h7	M5x10L	-	-
	Delta	ECMA-C20807□S	S:With brake R:No brake	138.3	178	90	3	6.6	80	8	25	15.5	6	35	19h6	70h7	M6x20L	-	-
		ECMA-C20907□S	S:With brake R:No brake	130.2	161.3	100	3	6.6	86	8	20	13	5	35	16h6	80h7	M5x15L	-	-
	Mitsubishi	HC-KFS73□K	B:With brake □:No brake	142	177.5	90	3	6.6	82	8	-	-	-	40	19h6	70h7	-	-	-

□ Stand for empty

Max. Payload Diameters Table

(Unit : mm)

Horizontal installation	A	B	C
10kg	3000	1900	1300
20kg	2300	1000	800
30kg	2000	700	600
45kg	900	320	290

Wall installation	A	B	C
10kg	1300	1500	2300
20kg	800	700	1750
30kg	600	450	1350
45kg	290	210	610

Max. Static Torque Table

(Unit : N.m)

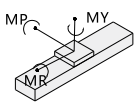

Maximum static torque	
MY	1032
MP	1034
MR	908

VBC17

V-ROBOT® Linear Drives

BR: Right Side

Unit (mm)

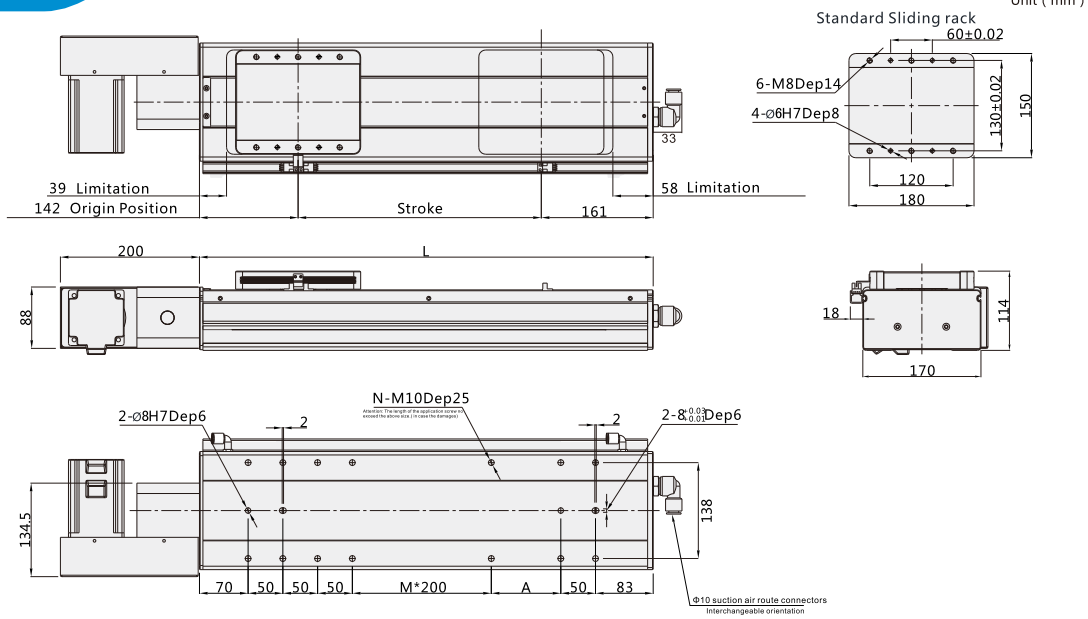

Note: Not including motor weight.

Working Stroke	100	150	200	250	300	350	400	450	500	550	600	650	700	750	800	850	900	950	1000	1050	1100	1150	1200	1250	1300	1350	1400	1450	1500
L	403	453	503	553	603	653	703	753	803	853	903	953	1003	1053	1103	1153	1203	1253	1303	1353	1403	1453	1503	1553	1603	1653	1703	1753	1803
M	0	0	0	0	1	1	1	1	2	2	2	2	3	3	3	3	4	4	4	4	5	5	5	5	6	6	6	6	7
N	12	12	12	12	14	14	14	14	16	16	16	16	18	18	18	18	20	20	20	20	22	22	22	22	24	24	24	24	26
A	50	100	150	200	50	100	150	200	50	100	150	200	50	100	150	200	50	100	150	200	50	100	150	200	50	100	150	200	50
Weight KG	17.7	18.2	18.7	19.2	19.7	20.2	20.7	21.2	21.7	22.2	22.7	23.2	23.7	24.2	24.7	25.2	25.7	26.2	26.7	27.2	27.7	28.2	28.7	29.2	29.7	30.2	30.7	31.2	31.7

*In case special stroke please contact technical services.

BRU: Upper Right Side

Unit (mm)

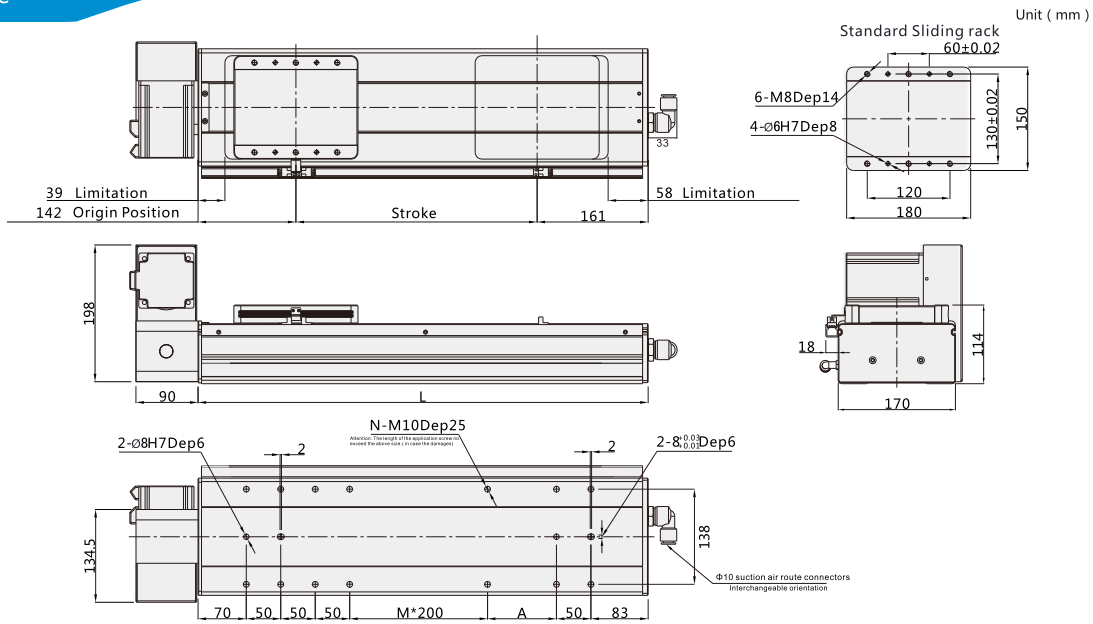

Note: Not including motor weight.

Working Stroke	100	150	200	250	300	350	400	450	500	550	600	650	700	750	800	850	900	950	1000	1050	1100	1150	1200	1250	1300	1350	1400	1450	1500
L	403	453	503	553	603	653	703	753	803	853	903	953	1003	1053	1103	1153	1203	1253	1303	1353	1403	1453	1503	1553	1603	1653	1703	1753	1803
M	0	0	0	0	1	1	1	1	2	2	2	2	3	3	3	3	4	4	4	4	5	5	5	5	6	6	6	6	7
N	12	12	12	12	14	14	14	14	16	16	16	16	18	18	18	18	20	20	20	20	22	22	22	22	24	24	24	24	26
A	50	100	150	200	50	100	150	200	50	100	150	200	50	100	150	200	50	100	150	200	50	100	150	200	50	100	150	200	50
Weight KG	17.7	18.2	18.7	19.2	19.7	20.2	20.7	21.2	21.7	22.2	22.7	23.2	23.7	24.2	24.7	25.2	25.7	26.2	26.7	27.2	27.7	28.2	28.7	29.2	29.7	30.2	30.7	31.2	31.7

*In case special stroke please contact technical services.

BRD: Down Right Side

Unit (mm)

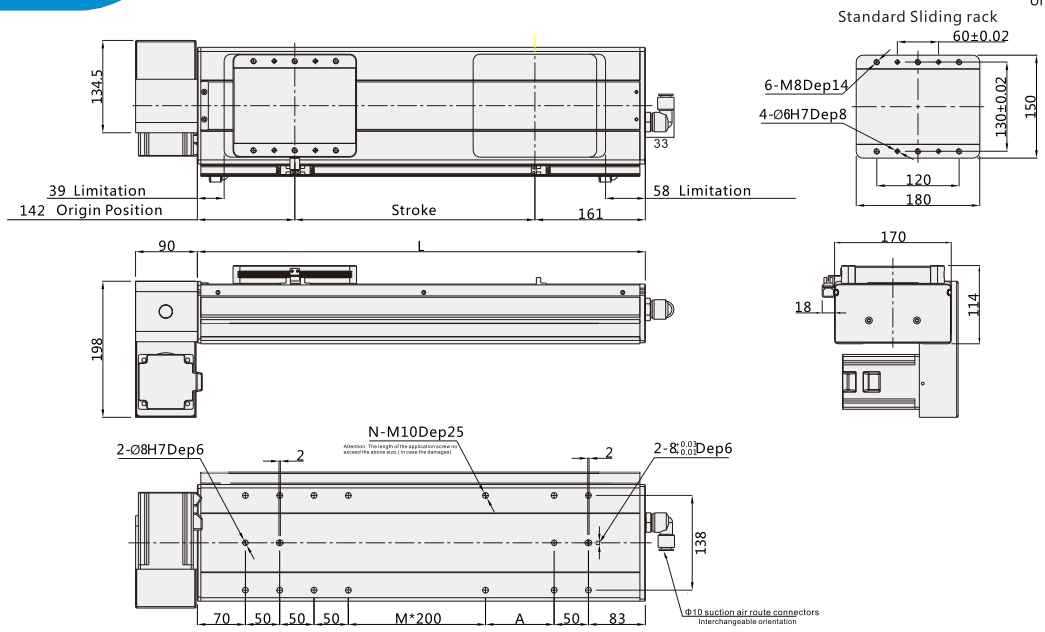

Note: Not including motor weight.

Working Stroke	100	150	200	250	300	350	400	450	500	550	600	650	700	750	800	850	900	950	1000	1050	1100	1150	1200	1250	1300	1350	1400	1450	1500
L	403	453	503	553	603	653	703	753	803	853	903	953	1003	1053	1103	1153	1203	1253	1303	1353	1403	1453	1503	1553	1603	1653	1703	1753	1803
M	0	0	0	0	1	1	1	1	2	2	2	2	3	3	3	3	4	4	4	4	5	5	5	5	6	6	6	6	7
N	12	12	12	12	14	14	14	14	16	16	16	16	18	18	18	18	20	20	20	20	22	22	22	22	24	24	24	24	26
A	50	100	150	200	50	100	150	200	50	100	150	200	50	100	150	200	50	100	150	200	50	100	150	200	50	100	150	200	50
Weight KG	17.7	18.2	18.7	19.2	19.7	20.2	20.7	21.2	21.7	22.2	22.7	23.2	23.7	24.2	24.7	25.2	25.7	26.2	26.7	27.2	27.7	28.2	28.7	29.2	29.7	30.2	30.7	31.2	31.7

*In case special stroke please contact technical services.

BL: Left Side

Unit (mm)

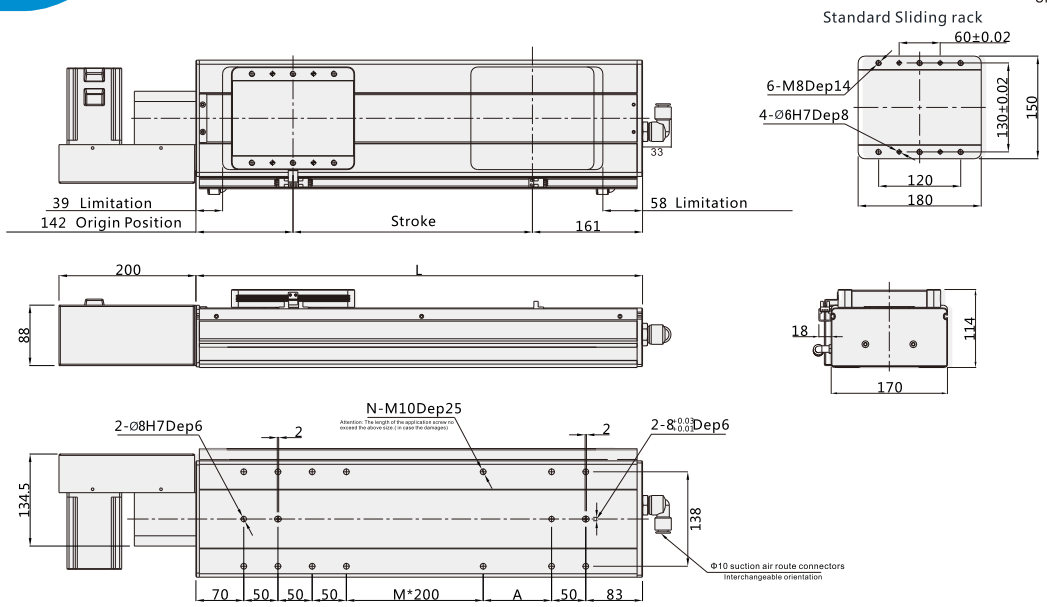

Note: Not including motor weight.

Working Stroke	100	150	200	250	300	350	400	450	500	550	600	650	700	750	800	850	900	950	1000	1050	1100	1150	1200	1250	1300	1350	1400	1450	1500
L	403	453	503	553	603	653	703	753	803	853	903	953	1003	1053	1103	1153	1203	1253	1303	1353	1403	1453	1503	1553	1603	1653	1703	1753	1803
M	0	0	0	0	1	1	1	1	2	2	2	2	3	3	3	3	4	4	4	4	5	5	5	5	6	6	6	6	7
N	12	12	12	12	14	14	14	14	16	16	16	16	18	18	18	18	20	20	20	20	22	22	22	22	24	24	24	24	26
A	50	100	150	200	50	100	150	200	50	100	150	200	50	100	150	200	50	100	150	200	50	100	150	200	50	100	150	200	50
Weight KG	17.7	18.2	18.7	19.2	19.7	20.2	20.7	21.2	21.7	22.2	22.7	23.2	23.7	24.2	24.7	25.2	25.7	26.2	26.7	27.2	27.7	28.2	28.7	29.2	29.7	30.2	30.7	31.2	31.7

*In case special stroke please contact technical services.

VBC17

V-ROBOT® Linear Drives

BLU: Upper Left Side

Unit (mm)

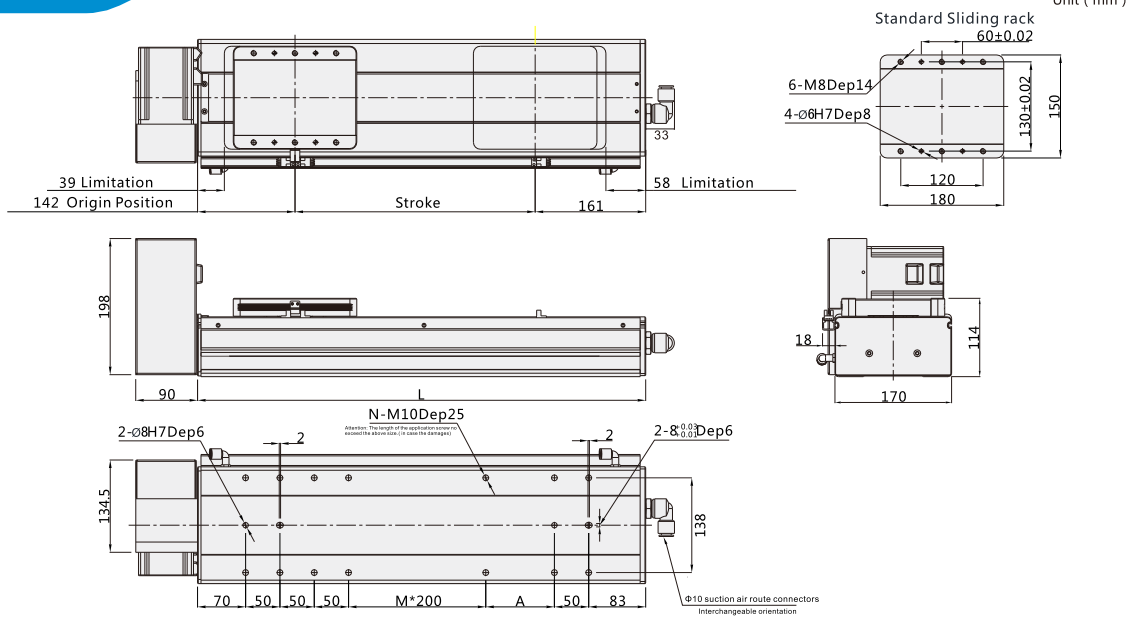

Note: Not including motor weight.

Working Stroke	100	150	200	250	300	350	400	450	500	550	600	650	700	750	800	850	900	950	1000	1050	1100	1150	1200	1250	1300	1350	1400	1450	1500
L	403	453	503	553	603	653	703	753	803	853	903	953	1003	1053	1103	1153	1203	1253	1303	1353	1403	1453	1503	1553	1603	1653	1703	1753	1803
M	0	0	0	0	1	1	1	1	2	2	2	2	3	3	3	3	4	4	4	4	5	5	5	5	6	6	6	6	7
N	12	12	12	12	14	14	14	14	16	16	16	16	18	18	18	18	20	20	20	20	22	22	22	22	24	24	24	24	26
A	50	100	150	200	50	100	150	200	50	100	150	200	50	100	150	200	50	100	150	200	50	100	150	200	50	100	150	200	50
Weight KG	17.7	18.2	18.7	19.2	19.7	20.2	20.7	21.2	21.7	22.2	22.7	23.2	23.7	24.2	24.7	25.2	25.7	26.2	26.7	27.2	27.7	28.2	28.7	29.2	29.7	30.2	30.7	31.2	31.7

*In case special stroke please contact technical services.

BLD: Down Left Side

Unit (mm)

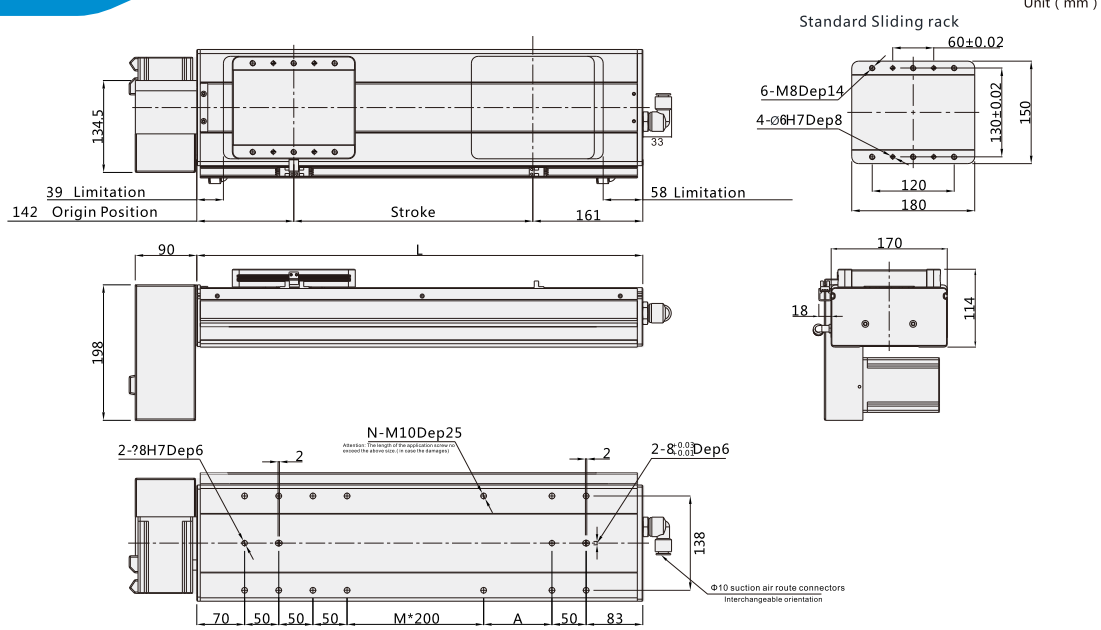

Note: Not including motor weight.

Working Stroke	100	150	200	250	300	350	400	450	500	550	600	650	700	750	800	850	900	950	1000	1050	1100	1150	1200	1250	1300	1350	1400	1450	1500
L	403	453	503	553	603	653	703	753	803	853	903	953	1003	1053	1103	1153	1203	1253	1303	1353	1403	1453	1503	1553	1603	1653	1703	1753	1803
M	0	0	0	0	1	1	1	1	2	2	2	2	3	3	3	3	4	4	4	4	5	5	5	5	6	6	6	6	7
N	12	12	12	12	14	14	14	14	16	16	16	16	18	18	18	18	20	20	20	20	22	22	22	22	24	24	24	24	26
A	50	100	150	200	50	100	150	200	50	100	150	200	50	100	150	200	50	100	150	200	50	100	150	200	50	100	150	200	50
Weight KG	17.7	18.2	18.7	19.2	19.7	20.2	20.7	21.2	21.7	22.2	22.7	23.2	23.7	24.2	24.7	25.2	25.7	26.2	26.7	27.2	27.7	28.2	28.7	29.2	29.7	30.2	30.7	31.2	31.7

*In case special stroke please contact technical services.

Linear Stage Series (European Standard)

Timing Belt Drive Normal Environment

Standard Type

LB6

Economy series

Long stroke

Maximum Stroke 5700mm
Maximum Payload 40KG ····· 169
Body Width 65mm

Installation ways：

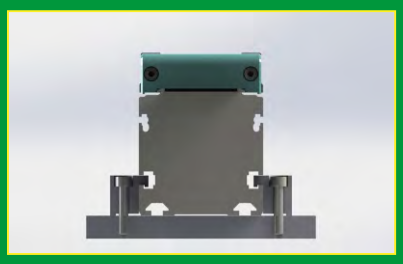

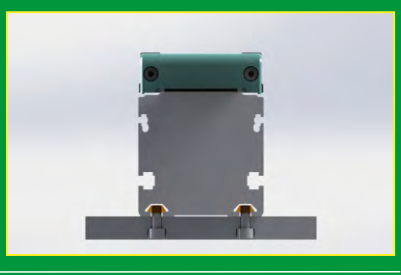

Sensor type：

Magnetic sensor

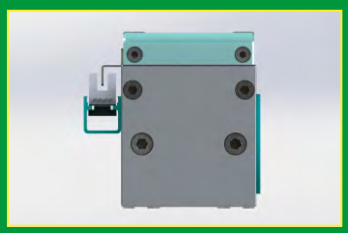

Electronic sensor

Standard Type

LB8

Economy series

Long stroke

Maximum Stroke 5700mm
Maximum Payload 68KG ····· 172
Body Width 80mm

GB5

Long stroke

Maximum Stroke 1500mm
Maximum Payload 5KG ····· 175
Body Width 55mm

GB5Z

Long stroke

Maximum Stroke 1500mm
Maximum Payload Vertical Payload 5KG ····· 178
Body Width 55mm

Standard Type

GB8

Long stroke

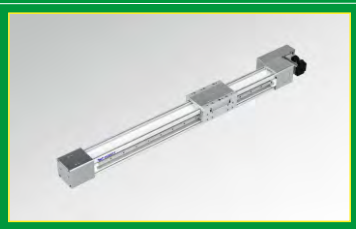

Maximum Stroke 5500mm
Maximum Payload 40KG ····· 181
Body Width 80mm

Standard Type

GB8Z

Maximum Stroke 2000mm
Maximum Payload 15KG ····· 186
Body Width 80mm

LB6

W-ROBOT® Linear Drives

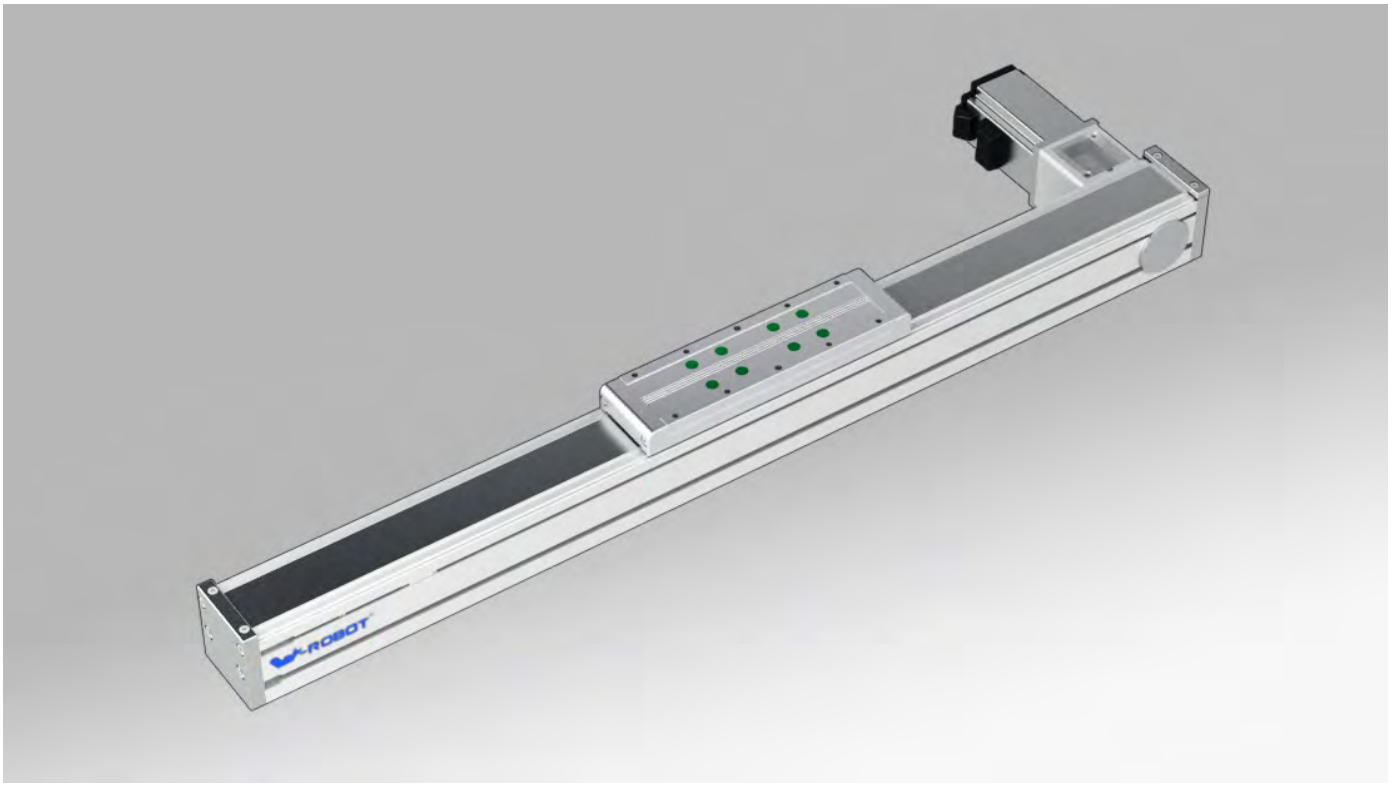

Motor direction

BR

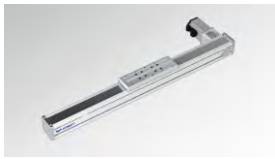

BL

Guide for Model Selection

LB6 — L130 — S100 — BL — ZP40B — C3 — ____

Base Style	
LB	Belt Type
6	Body width60

Leather belt Type	
L	Dust-free belt
Lead	
130	130mm

Stroke(mm)
100-5700

Motor way	
BR	Right Side
BRU	Upper Right Side
BRD	Down Right Side
BL	Left Side
BLU	Upper Left Side
BLD	Down Left Side

Motor Type		Motor power	
P	Panasonic	400	400W
M	Mitsubishi	Brakes	
Y	Yaskawa	No	No brake
T	Delta	B	With brake
* For Z: Motor is from clients			

Sensor		Sensor switch	
C	The electro-optical sensor	3	1pcs
MS	Magnetic sensor	2	2pcs
E	No	1	1pcs

Sensor type	
No	NPN
P	PNP

Non-standard, d.c.,	
No	Standard type
BL1	Detailed information please see page032
B2	
D01	
U01	
UD01	
H01	
HU01	
HD01	
HUD01	
M01	
S01	

LB6

Specification

Motor power AC (W)		400W		
Drive Type		Timing belt driving		
Repeatability		±0.05		
Reduction ratio(Connecting the reduction gears)		无	2	3
Lead(mm)		130	65	43
MaximumSpeed(mm/sec) 3000 Motor Speed(rpm/mim)		5000	3250	2150
Maximum Payload(kg)	Horizontal	*10	*25	*40
	Vertical	*2	*5	*10
RatedThrust(N)		62	111	167
Linear Guide (mm)		15x 9.5		
Diameter of the synchronous wheel		41.38		
Width of the synchronous belt		25		
The allow tension for synchronous belt		*540		
Sensor	The electro-optical sensor	Outside EE-SX672(NPN) EE-SX672P(PNP)		
		Outside Guide EE-SX674(NPN) EE-SX674P(PNP)		
	Magnetic sensor	DS1-HN-020		

m sec2

*We suggestion the accelerated velocity under the 5m/sec2 when reaching to the maximum payload horizontally, 2m/sec2 for the maximum payload vertically.

*The allow tension of the synchronous belt remarked as the standard parameters for the synchronous belt.(polyurethane (PU) + high-tensile steel wires)

*Please attention the allow tension of the synchronous belt by vertically working.(Increase the reduction ratio of the reduction gear increases the rated thrust).

Acceleration—Payload

Horizontal - 400W Servo motor

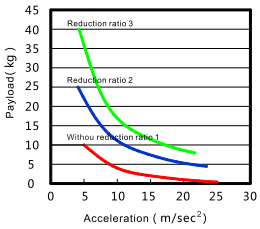

(Figure 1)

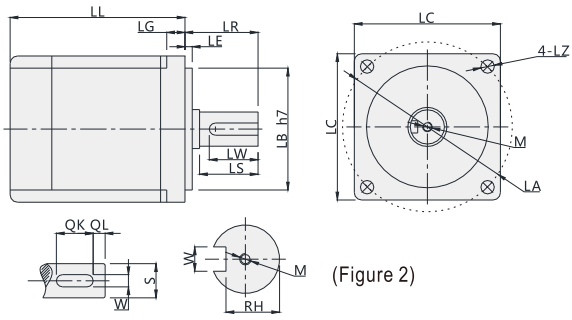

(Figure 2)

Servo Motor Matches List

(Table 1)

Servo motor size																			
Power(W)	Brand	Type		LL	LL(Brakes)	LA	LE	LZ	LC	LG	LW	RH	W	LR	S	LB	M	QK	QL
400W	Panasonic	MHMJ042G1□	V:With brake U:No brake	118.5	155.5	70	3	4.5	60	6.5	20	11	5h9	30	14h6	50h7	M5x10L	-	-
	Delta	ECMA-C20604□S	S:With brake R:No brake	130.7	166.6	70	3	5.5	60	7.5	20	11	5	30	14h6	50h7	M4x15L	-	-
		ECMA-C20804□S	S:With brake R:No brake	112.3	152.8	90	3	6.6	80	8	20	11	5	35	14h6	70h7	M4x15L	-	-
	Mitsubishi	HC-KFS43□K	B:With brake □:No brake	124.5	165.5	70	3	5.8	62	7	-	-	-	30	14h6	50h7	-	-	-
750W	Panasonic	MHMJ082G1□	V:With brake U:No brake	127.2	164.2	90	3	6	80	8	25	15.5	6h9	35	19h6	70h7	M5x10L	-	-
	Delta	ECMA-C20807□S	S:With brake R:No brake	138.3	178	90	3	6.6	80	8	25	15.5	6	35	19h6	70h7	M6x20L	-	-
		ECMA-C20907□S	S:With brake R:No brake	130.2	161.3	100	3	6.6	86	8	20	13	5	35	16h6	80h7	M5x15L	-	-
	Mitsubishi	HC-KFS73□K	B:With brake □:No brake	142	177.5	90	3	6.6	82	8	-	-	-	40	19h6	70h7	-	-	-

□ Stand for empty

Max. Payload Diameters Table

(Unit : mm)

Horizontal installation	A	B	C
7kg	500	200	200
25kg	400	150	100
40kg	400	150	80

Wall installation	A	B	C
7kg	200	200	500
25kg	100	150	400
40kg	80	150	400

Max. Static Torque Table

(Unit : N.m)

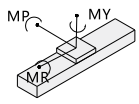

Maximum static torque	
MY	242
MP	242
MR	70

BL: Left Side

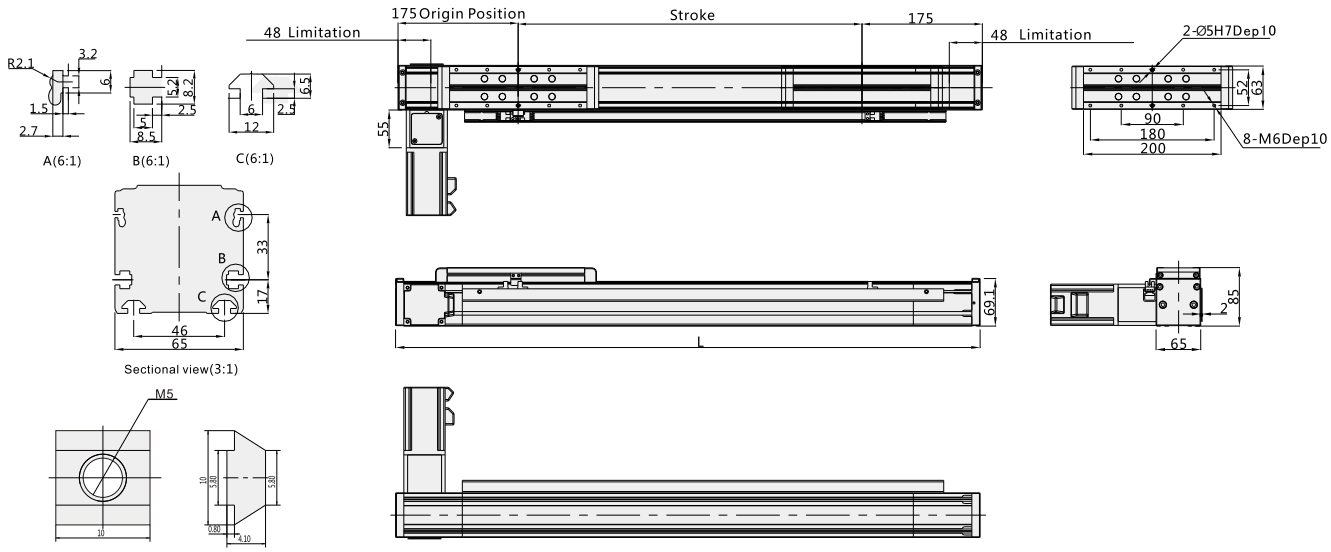

Note: Not including motor weight.

Working Stroke	100	150	200	250	300	350	400	450	500	550	600	650	700	750	800	850	900	950	1000	1050	1100	1150	1200	1250	1300	1350	1400	1450	1500
L	450	500	550	600	650	700	750	800	850	900	950	1000	1050	1100	1150	1200	1250	1300	1350	1400	1450	1500	1550	1600	1650	1700	1750	1800	1850
Weight KG	5.6	5.9	6.2	6.5	6.8	7.1	7.4	7.7	8	8.3	8.6	8.9	9.2	9.5	9.8	10.1	10.4	10.7	11	11.3	11.6	11.9	12.2	12.5	12.8	13.1	13.4	13.7	14
Working Stroke	1600	1700	1800	1900	2000	2100	2200	2300	2400	2500	2600	2700	2800	2900	3000	3100	3200	3300	3400	3500	3600	3700	3800	3900	4000	4100	4200	···	5700
L	1950	2050	2150	2250	2350	2450	2550	2650	2750	2850	2950	3050	3150	3250	3350	3450	3550	3650	3750	3850	3950	4050	4150	4250	4350	4450	4550	···	6050
Weight KG	14.6	15.2	15.8	16.4	17	17.6	18.2	18.8	19.4	20	20.6	21.2	21.8	22.4	23	23.6	24.2	24.8	25.4	26	26.6	27.2	27.8	28.4	29	29.6	30.2	···	39.2

*In case special stroke please contact technical services.

BR: Right Side

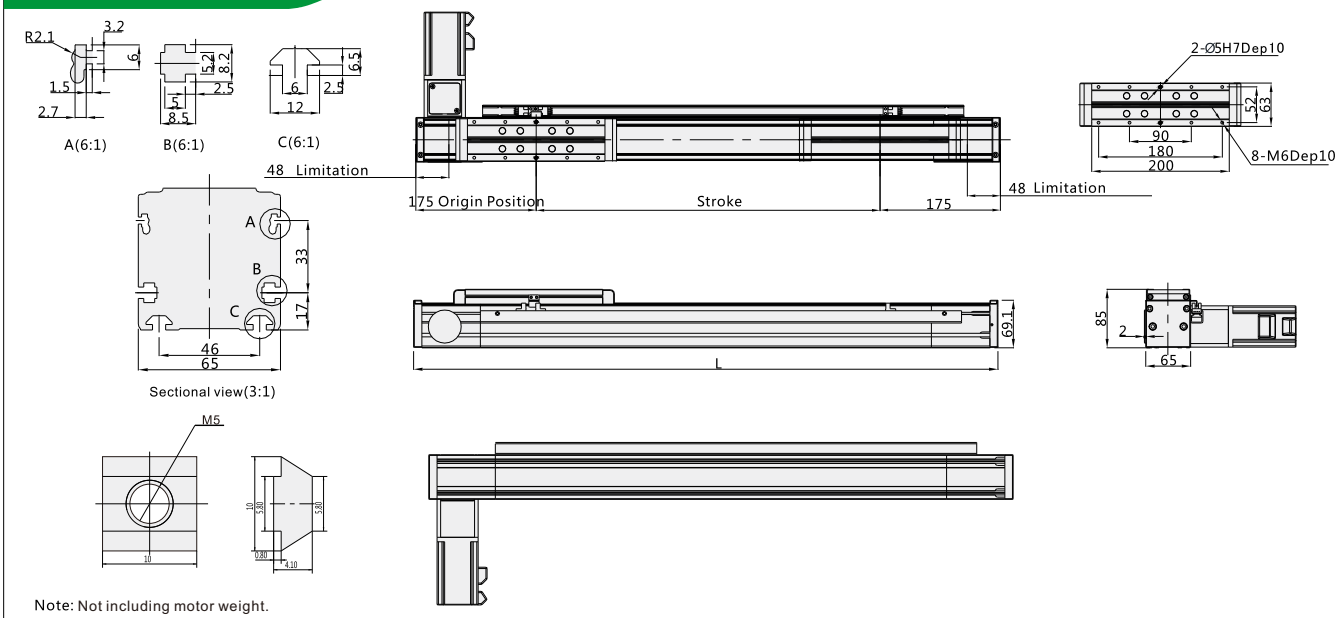

Note: Not including motor weight.

Working Stroke	100	150	200	250	300	350	400	450	500	550	600	650	700	750	800	850	900	950	1000	1050	1100	1150	1200	1250	1300	1350	1400	1450	1500
L	450	500	550	600	650	700	750	800	850	900	950	1000	1050	1100	1150	1200	1250	1300	1350	1400	1450	1500	1550	1600	1650	1700	1750	1800	1850
Weight KG	5.6	5.9	6.2	6.5	6.8	7.1	7.4	7.7	8	8.3	8.6	8.9	9.2	9.5	9.8	10.1	10.4	10.7	11	11.3	11.6	11.9	12.2	12.5	12.8	13.1	13.4	13.7	14
Working Stroke	1600	1700	1800	1900	2000	2100	2200	2300	2400	2500	2600	2700	2800	2900	3000	3100	3200	3300	3400	3500	3600	3700	3800	3900	4000	4100	4200	···	5700
L	1950	2050	2150	2250	2350	2450	2550	2650	2750	2850	2950	3050	3150	3250	3350	3450	3550	3650	3750	3850	3950	4050	4150	4250	4350	4450	4550	···	6050
Weight KG	14.6	15.2	15.8	16.4	17	17.6	18.2	18.8	19.4	20	20.6	21.2	21.8	22.4	23	23.6	24.2	24.8	25.4	26	26.6	27.2	27.8	28.4	29	29.6	30.2	···	39.2

*In case special stroke please contact technical services.

LB8

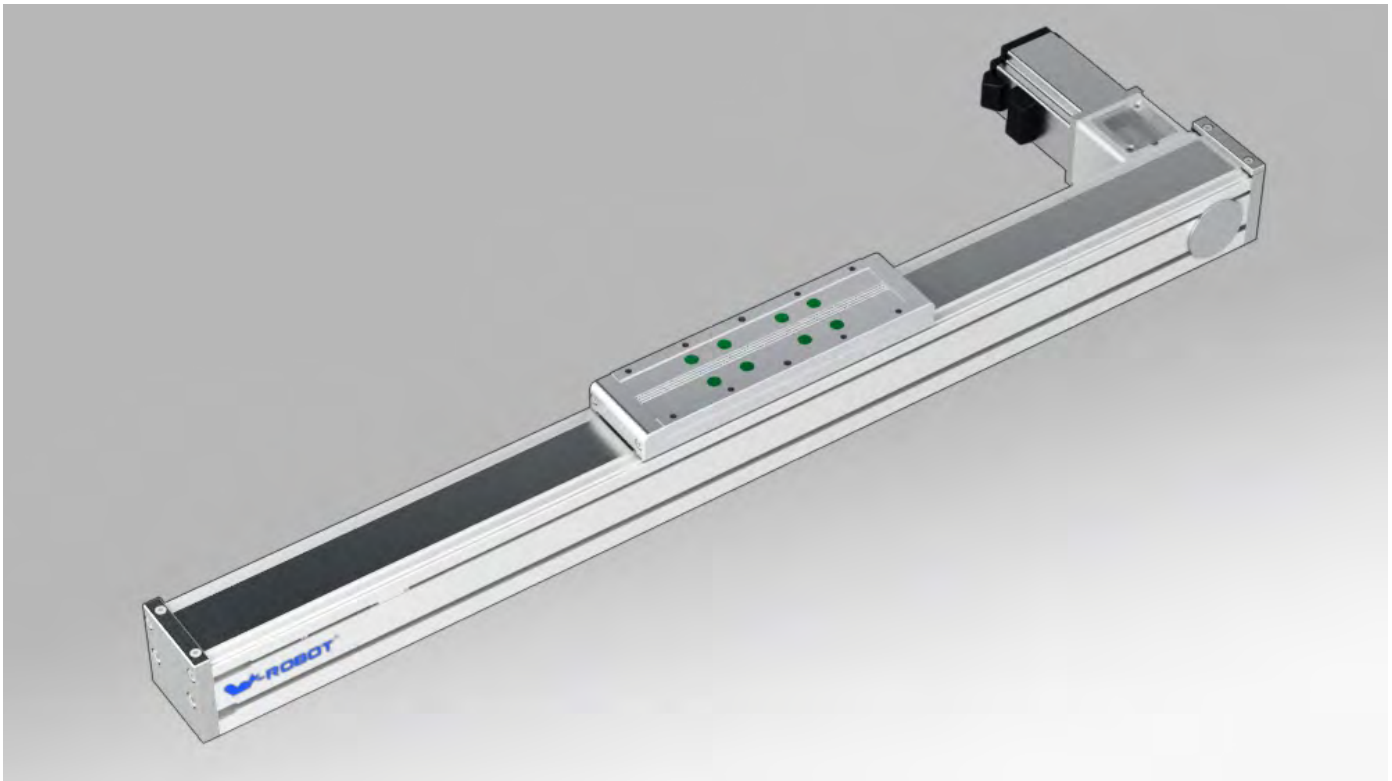

Motor direction

BR

BL

Guide for Model Selection

LB8 — L150 — S100 — BL — ZP75B — C3 — ____

Base Style	
LB	Belt Type
8	Body width80

Leather belt Type	
L	Dust-free belt
Lead	
150	150mm

Stroke(mm)
100-5700

Motor way	
BR	Right Side
BRU	Upper Right Side
BRD	Down Right Side
BL	Left Side
BLU	Upper Left Side
BLD	Down Left Side

Motor Type	
P	Panasonic
M	Mitsubishi
Y	Yaskawa
T	Delta
* For Z: Motor is from clients	

Motor power	
75	750W
Brakes	
No	No brake
B	With brake

Sensor	
C	The electro-optical sensor
MS	Magnetic sensor
E	No

Sensor switch	
3	1pcs
2	2pcs
1	1pcs

Sensor type	
No	NPN
P	PNP

Non-standard, d.c.,	
No	Standard type
BL1	Detailed information please see page032
B2	
D01	
U01	
UD01	
H01	
HU01	
HD01	
HUD01	
M01	
S01	

Specification

Motor power AC (W)		750W	
Drive Type		Timing belt driving	
Repeatability		±0.05	
Reduction ratio(Connecting the reduction gears)		无	2
Lead(mm)		150	75
MaximumSpeed(mm/sec) 3000 Motor Speed(rpm/mim)		5000	3750
Maximum Payload(kg)	Horizontal	*30	*68
	Vertical	*6	*12
RatedThrust(N)		90	170
Linear Guide (mm)		20x 15.5	
Diameter of the synchronous wheel		47.75	
Width of the synchronous belt		35	
The allow tension for synchronous belt		*754	
Sensor	The electro-optical sensor	Outside EE-SX672(NPN) EE-SX672P(PNP)	
		Outside Guide EE-SX674(NPN) EE-SX674P(PNP)	
	Magnetic sensor	DS1-HN-020	

Acceleration—Payload

Horizontal - 750W Servo motor

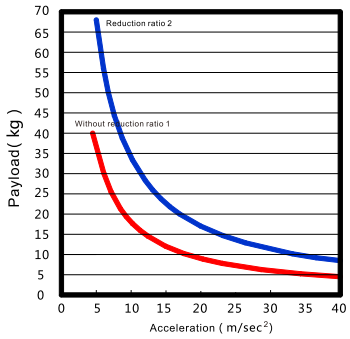

(Figure 1)

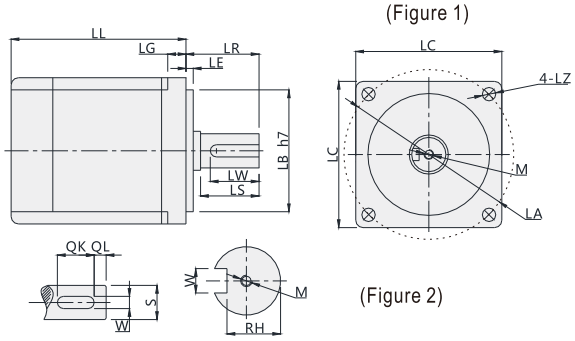

(Figure 2)

*We suggestion the accelerated velocity under the 5m/sec2 when reaching to the maximum payload horizontally, 2m/sec2 for the maximum payload vertically.

*The allow tension of the synchronous belt remarked as the standard parameters for the synchronous belt.(polyurethane (PU) + high-tensile steel wires)

*Please attention the allow tension of the synchronous belt by vertically working.(Increase the reduction ratio of the reduction gear increases the rated thrust).

Servo Motor Matches List

(Table 1)

Servo motor size																			
Power(W)	Brand	Type		LL	LL(Brakes)	LA	LE	LZ	LC	LG	LW	RH	W	LR	S	LB	M	QK	QL
400W	Panasonic	MHMJ042G1□	V:With brake U:No brake	118.5	155.5	70	3	4.5	60	6.5	20	11	5h9	30	14h6	50h7	M5x10L	-	-
	Delta	ECMA-C20604□S	S:With brake R:No brake	130.7	166.6	70	3	5.5	60	7.5	20	11	5	30	14h6	50h7	M4x15L	-	-
		ECMA-C20804□S	S:With brake R:No brake	112.3	152.8	90	3	6.6	80	8	20	11	5	35	14h6	70h7	M4x15L	-	-
	Mitsubishi	HC-KFS43□K	B:With brake □:No brake	124.5	165.5	70	3	5.8	62	7	-	-	-	30	14h6	50h7	-	-	-
750W	Panasonic	MHMJ082G1□	V:With brake U:No brake	127.2	164.2	90	3	6	80	8	25	15.5	6h9	35	19h6	70h7	M5x10L	-	-
	Delta	ECMA-C20807□S	S:With brake R:No brake	138.3	178	90	3	6.6	80	8	25	15.5	6	35	19h6	70h7	M6x20L	-	-
		ECMA-C20907□S	S:With brake R:No brake	130.2	161.3	100	3	6.6	86	8	20	13	5	35	16h6	80h7	M5x15L	-	-
	Mitsubishi	HC-KFS73□K	B:With brake □:No brake	142	177.5	90	3	6.6	82	8	-	-	-	40	19h6	70h7	-	-	-

Max. Payload Diameters Table

(Unit : mm)

Horizontal installation	A	B	C
40kg	500	200	200
68kg	400	150	100

Wall installation	A	B	C
40kg	200	200	500
68kg	100	150	400

Max. Static Torque Table

(Unit : N.m)

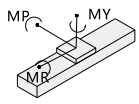

Maximum static torque	
MY	326
MP	326
MR	94

LB8

BL: Left Side

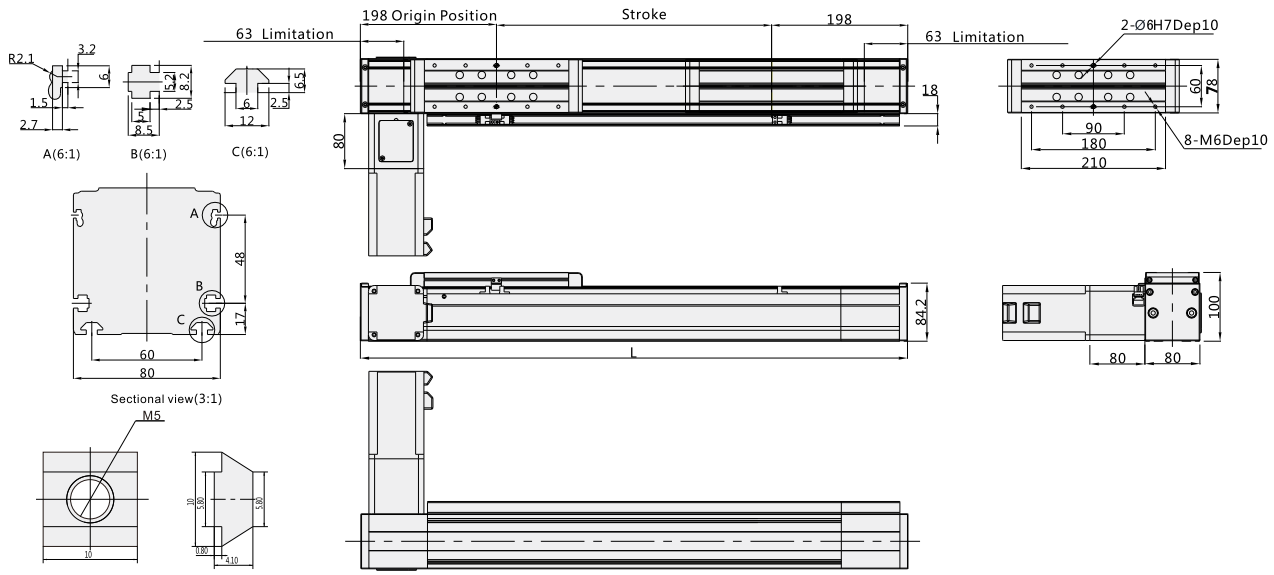

Note: Not including motor weight.

Working Stroke	100	150	200	250	300	350	400	450	500	550	600	650	700	750	800	850	900	950	1000	1050	1100	1150	1200	1250	1300	1350	1400	1450	1500
L	496	546	596	646	696	746	796	846	896	946	996	1046	1096	1146	1196	1246	1296	1346	1396	1446	1496	1546	1596	1646	1696	1746	1796	1846	1896
Weight KG	9.5	10	10.5	11	11.5	12	12.5	13	13.5	14	14.5	15	15.5	16	16.5	17	17.5	18	18.5	19	19.5	20	20.5	21	21.5	22	22.5	23	23.5
Working Stroke	1600	1700	1800	1900	2000	2100	2200	2300	2400	2500	2600	2700	2800	2900	3000	3100	3200	3300	3400	3500	3600	3700	3800	3900	4000	4100	4200	···	5700
L	1996	2096	2196	2296	2396	2496	2596	2696	2796	2896	2996	3096	3196	3296	3396	3496	3596	3696	3796	3896	3996	4096	4196	4296	4396	4496	4596	···	6096
Weight KG	24.5	25.5	26.5	27.5	28.5	29.5	30.5	31.5	32.5	33.5	34.5	35.5	36.5	37.5	38.5	39.5	40.5	41.5	42.5	43.5	44.5	45.5	46.5	47.5	48.5	49.5	50.5	···	65.5

*In case special stroke please contact technical services.

BR: Right Side

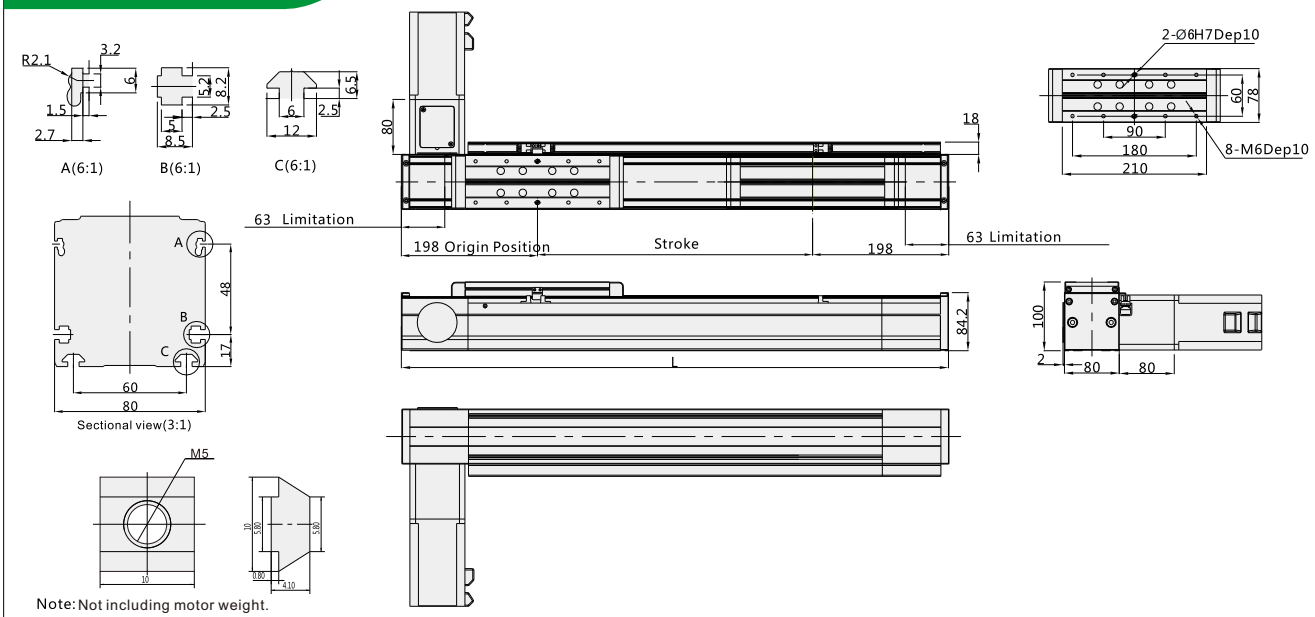

Note: Not including motor weight.

Working Stroke	100	150	200	250	300	350	400	450	500	550	600	650	700	750	800	850	900	950	1000	1050	1100	1150	1200	1250	1300	1350	1400	1450	1500
L	496	546	596	646	696	746	796	846	896	946	996	1046	1096	1146	1196	1246	1296	1346	1396	1446	1496	1546	1596	1646	1696	1746	1796	1846	1896
Weight KG	9.5	10	10.5	11	11.5	12	12.5	13	13.5	14	14.5	15	15.5	16	16.5	17	17.5	18	18.5	19	19.5	20	20.5	21	21.5	22	22.5	23	23.5
Working Stroke	1600	1700	1800	1900	2000	2100	2200	2300	2400	2500	2600	2700	2800	2900	3000	3100	3200	3300	3400	3500	3600	3700	3800	3900	4000	4100	4200	···	5700
L	1996	2096	2196	2296	2396	2496	2596	2696	2796	2896	2996	3096	3196	3296	3396	3496	3596	3696	3796	3896	3996	4096	4196	4296	4396	4496	4596	···	6096
Weight KG	24.5	25.5	26.5	27.5	28.5	29.5	30.5	31.5	32.5	33.5	34.5	35.5	36.5	37.5	38.5	39.5	40.5	41.5	42.5	43.5	44.5	45.5	46.5	47.5	48.5	49.5	50.5	···	65.5

*In case special stroke please contact technical services.

GB5

W-ROBOT® Linear Drives

Motor direction

BR

BL

Guide for Model Selection

GB5 — L72 — S100 — BL — ZP20B — D3 — ____

Base Style	
Semiclosed with Frame Belt Type	
5	Body width55

Leather belt Type	
L	Clean belt
Lead	
72	72mm

Stroke(mm)
100-1500

Motor way	
BR	Right Side
BL	Left Side

Motor Type		Motor power	
P	Panasonic	20	200W
M	Mitsubishi	57	57 Stepper
Y	Yaskawa	Brakes	
T	Delta	No	No brake
* For Z: Motor is from clients		B	With brake

Original Sensor position		Limit Sensor Qty	
Ecxternal		Ecxternal	
C	Motor side	3	3pcs
D	Oppsite motor side	2	2pcs
E	No	No sensor	

Sensor type	
No	NPN
P	PNP

Non-standard, d.c.,	
No	Standard type
BL1	Detailed information please see page032
B2	
D01	
U01	
UD01	
H01	
HU01	
HD01	
HUD01	
M01	
S01	

Specification

AC (W) Motor power AC (W)		200W
Drive Type		Timing belt driving
Repeatability		±0.08
Lead(mm)		72
MaximumSpeed(mm/sec) 3000 Motor Speed(rpm/mim)		3600
Maximum Payload(kg)	Horizontal	5
	Vertical	
RatedThrust(N)		55
Diameter of the synchronous wheel		22.9
Width of the synchronous belt		15
The allow tension for synchronous belt		159
Linear Guide (mm)		Ø6
Home Sensor		Outside EE-SX671(NPN) EE-SX671P(PNP)

Wiring drawing of inductor(original point and endpoint)

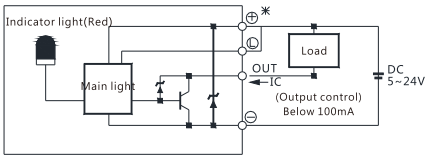

(Figure 1)

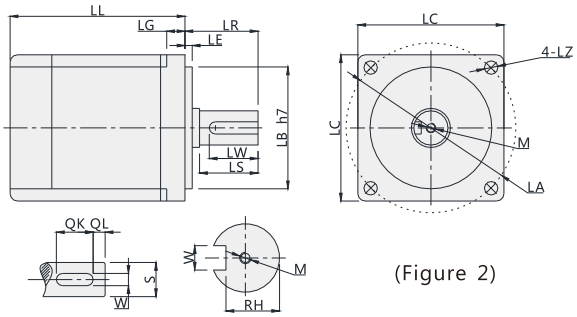

(Figure 2)

Servo Motor Matches List

(Table 1)

Servo motor size																			
Power(W)	Brand	Type		LL	LL(Brakes)	LA	LE	LZ	LC	LG	LW	RH	W	LR	S	LB	M	QK	QL
200W	Panasonic	MHMJ022G1□	V:With brake U:No brake	99	135.5	70	3	4.5	60	6.5	20	8.5	4h9	30	11h6	50h7	M4x8L	-	-
	Delta	ECMA-C20602□S	S:With brake R:No brake	105.5	141.5	70	3	5.5	60	7.5	20	11	5	30	14h6	50h7	M4x15L	-	-
	Mitsubishi	HC-KFS23□K	B:With brake □:No brake	99.5	131.5	70	3	5.8	62	7	-	-	-	30	14h6	50h7	-	-	-
400W	Panasonic	MHMJ042G1□	V:With brake U:No brake	118.5	155.5	70	3	4.5	60	6.5	20	11	5h9	30	14h6	50h7	M5x10L	-	-
	Delta	ECMA-C20604□S	S:With brake R:No brake	130.7	166.6	70	3	5.5	60	7.5	20	11	5	30	14h6	50h7	M4x15L	-	-
		ECMA-C20804□S	S:With brake R:No brake	112.3	152.8	90	3	6.6	80	8	20	11	5	35	14h6	70h7	M4x15L	-	-
	Mitsubishi	HC-KFS43□K	B:With brake □:No brake	124.5	165.5	70	3	5.8	62	7	-	-	-	30	14h6	50h7	-	-	-

□ Stand for empty

Max. Payload Diameters Table

(Unit : mm)

Horizontal installation	A	B	C
5kg	300	200	180

Wall installation	A	B	C
5kg	200	150	300

Max. Static Torque Table

(Unit : N.m)

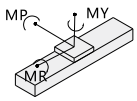

Maximum static torque	
MY	35
MP	70
MR	50

BL: Left Side

Unit (mm)

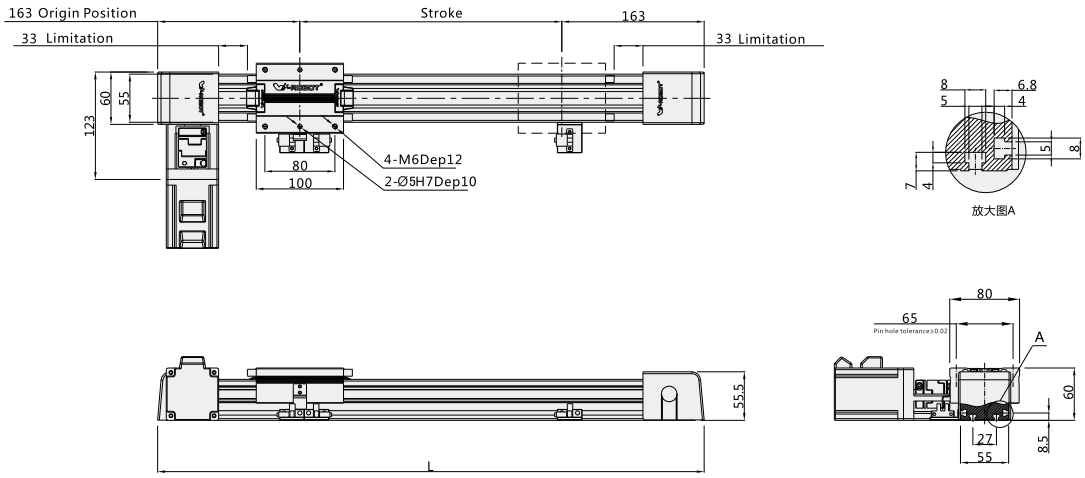

Note: Not including motor weight.

Working Stroke	100	150	200	250	300	350	400	450	500	550	600	650	700	750	800	850	900	950	1000	1050	1100	1150	1200	1250	1300	1350	1400	1450	1500
L	426	476	526	576	626	676	726	776	826	876	926	976	1026	1076	1126	1176	1226	1276	1326	1376	1426	1476	1526	1576	1626	1676	1726	1776	1826
Weight KG	2.78	3.02	3.26	3.5	3.74	3.96	4.2	4.44	4.7	4.94	5.42	5.66	5.9	6.14	6.38	6.62	6.86	7.1	7.34	7.58	7.82	8.06	8.3	8.54	8.78	9.02	9.26	9.5	9.74

*In case special stroke please contact technical services.

BR: Right Side

Unit (mm)

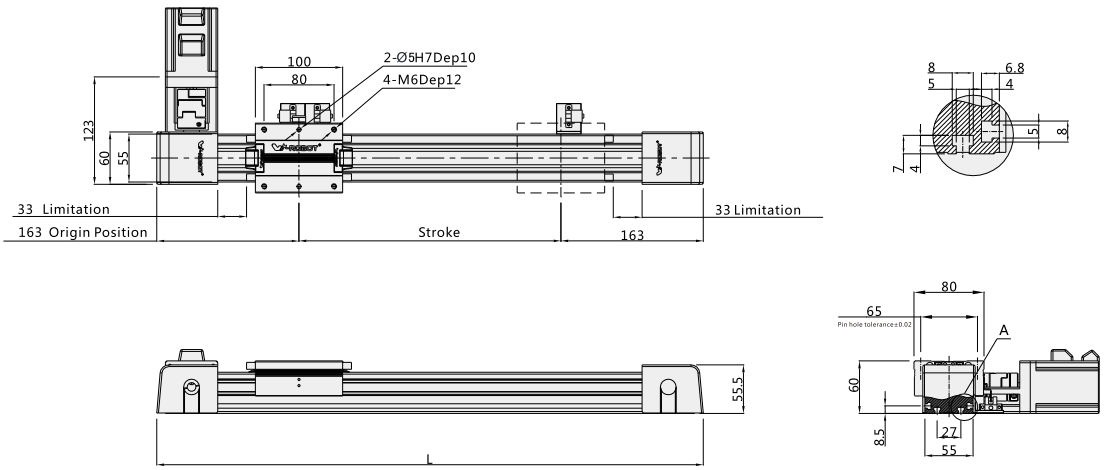

Note: Not including motor weight.

Working Stroke	100	150	200	250	300	350	400	450	500	550	600	650	700	750	800	850	900	950	1000	1050	1100	1150	1200	1250	1300	1350	1400	1450	1500
L	426	476	526	576	626	676	726	776	826	876	926	976	1026	1076	1126	1176	1226	1276	1326	1376	1426	1476	1526	1576	1626	1676	1726	1776	1826
Weight KG	2.78	3.02	3.26	3.5	3.74	3.96	4.2	4.44	4.7	4.94	5.42	5.66	5.9	6.14	6.38	6.62	6.86	7.1	7.34	7.58	7.82	8.06	8.3	8.54	8.78	9.02	9.26	9.5	9.74

*In case special stroke please contact technical services.

GB5Z

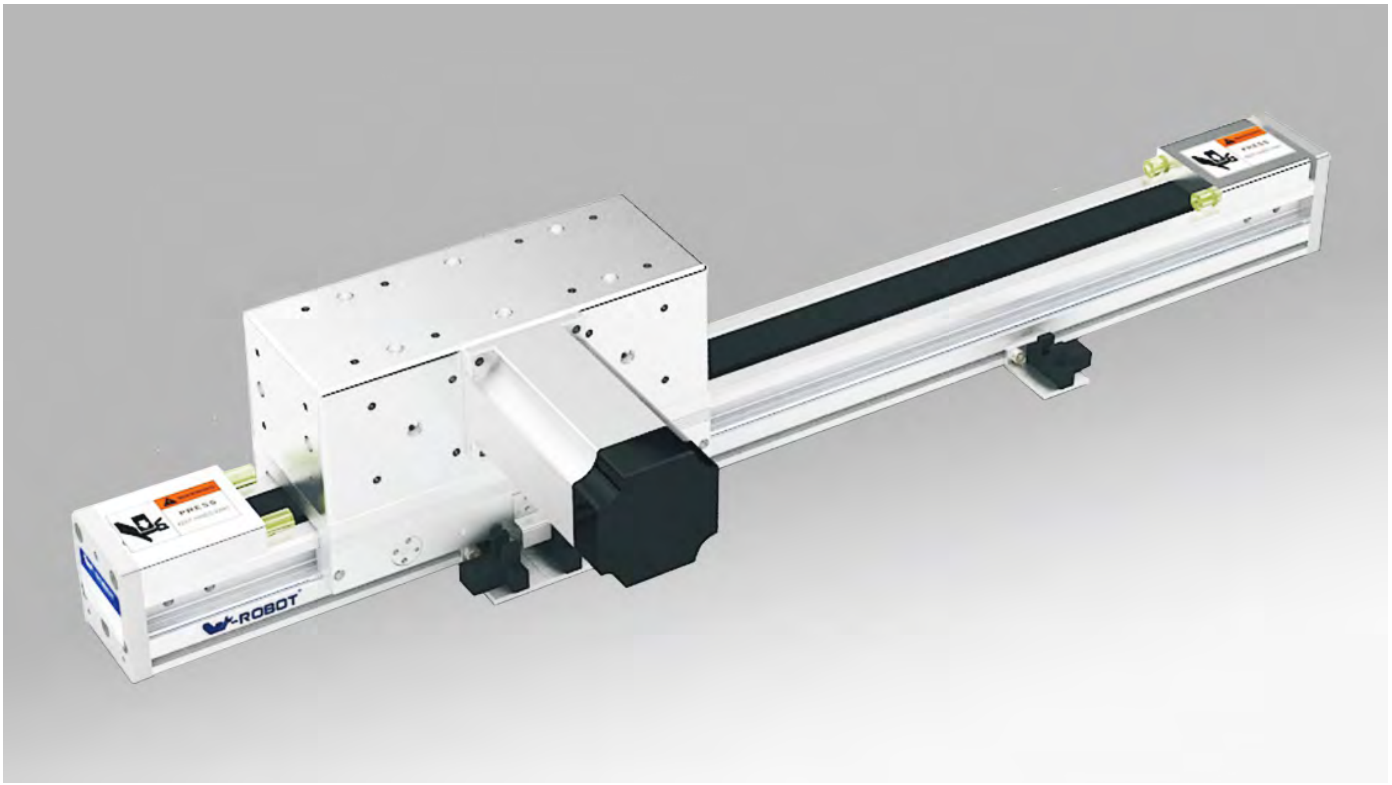

Motor direction

BR

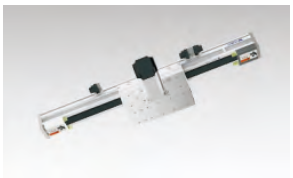

BL

Guide for Model Selection

GB5Z – L120 – S100 – BL – ZP40B – D3 – ____

Base Style	
Semiclosed with Frame Belt Type	
5	Body width55

Leather belt Type	
L	Clean belt
Lead	
120	120mm

Stroke(mm)
100-1500

Motor way	
BR	Right Side
BL	Left Side

Motor Type		Motor power	
P	Panasonic	40	400W
M	Mitsubishi	57	57 Stepper
Y	Yaskawa	Brakes	
T	Delta	No	No brake
* For Z: Motor is from clients		B	With brake

Original Sensor position		Limit Sensor Qty	
Ecxternal		Ecxternal	
C	Motor side	3	3pcs
D	Oppsite motor side	2	2pcs
E	No	No sensor	

Sensor type	
No	NPN
P	PNP

Non-standard, d.c.,	
No	Standard type
BL1	Detailed information please see page 032
B2	
D01	
U01	
UD01	
H01	
HU01	
HD01	
HUD01	
M01	
S01	

Specification

Motor power AC (W)		400W
Drive Type		Timing belt driving
Repeatability		±0.08
Lead(mm)		120
MaximumSpeed(mm/sec) 3000 Motor Speed(rpm/mim)		4000
Maximum Payload(kg)	Horizontal	
	Vertical	5 (The gearbox required)
RatedThrust(N)		65
Linear Guide (mm)		Ø6x4
Diameter of the synchronous wheel		38.2
Width of the synchronous belt		25
The allow tension for synchronous belt		539
Home Sensor		Outside EE-SX671(NPN) EE-SX671P(PNP)

Wiring drawing of inductor(original point and endpoint)

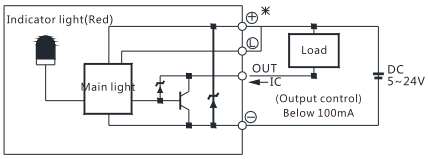

(Figure 1)

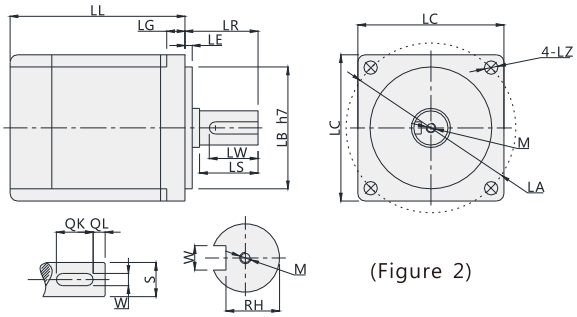

(Figure 2)

Servo Motor Matches List

Servo motor size																			
Power(W)	Brand	Type		LL	LL(Brakes)	LA	LE	LZ	LC	LG	LW	RH	W	LR	S	LB	M	QK	QL
200W	Panasonic	MHMJ022G1□	V:With brake U:No brake	99	135.5	70	3	4.5	60	6.5	20	8.5	4h9	30	11h6	50h7	M4x8L	-	-
	Delta	ECMA-C20602□S	S:With brake R:No brake	105.5	141.5	70	3	5.5	60	7.5	20	11	5	30	14h6	50h7	M4x15L	-	-
	Mitsubishi	HC-KFS23□K	B:With brake □:No brake	99.5	131.5	70	3	5.8	62	7	-	-	-	30	14h6	50h7	-	-	-
400W	Panasonic	MHMJ042G1□	V:With brake U:No brake	118.5	155.5	70	3	4.5	60	6.5	20	11	5h9	30	14h6	50h7	M5x10L	-	-
	Delta	ECMA-C20604□S	S:With brake R:No brake	130.7	166.6	70	3	5.5	60	7.5	20	11	5	30	14h6	50h7	M4x15L	-	-
		ECMA-C20804□S	S:With brake R:No brake	112.3	152.8	90	3	6.6	80	8	20	11	5	35	14h6	70h7	M4x15L	-	-
	Mitsubishi	HC-KFS43□K	B:With brake □:No brake	124.5	165.5	70	3	5.8	62	7	-	-	-	30	14h6	50h7	-	-	-

□ Stand for empty

Max. Payload Diameters Table

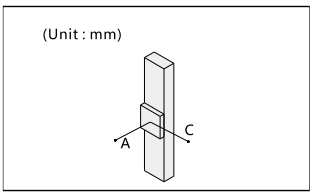

Vertical installation	A	C
5kg	245	200

Max. Static Torque Table

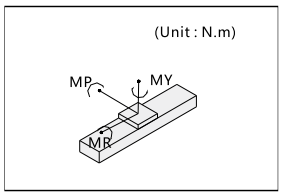

Maximum static torque	
MY	35
MP	70
MR	50

GB5Z

BR: Right Side

Unit (mm)

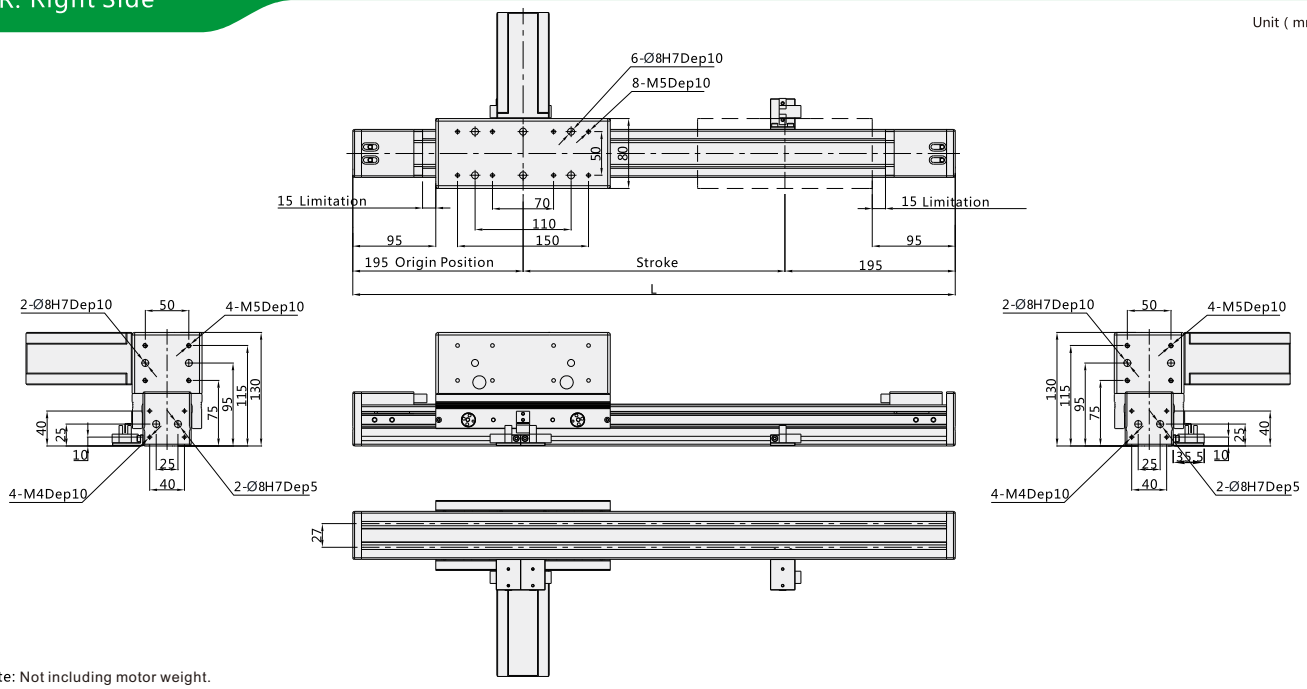

Note: Not including motor weight.

Working Stroke	100	150	200	250	300	350	400	450	500	550	600	650	700	750	800	850	900	950	1000	1050	1100	1150	1200	1250	1300	1350	1400	1450	1500
L	490	540	590	640	690	740	790	840	890	940	990	1040	1090	1140	1190	1240	1290	1340	1390	1440	1490	1540	1590	1640	1690	1740	1790	1840	1890
Weight KG	3.34	3.58	3.82	4.06	4.3	5.54	5.78	6.02	6.26	6.5	6.74	6.98	7.22	7.46	7.7	7.94	8.18	8.42	8.66	8.9	9.14	9.38	9.62	9.86	10.1	10.34	10.58	10.82	11.06

*In case special stroke please contact technical services.

BL: Left Side

Unit (mm)

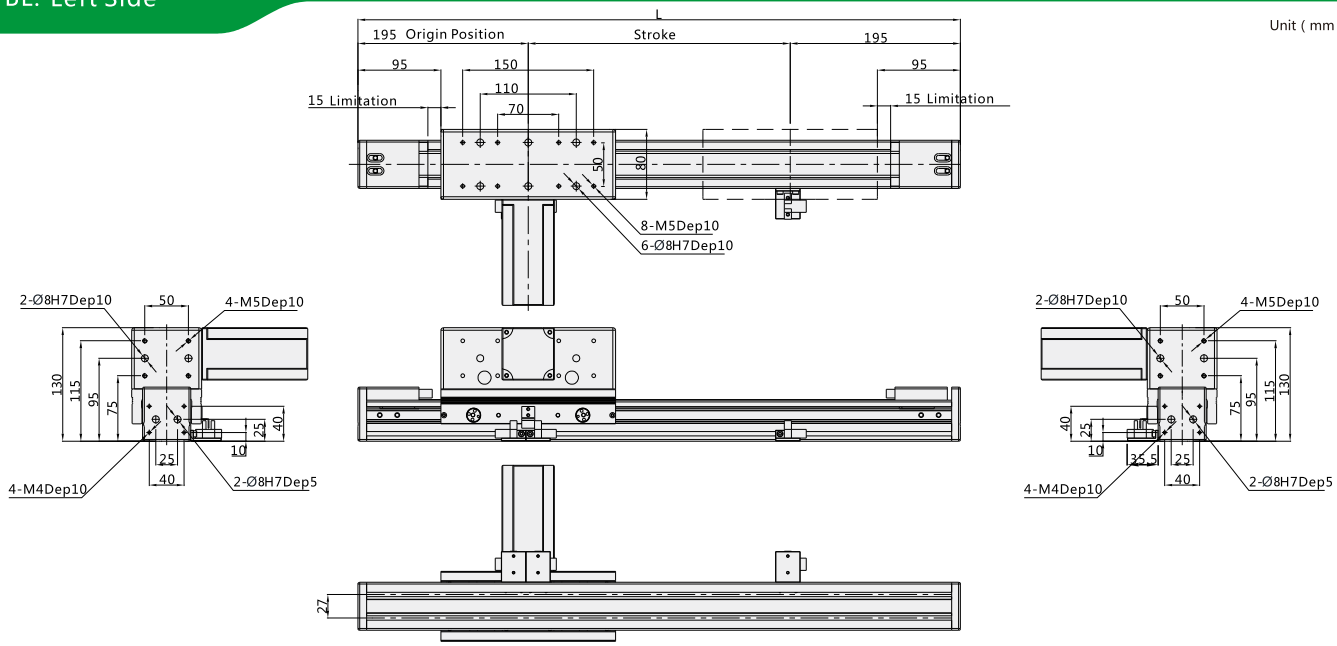

Note: Not including motor weight.

Working Stroke	100	150	200	250	300	350	400	450	500	550	600	650	700	750	800	850	900	950	1000	1050	1100	1150	1200	1250	1300	1350	1400	1450	1500
L	490	540	590	640	690	740	790	840	890	940	990	1040	1090	1140	1190	1240	1290	1340	1390	1440	1490	1540	1590	1640	1690	1740	1790	1840	1890
Weight KG	3.34	3.58	3.82	4.06	4.3	5.54	5.78	6.02	6.26	6.5	6.74	6.98	7.22	7.46	7.7	7.94	8.18	8.42	8.66	8.9	9.14	9.38	9.62	9.86	10.1	10.34	10.58	10.82	11.06

*In case special stroke please contact technical services.

GB8

W-ROBOT® Linear Drives

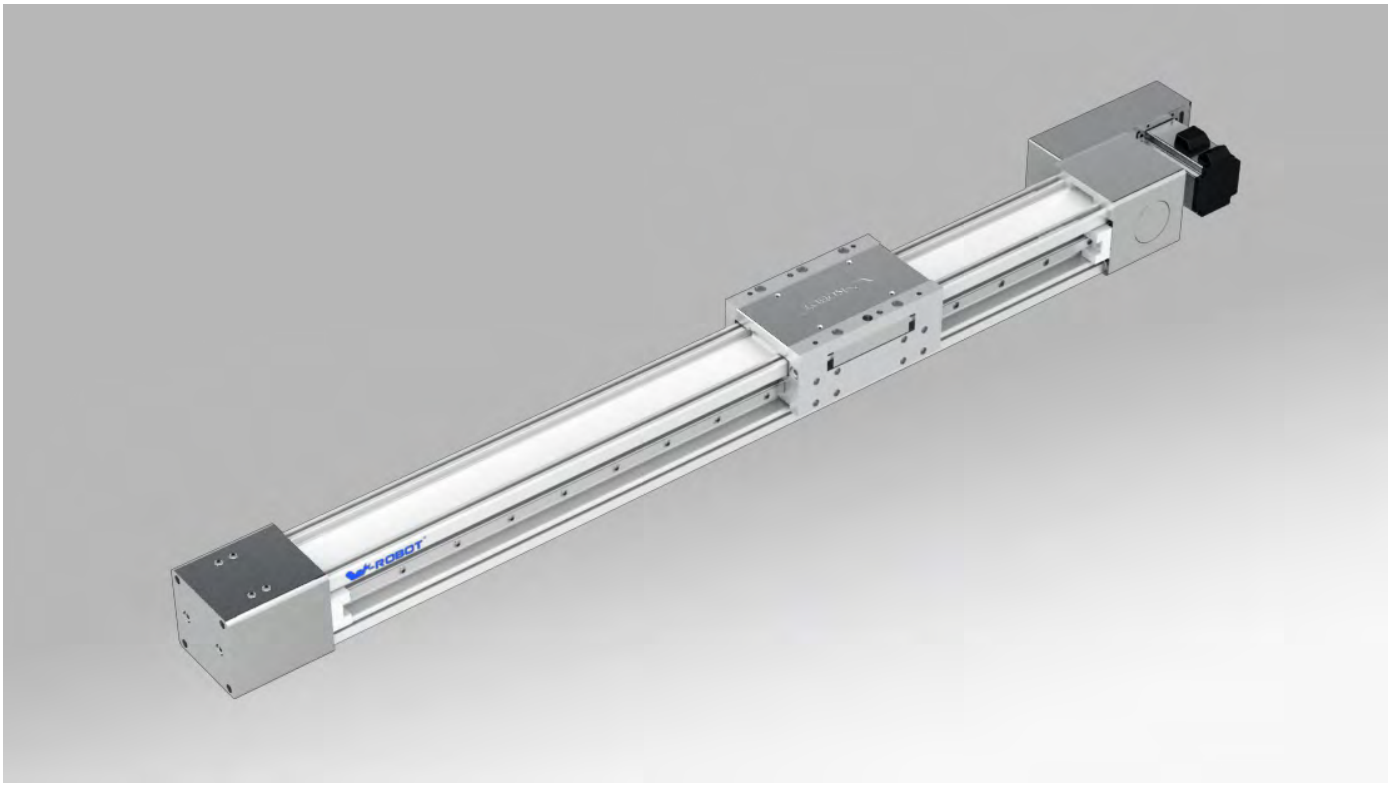

Motor direction

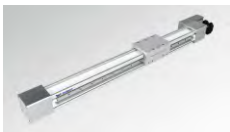

BL

BR

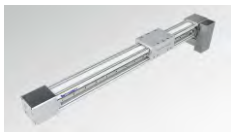

BRD

BLD

BLU

BRU

Guide for Model Selection

GB8 — L88 — S100 — BL — ZP20B — MS3 — ____

Base Style	
GB	Belt Type
80	Body width80

Leather belt Type	
L	Clean belt
X	Rubber belt
Lead	
88	88mm

Stroke(mm)
100-5500

Motor way	
BR	Right Side
BRU	Upper Right Side
BRD	Down Right Side
BL	Left Side
BLU	Upper Left Side
BLD	Down Left Side

Motor Type		Motor power	
P	Panasonic	20	200W
M	Mitsubishi	40	400W
Y	Yaskawa	Brakes	
T	Delta	No	No brake
* For Z: Motor is from clients		B	With brake

Sensor		Sensor switch	
C	The electro-optical sensor	3	1pcs
MS	Magnetic sensor	2	2pcs
E	No	1	1pcs

Sensor type	
No	NPN
P	PNP

Non-standard, d.c.,	
No	Standard type
BL1	Detailed information please see page 032
B2	
D01	
U01	
UD01	
H01	
HU01	
HD01	
HUD01	
M01	
S01	

Specification

Motor power AC (W)		400W/750W
Drive Type		Timing belt driving
Repeatability		±0.05
Lead(mm)		96
MaximumSpeed(mm/sec) 3000 Motor Speed(rpm/mim)		4400
Maximum Payload(kg)	Horizontal	*20/40
	Vertical	
RatedThrust(N)		*90/170
Linear Guide (mm)		15x 12.5-2
Diameter of the synchronous wheel		56.02
Reduction ratio		2
Width of the synchronous belt		30
The allow tension for synchronous belt		*1400
Sensor		The electro-optical sensor Outside EE-SX674(NPN) EE-SX674P(PNP)
		Magnetic sensor DS1-EN-020

*The reduction gears can be connected separately on the motor interfac

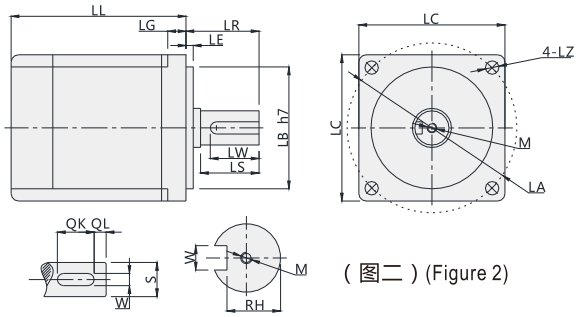

(图二) (Figure 2)

Servo Motor Matches List

(Table 1)

Servo motor size																			
Power(W)	Brand	Type		LL	LL(Brakes)	LA	LE	LZ	LC	LG	LW	RH	W	LR	S	LB	M	QK	QL
200W	Panasonic	MHMJ022G1□	V:With brake U:No brake	99	135.5	70	3	4.5	60	6.5	20	8.5	4h9	30	11h6	50h7	M4x8L	-	-
	Delta	ECMA-C20602□S	S:With brake R:No brake	105.5	141.5	70	3	5.5	60	7.5	20	11	5	30	14h6	50h7	M4x15L	-	-
	Mitsubishi	HC-KFS23□K	B:With brake □:No brake	99.5	131.5	70	3	5.8	62	7	-	-	-	30	14h6	50h7	-	-	-
400W	Panasonic	MHMJ042G1□	V:With brake U:No brake	118.5	155.5	70	3	4.5	60	6.5	20	11	5h9	30	14h6	50h7	M5x10L	-	-
	Delta	ECMA-C20604□S	S:With brake R:No brake	130.7	166.6	70	3	5.5	60	7.5	20	11	5	30	14h6	50h7	M4x15L	-	-
		ECMA-C20804□S	S:With brake R:No brake	112.3	152.8	90	3	6.6	80	8	20	11	5	35	14h6	70h7	M4x15L	-	-
	Mitsubishi	HC-KFS43□K	B:With brake □:No brake	124.5	165.5	70	3	5.8	62	7	-	-	-	30	14h6	50h7	-	-	-

□ Stand for empty

Max. Static Torque Table

(Unit : mm)

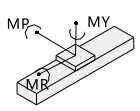

Maximum static torque	
MY	510
MP	510
MR	440

BR: Right Side

Unit (mm)

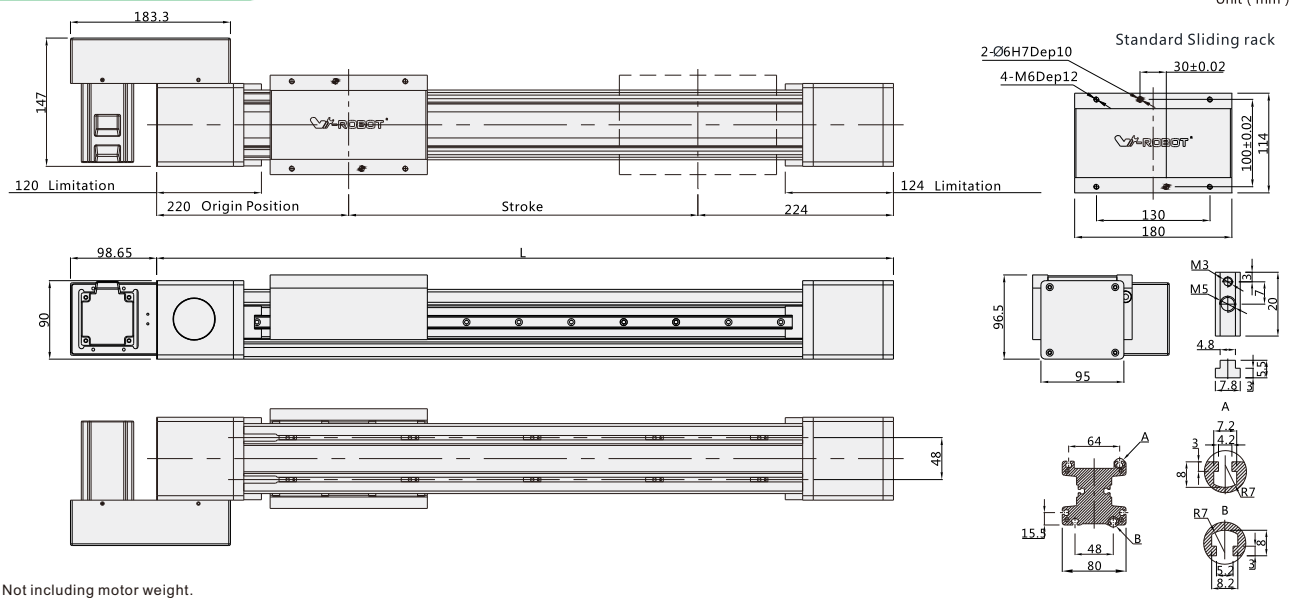

Note: Not including motor weight.

Working Stroke	100	150	200	250	300	350	400	450	500	550	600	650	700	750	800	850	900	950	1000	1050	1100	1150	1200	1250	1300	1350	1400	1450	1500
L	544	594	644	694	744	794	844	894	944	994	1044	1094	1144	1194	1244	1294	1344	1394	1444	1494	1544	1594	1644	1694	1744	1794	1844	1894	1944
Weight KG	10.0	10.4	10.8	11.2	11.6	12.0	12.4	12.8	13.2	13.6	14.0	14.4	14.8	15.2	15.6	16.0	16.4	16.8	17.2	17.6	18.0	18.4	18.8	19.2	19.6	20.0	20.4	20.8	21.2

Working Stroke	1550	1600	1650	1700	1750	1800	1850	1900	1950	2000	2050	2100	2150	2200	2250	2300	2350	2400	2450	2500	2550	2600	2650	2700	2750	2800	2850	2900	2950
L	1994	2044	2094	2144	2194	2244	2294	2344	2394	2444	2494	2544	2594	2644	2694	2744	2794	2844	2894	2944	2994	3044	3094	3144	3194	3244	3294	3344	3394
Weight KG	21.6	22.0	22.4	22.8	23.2	23.6	24.0	24.4	24.8	25.2	25.6	26.0	26.4	26.8	27.2	27.6	28.0	28.4	28.8	29.2	29.6	30.0	30.4	30.8	31.2	31.6	32.0	32.4	32.8

*In case special stroke please contact technical services.

BRU: Upper Right Side

Unit (mm)

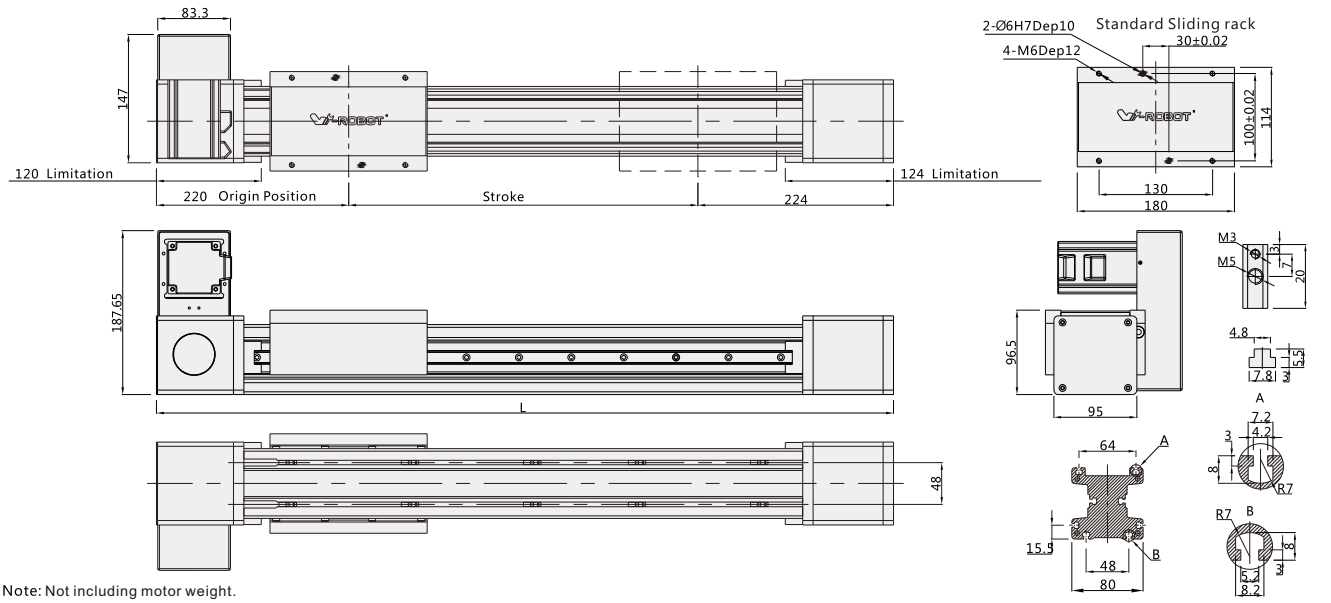

Note: Not including motor weight.

Working Stroke	100	150	200	250	300	350	400	450	500	550	600	650	700	750	800	850	900	950	1000	1050	1100	1150	1200	1250	1300	1350	1400	1450	1500
L	544	594	644	694	744	794	844	894	944	994	1044	1094	1144	1194	1244	1294	1344	1394	1444	1494	1544	1594	1644	1694	1744	1794	1844	1894	1944
Weight KG	10.0	10.4	10.8	11.2	11.6	12.0	12.4	12.8	13.2	13.6	14.0	14.4	14.8	15.2	15.6	16.0	16.4	16.8	17.2	17.6	18.0	18.4	18.8	19.2	19.6	20.0	20.4	20.8	21.2

Working Stroke	1550	1600	1650	1700	1750	1800	1850	1900	1950	2000	2050	2100	2150	2200	2250	2300	2350	2400	2450	2500	2550	2600	2650	2700	2750	2800	2850	2900	2950
L	1994	2044	2094	2144	2194	2244	2294	2344	2394	2444	2494	2544	2594	2644	2694	2744	2794	2844	2894	2944	2994	3044	3094	3144	3194	3244	3294	3344	3394
Weight KG	21.6	22.0	22.4	22.8	23.2	23.6	24.0	24.4	24.8	25.2	25.6	26.0	26.4	26.8	27.2	27.6	28.0	28.4	28.8	29.2	29.6	30.0	30.4	30.8	31.2	31.6	32.0	32.4	32.8

*In case special stroke please contact technical services.

BRD: Down Right Side

Unit (mm)

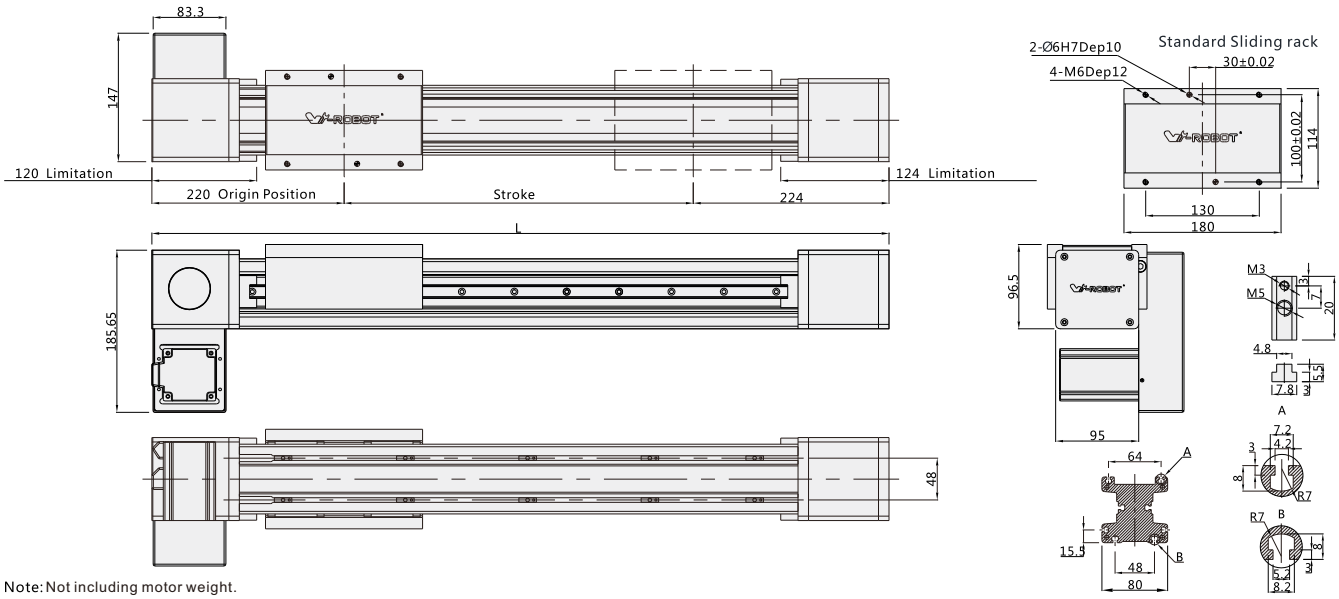

Note: Not including motor weight.

Working Stroke	100	150	200	250	300	350	400	450	500	550	600	650	700	750	800	850	900	950	1000	1050	1100	1150	1200	1250	1300	1350	1400	1450	1500
L	544	594	644	694	744	794	844	894	944	994	1044	1094	1144	1194	1244	1294	1344	1394	1444	1494	1544	1594	1644	1694	1744	1794	1844	1894	1944
Weight KG	10.0	10.4	10.8	11.2	11.6	12.0	12.4	12.8	13.2	13.6	14.0	14.4	14.8	15.2	15.6	16.0	16.4	16.8	17.2	17.6	18.0	18.4	18.8	19.2	19.6	20.0	20.4	20.8	21.2

Working Stroke	1550	1600	1650	1700	1750	1800	1850	1900	1950	2000	2050	2100	2150	2200	2250	2300	2350	2400	2450	2500	2550	2600	2650	2700	2750	2800	2850	2900	2950
L	1994	2044	2094	2144	2194	2244	2294	2344	2394	2444	2494	2544	2594	2644	2694	2744	2794	2844	2894	2944	2994	3044	3094	3144	3194	3244	3294	3344	3394
Weight KG	21.6	22.0	22.4	22.8	23.2	23.6	24.0	24.4	24.8	25.2	25.6	26.0	26.4	26.8	27.2	27.6	28.0	28.4	28.8	29.2	29.6	30.0	30.4	30.8	31.2	31.6	32.0	32.4	32.8

*In case special stroke please contact technical services.

BL: Left Side

Unit (mm)

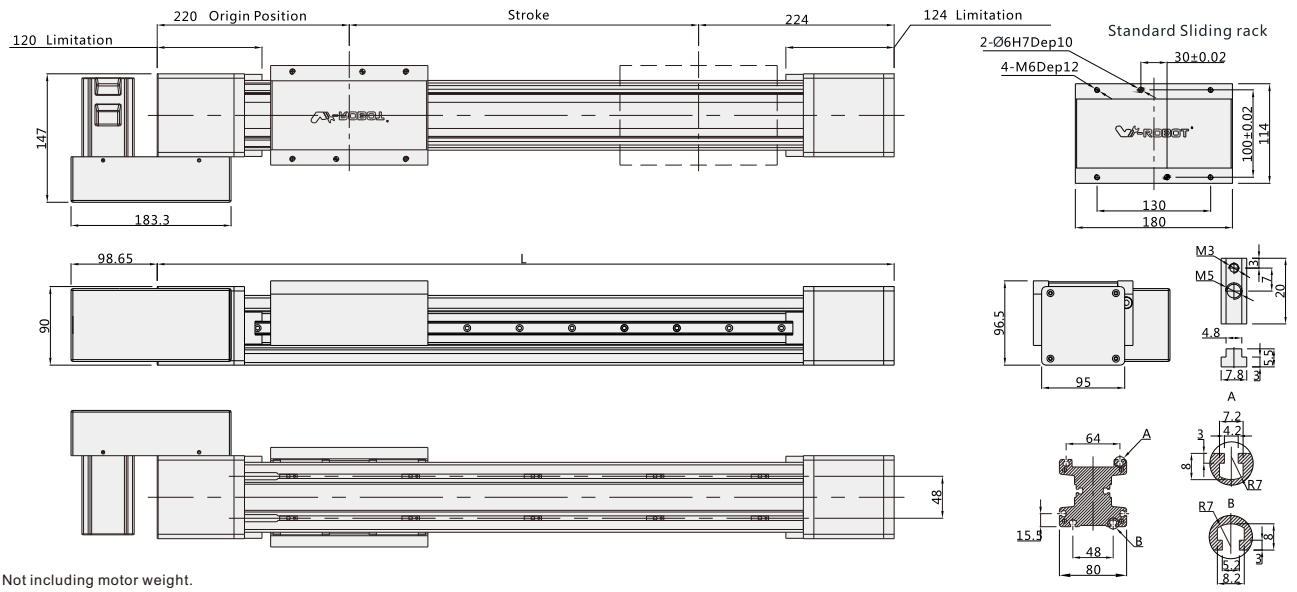

Note: Not including motor weight.

Working Stroke	100	150	200	250	300	350	400	450	500	550	600	650	700	750	800	850	900	950	1000	1050	1100	1150	1200	1250	1300	1350	1400	1450	1500
L	544	594	644	694	744	794	844	894	944	994	1044	1094	1144	1194	1244	1294	1344	1394	1444	1494	1544	1594	1644	1694	1744	1794	1844	1894	1944
Weight KG	10.0	10.4	10.8	11.2	11.6	12.0	12.4	12.8	13.2	13.6	14.0	14.4	14.8	15.2	15.6	16.0	16.4	16.8	17.2	17.6	18.0	18.4	18.8	19.2	19.6	20.0	20.4	20.8	21.2

Working Stroke	1550	1600	1650	1700	1750	1800	1850	1900	1950	2000	2050	2100	2150	2200	2250	2300	2350	2400	2450	2500	2550	2600	2650	2700	2750	2800	2850	2900	2950
L	1994	2044	2094	2144	2194	2244	2294	2344	2394	2444	2494	2544	2594	2644	2694	2744	2794	2844	2894	2944	2994	3044	3094	3144	3194	3244	3294	3344	3394
Weight KG	21.6	22.0	22.4	22.8	23.2	23.6	24.0	24.4	24.8	25.2	25.6	26.0	26.4	26.8	27.2	27.6	28.0	28.4	28.8	29.2	29.6	30.0	30.4	30.8	31.2	31.6	32.0	32.4	32.8

*In case special stroke please contact technical services.

BLU: Upper Left Side

Unit (mm)

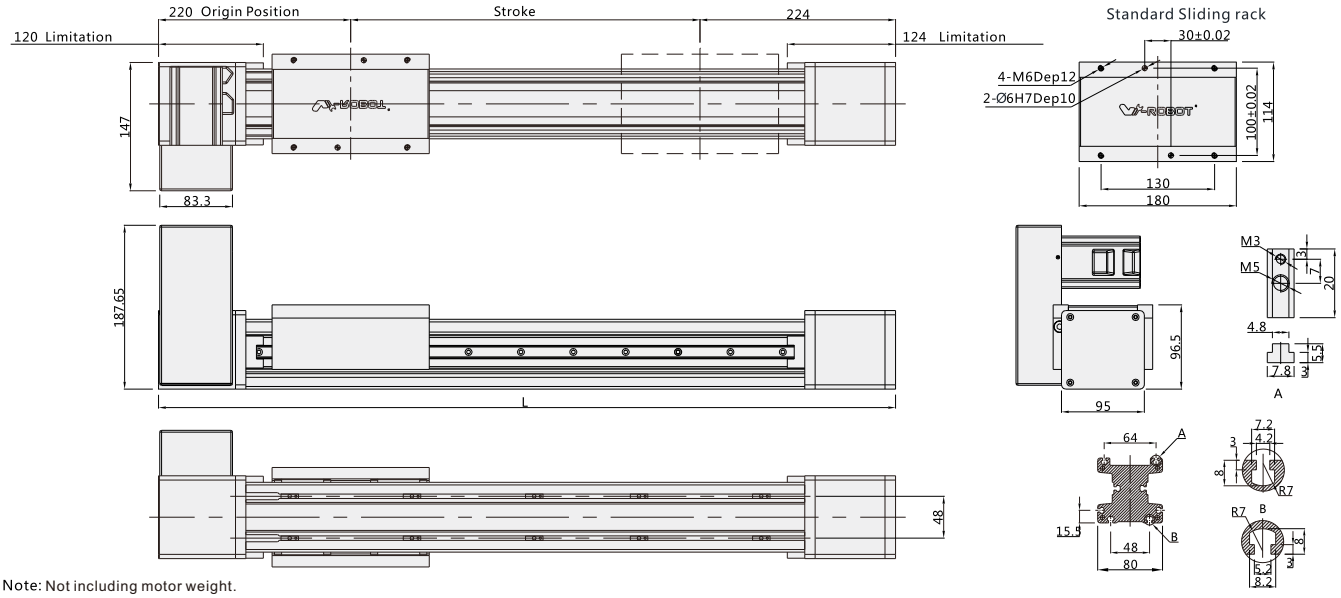

Note: Not including motor weight.

Working Stroke	100	150	200	250	300	350	400	450	500	550	600	650	700	750	800	850	900	950	1000	1050	1100	1150	1200	1250	1300	1350	1400	1450	1500
L	544	594	644	694	744	794	844	894	944	994	1044	1094	1144	1194	1244	1294	1344	1394	1444	1494	1544	1594	1644	1694	1744	1794	1844	1894	1944
Weight KG	10.0	10.4	10.8	11.2	11.6	12.0	12.4	12.8	13.2	13.6	14.0	14.4	14.8	15.2	15.6	16.0	16.4	16.8	17.2	17.6	18.0	18.4	18.8	19.2	19.6	20.0	20.4	20.8	21.2

Working Stroke	1550	1600	1650	1700	1750	1800	1850	1900	1950	2000	2050	2100	2150	2200	2250	2300	2350	2400	2450	2500	2550	2600	2650	2700	2750	2800	2850	2900	2950
L	1994	2044	2094	2144	2194	2244	2294	2344	2394	2444	2494	2544	2594	2644	2694	2744	2794	2844	2894	2944	2994	3044	3094	3144	3194	3244	3294	3344	3394
Weight KG	21.6	22.0	22.4	22.8	23.2	23.6	24.0	24.4	24.8	25.2	25.6	26.0	26.4	26.8	27.2	27.6	28.0	28.4	28.8	29.2	29.6	30.0	30.4	30.8	31.2	31.6	32.0	32.4	32.8

*In case special stroke please contact technical services.

BLD: Down Left Side

Unit (mm)

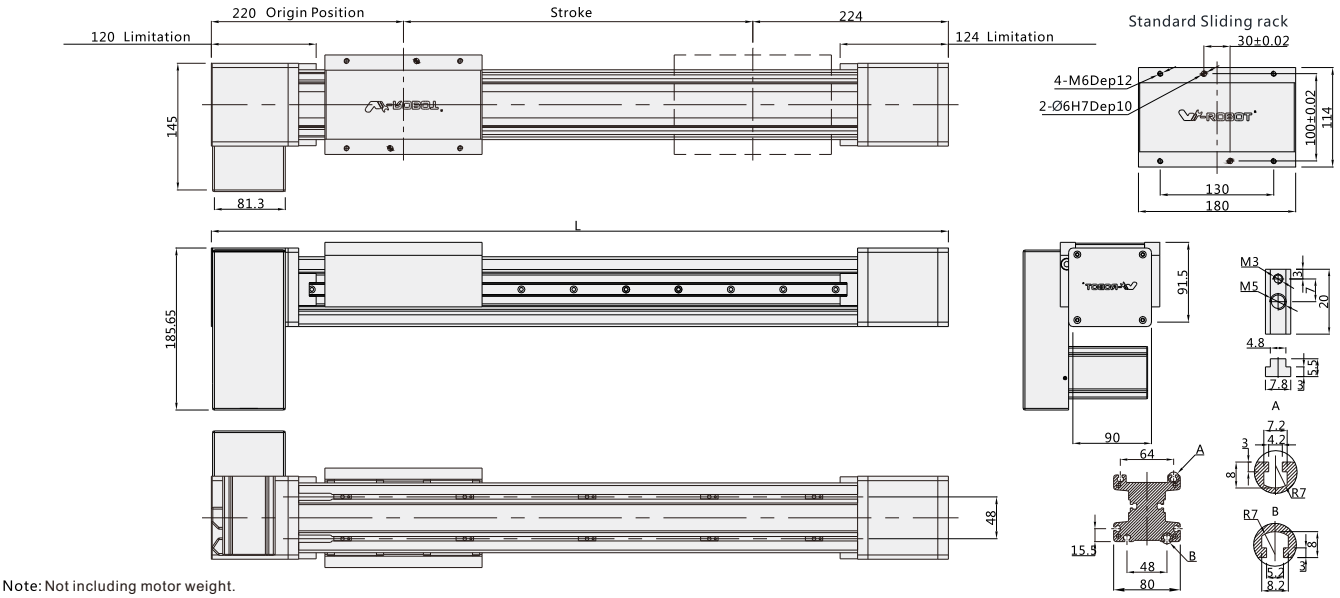

Note: Not including motor weight.

Working Stroke	100	150	200	250	300	350	400	450	500	550	600	650	700	750	800	850	900	950	1000	1050	1100	1150	1200	1250	1300	1350	1400	1450	1500
L	544	594	644	694	744	794	844	894	944	994	1044	1094	1144	1194	1244	1294	1344	1394	1444	1494	1544	1594	1644	1694	1744	1794	1844	1894	1944
Weight KG	10.0	10.4	10.8	11.2	11.6	12.0	12.4	12.8	13.2	13.6	14.0	14.4	14.8	15.2	15.6	16.0	16.4	16.8	17.2	17.6	18.0	18.4	18.8	19.2	19.6	20.0	20.4	20.8	21.2

Working Stroke	1550	1600	1650	1700	1750	1800	1850	1900	1950	2000	2050	2100	2150	2200	2250	2300	2350	2400	2450	2500	2550	2600	2650	2700	2750	2800	2850	2900	2950
L	1994	2044	2094	2144	2194	2244	2294	2344	2394	2444	2494	2544	2594	2644	2694	2744	2794	2844	2894	2944	2994	3044	3094	3144	3194	3244	3294	3344	3394
Weight KG	21.6	22.0	22.4	22.8	23.2	23.6	24.0	24.4	24.8	25.2	25.6	26.0	26.4	26.8	27.2	27.6	28.0	28.4	28.8	29.2	29.6	30.0	30.4	30.8	31.2	31.6	32.0	32.4	32.8

*In case special stroke please contact technical services.

GB8Z

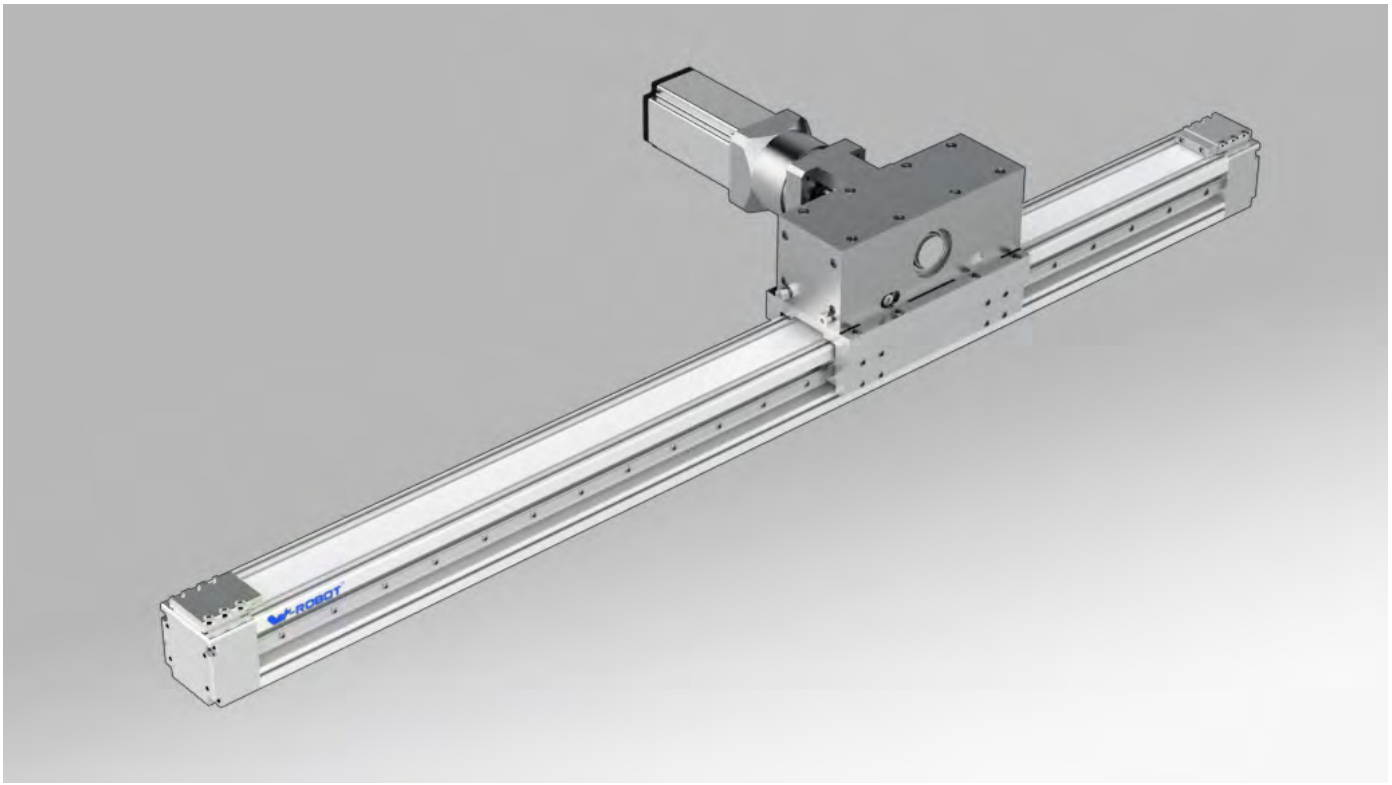

Motor direction

BLR

Guide for Model Selection

GB8Z – L200 – S100 – BLR – ZP75B – MS3 – ____

Base Style	
GB	Belt Type
80	Body width80
Z	Vertical

Leather belt Type	
L	Clean belt
X	Rubber belt
Lead	
200	200mm

Stroke(mm)
100-2000

Motor way	
BLR	Right/Left Side

Motor Type	
P	Panasonic
M	Mitsubishi
Y	Yaskawa
T	Delta
W	W-Robot

* For Z: Motor is from clients

Motor power	
75	750W
Brakes	
No	No brake
B	With brake

Sensor	
C	The electro-optical sensor
MS	Magnetic sensor
E	No

Sensor switch	
3	1pcs
2	2pcs
1	1pcs

Sensor type	
No	NPN
P	PNP

Non-standard, d.c.,	
No	Standard type
BL1	Detailed information please see page 032
B2	
D01	
U01	
UD01	
H01	
HU01	
HD01	
HUD01	
M01	
S01	

GB8Z

W-ROBOT® Linear Drives

Specification

Motor power AC (W)		750W
Drive Type		Timing belt driving
Repeatability		±0.05
Lead(mm)		*1 200 (The gearbox required)
MaximumSpeed(mm/sec) 3000 Motor Speed(rpm/mim)		*2 1000
Maximum Payload(kg)	Horizontal	
	Vertical	15
RatedThrust(N)		*3 700
Linear Guide (mm)		15x 12.5-2
Diameter of the synchronous wheel		63.66
Width of the synchronous belt		40
The allow tension for synchronous belt		1882
Sensor		The electro-optical sensor Outside EE-SX674(NPN) EE-SX674P(PNP)
		Magnetic sensor DS1-EN-020

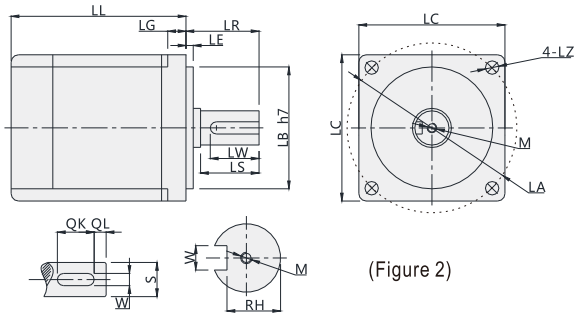

(Figure 2)

*1.The standard lead for 200mm,the reduction gears required for operation (E.g. 1/10 reduction gear , 200/10 =20 ,the lead can be 20mm)

*2.The linear actuator reachs the max velocity 1000mm/s with 1/10 reduction gear (The rotation rate for motor is 3000r/min), changes reduction ratio of the reduction gear , follows the velocity change for actuators.

*3.The horizontal rated trust for 1/10 reduction gears are 700N (The actuators operate vertically need to remove the body load when up runing)

Servo Motor Matches List

(Table 1)

Servo motor size																			
Power(W)	Brand	Type		LL	LL(Brakes)	LA	LE	LZ	LC	LG	LW	RH	W	LR	S	LB	M	QK	QL
750W	Panasonic	MSMJ082G1□	V:With brake U:No brake	122	149	90	3	6	80	8	25	15.5	6h9	35	19h6	70h7	M5x10L	-	-
	Delta	ECMA-C20807□	S:With brake R:No brake	138.3	178	90	3	6.6	80	8	25	15.5	6	35	19h6	70h7	M6x20L	-	-
		ECMA-C20907□	S:With brake R:No brake	130.2	161.3	100	3	6.6	86	8	20	13	5	35	16h6	80h7	M5x15L	-	-
	Mitsubishi	HC-KFS73□	B:With brake □:No brake	142	177.5	90	3	6.6	82	8	-	-	-	40	19h6	70h7	-	-	-

□ Stand for empty

Max. Static Torque Table

(Unit : mm)

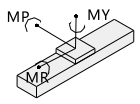

Maximum static torque	
MY	510
MP	510
MR	440

GB8Z

BLR: Right/Left Side

Unit (mm)

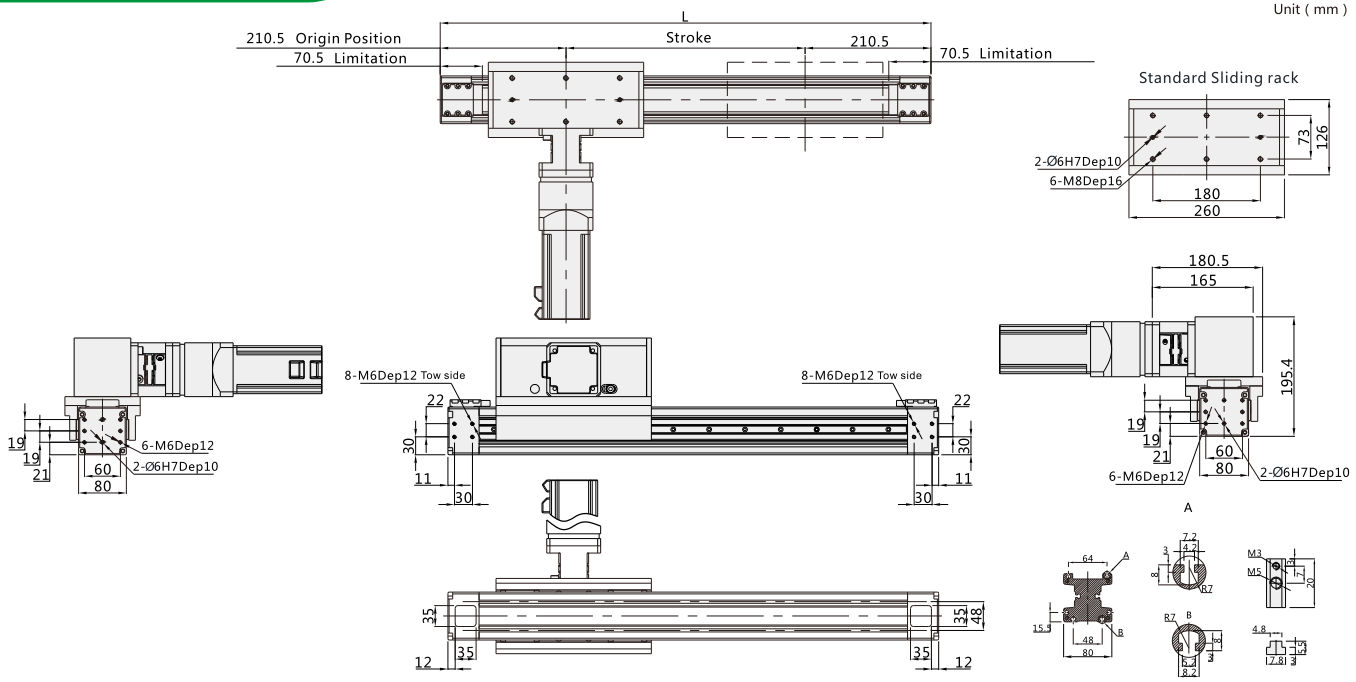

Note: Not including motor weight.

Working Stroke	100	150	200	250	300	350	400	450	500	550	600	650	700	750	800	850	900	950	1000	1050	1100	1150	1200	1250	1300	1350	1400	1450	1500	1550	1600	1650	1700	1750	1800	1850	1900	1950	2000
L	521	571	621	671	721	771	821	871	921	971	1021	1071	1121	1171	1221	1271	1321	1371	1421	1471	1521	1571	1621	1671	1721	1771	1821	1871	1921	1971	2021	2071	2121	2171	2221	2271	2321	2371	2421
Weight KG	14.2	14.6	15.0	15.4	15.8	16.2	16.6	17.0	17.4	17.8	18.2	18.6	19.0	19.4	19.8	20.2	20.6	21.0	21.4	21.8	22.2	22.6	23.0	23.4	23.8	24.2	24.6	25.0	25.4	25.8	26.2	26.6	27.0	27.4	27.8	28.2	28.6	29.0	29.4

*In case special stroke please contact technical services.

Dual Motors Series

Timing belt drive
Normal environment

VBF14S2

Maximum Stroke 3000mm
Maximum Payload ∗20KGx2…… 194
Body Width 140mm

Timing belt drive
Dust-free environment

VBC14S2

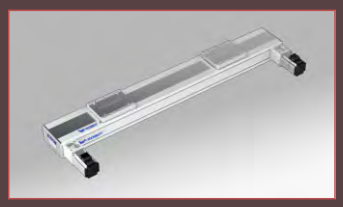

Maximum Stroke 3000mm
Maximum Payload ∗20KGx2……202
Body Width 140mm

…….

VBF14S2

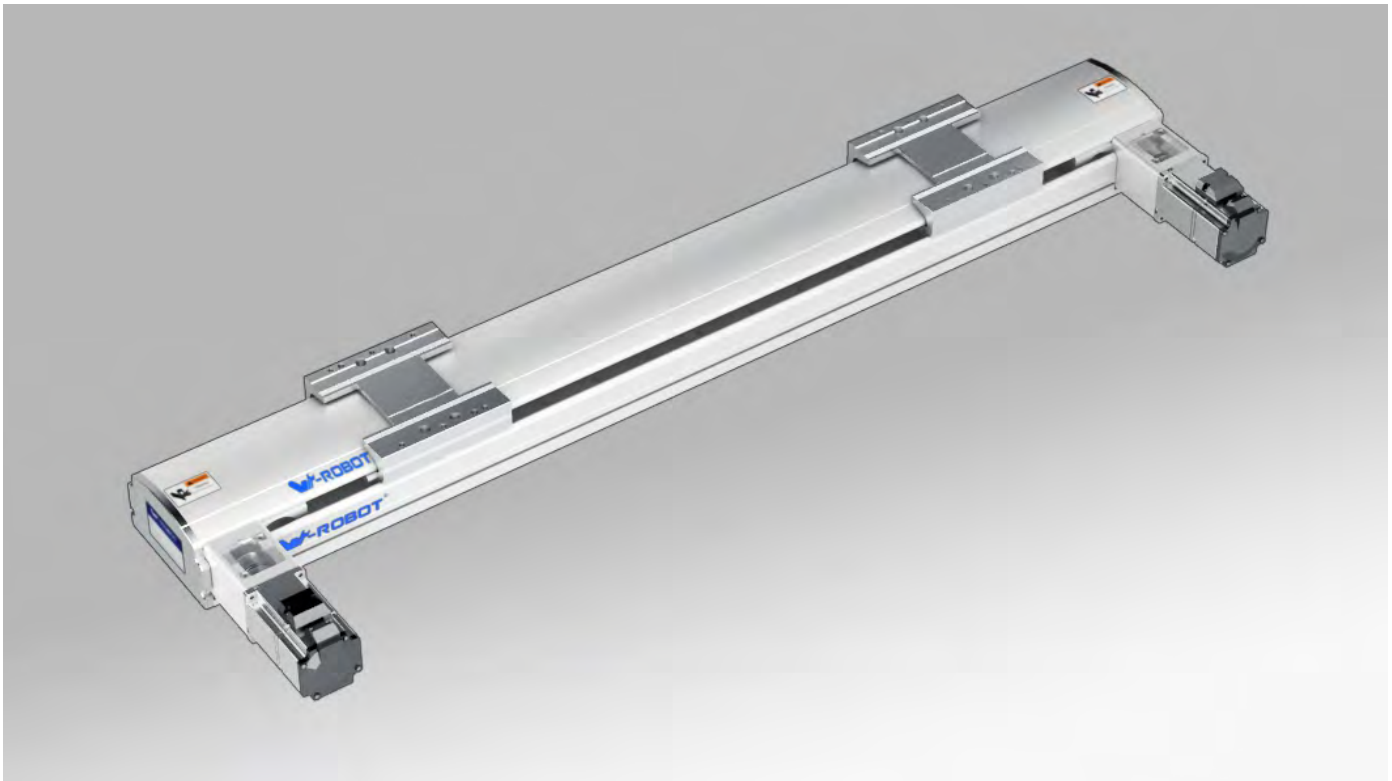

Motor direction

BD

BU

BLR

L100_BLR

Guide for Model Selection

VBF14S2 — L50 — S100 — BLR — ZP40B — C6 — ____

Base Style	
V	V series
BF	Semiclosed with Frame Belt Type
14	Body width140

Motor Qty	
S2	Dual motor runing a repeat stroke

Leather belt Type	
L	Clean belt
X	Rubber belt

Lead		
50	50mm	Motor with the synchronous wheel connecting
100	100mm	Motor with coupling connecting

Stroke(mm)
100-3000

Motor way	
BLR	Right/Left Side
BU	Upper Side
BD	Down Side

Motor Type	
P	Panasonic
M	Mitsubishi
Y	Yaskawa
T	Delta

* For Z: Motor is from clients

Motor power	
20	200W
40	400W
75	750W

Brakes	
No	No brake
B	With brake

Original Sensor position	
External	
C	Motor side
D	Oppsite motor side
E	No

Sensor switch	
External	
2	2pcs
6	6pcs
No sensor	

Sensor type	
No	NPN
P	PNP

Non-standard, d.c.,	
No	Standard type
BL1	Detailed information please see page 032
B2	
D01	
U01	
UD01	
H01	
HU01	
HD01	
HUD01	
M01	
S01	

VBF14S2

W-ROBOT® Linear Drives

Specification

Motor power AC (W)		400W	
Drive Type		Timing belt driving	
Repeatability		±0.04	
Lead(mm)		50	100
MaximumSpeed(mm/sec) 3000 Motor Speed(rpm/mim)		2500	5000
Maximum Payload(kg)	Horizontal	*20	*10
	Vertical		
RatedThrust(N)		150	75
Linear Guide (mm)		20x15.5-2	
Home Sensor		Outside EE-SX672(NPN) EE-SX672P(PNP)	
		Outside Guide EE-SX674(NPN) EE-SX674P(PNP)	

Wiring drawing of inductor(original point and endpoint)

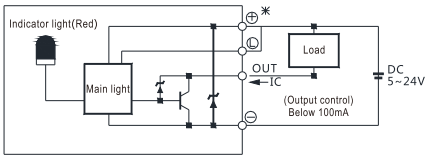

(Figure 1)

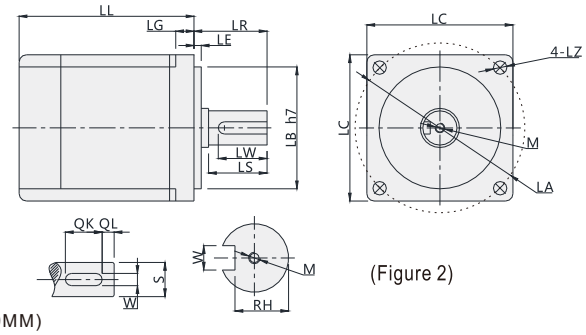

(Figure 2)

*Horiz payload 20KG just one slding rack required(Lead 50MM)/10KG(Lead100MM)
*Within horiz ACC 5m/sec^2 (Properly increased ACC while payload is reducing)

Servo Motor Matches List

(Table 1)

Servo motor size																			
Power(W)	Brand	Type		LL	LL(Brakes)	LA	LE	LZ	LC	LG	LW	RH	W	LR	S	LB	M	QK	QL
200W	Panasonic	MHMJ022G1□	V:With brake U:No brake	99	135.5	70	3	4.5	60	6.5	20	8.5	4h9	30	11h6	50h7	M4x8L	-	-
	Delta	ECMA-C20602□S	S:With brake R:No brake	105.5	141.5	70	3	5.5	60	7.5	20	11	5	30	14h6	50h7	M4x15L	-	-
	Mitsubishi	HC-KFS23□K	B:With brake □:No brake	99.5	131.5	70	3	5.8	62	7	-	-	-	30	14h6	50h7	-	-	-
400W	Panasonic	MHMJ042G1□	V:With brake U:No brake	118.5	155.5	70	3	4.5	60	6.5	20	11	5h9	30	14h6	50h7	M5x10L	-	-
	Delta	ECMA-C20604□S	S:With brake R:No brake	130.7	166.6	70	3	5.5	60	7.5	20	11	5	30	14h6	50h7	M4x15L	-	-
		ECMA-C20804□S	S:With brake R:No brake	112.3	152.8	90	3	6.6	80	8	20	11	5	35	14h6	70h7	M4x15L	-	-
	Mitsubishi	HC-KFS43□K	B:With brake □:No brake	124.5	165.5	70	3	5.8	62	7	-	-	-	30	14h6	50h7	-	-	-
750W	Panasonic	MHMJ082G1□	V:With brake U:No brake	127.2	164.2	90	3	6	80	8	25	15.5	6h9	35	19h6	70h7	M5x10L	-	-
	Delta	ECMA-C20807□S	S:With brake R:No brake	138.3	178	90	3	6.6	80	8	25	15.5	6	35	19h6	70h7	M6x20L	-	-
		ECMA-C20907□S	S:With brake R:No brake	130.2	161.3	100	3	6.6	86	8	20	13	5	35	16h6	80h7	M5x15L	-	-
	Mitsubishi	HC-KFS73□K	B:With brake □:No brake	142	177.5	90	3	6.6	82	8	-	-	-	40	19h6	70h7	-	-	-

□ Stand for empty

Max. Payload Diameters Table

(Unit : mm)

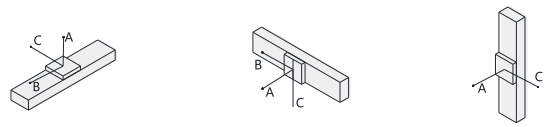

Horizontal installation	A	B	C
10kg	2800	1800	1250
20kg	2200	950	750
30kg	1800	650	550

Wall installation	A	B	C
10kg	1170	1300	2200
20kg	700	630	1600
30kg	450	380	1250

Max. Static Torque Table

(Unit : N.m)

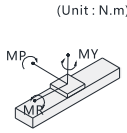

Maximum static torque	
MY	392
MP	394
MR	345

VBF14S2

BLR: Right Side —— Motor with coupling connecting

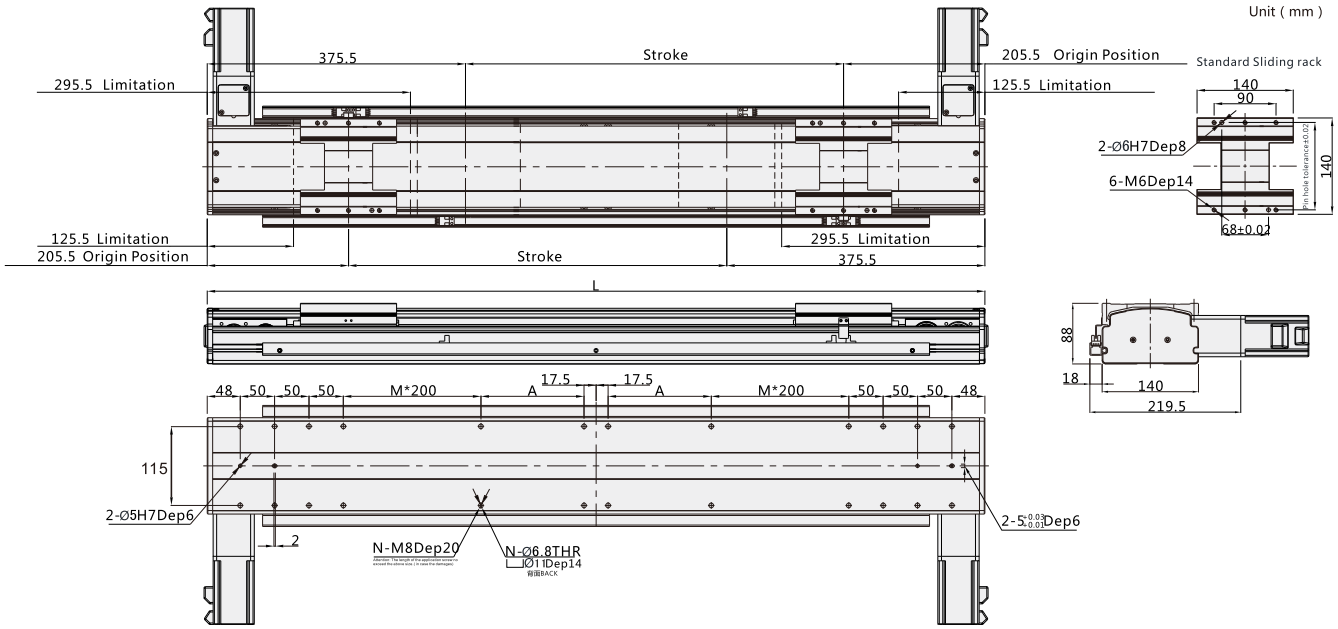

Note: Not including motor weight.

Working Stroke	100	150	200	250	300	350	400	450	500	550	600	650	700	750	800	850	900	950	1000	1050	1100	1150	1200	1250	1300	1350	1400	1450	1500
L	681	731	781	831	881	931	981	1031	1081	1131	1181	1231	1281	1331	1381	1431	1481	1531	1581	1631	1681	1731	1781	1831	1881	1931	1981	2031	2081
M	0	0	0	0	1	1	1	1	1	1	1	1	2	2	2	2	2	2	2	2	3	3	3	3	3	3	3	3	4
N	20	20	20	20	24	24	24	24	24	24	24	24	28	28	28	28	28	28	28	28	32	32	32	32	32	32	32	32	36
A	125	150	175	200	25	50	75	100	125	150	175	200	25	50	75	100	125	150	175	200	25	50	75	100	125	150	175	200	25
Weight KG	28.1	29.1	30.1	31.1	32.1	33.1	34.1	35.1	36.1	37.1	38.1	39.1	40.1	41.1	42.1	43.1	44.1	45.1	46.1	47.1	48.1	49.1	50.1	51.1	52.1	53.1	54.1	55.1	56.1

*In case special stroke please contact technical services.

BLR: Right Side

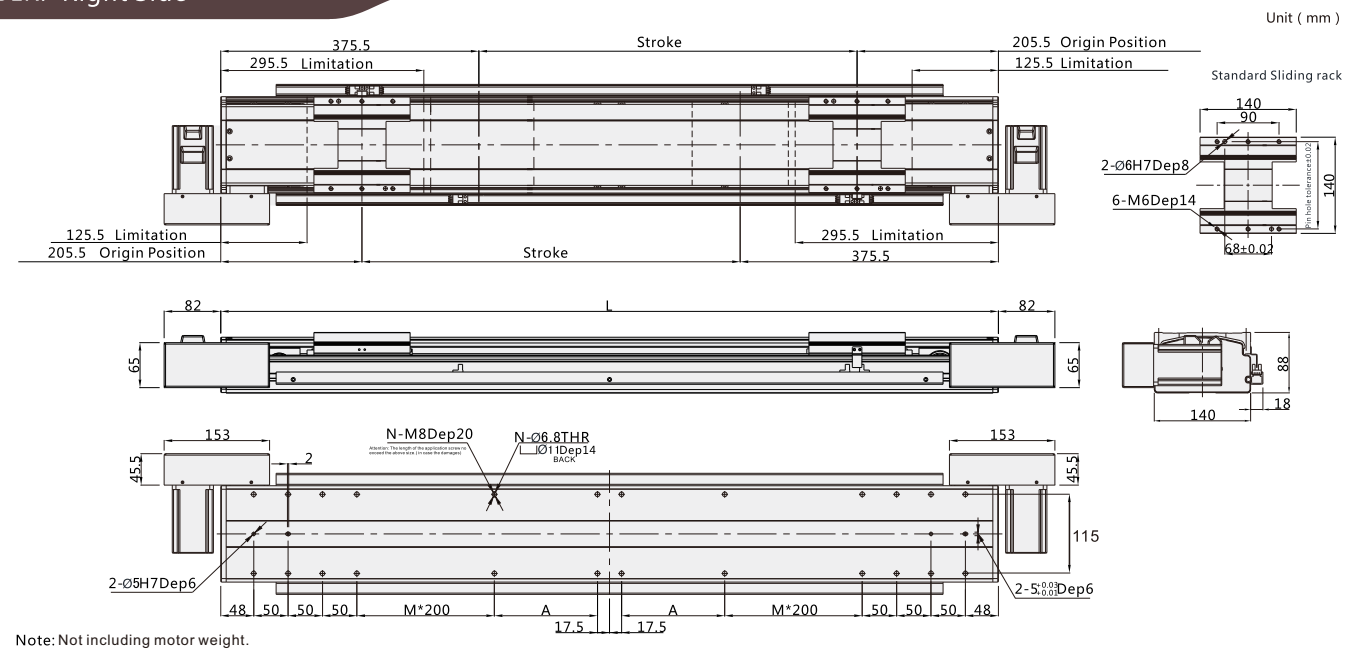

Note: Not including motor weight.

Working Stroke	100	150	200	250	300	350	400	450	500	550	600	650	700	750	800	850	900	950	1000	1050	1100	1150	1200	1250	1300	1350	1400	1450	1500
L	681	731	781	831	881	931	981	1031	1081	1131	1181	1231	1281	1331	1381	1431	1481	1531	1581	1631	1681	1731	1781	1831	1881	1931	1981	2031	2081
M	0	0	0	0	1	1	1	1	1	1	1	1	2	2	2	2	2	2	2	2	3	3	3	3	3	3	3	3	4
N	20	20	20	20	24	24	24	24	24	24	24	24	28	28	28	28	28	28	28	28	32	32	32	32	32	32	32	32	36
A	125	150	175	200	25	50	75	100	125	150	175	200	25	50	75	100	125	150	175	200	25	50	75	100	125	150	175	200	25
Weight KG	29.4	30.4	31.4	32.4	33.4	34.4	35.4	36.4	37.4	38.4	39.4	40.4	41.4	42.4	43.4	44.4	45.4	46.4	47.4	48.4	49.4	50.4	51.4	52.4	53.4	54.4	55.4	56.4	57.4

*In case special stroke please contact technical services.

VBF14S2

V-ROBOT® Linear Drives

BU: Upper Side

Unit (mm)

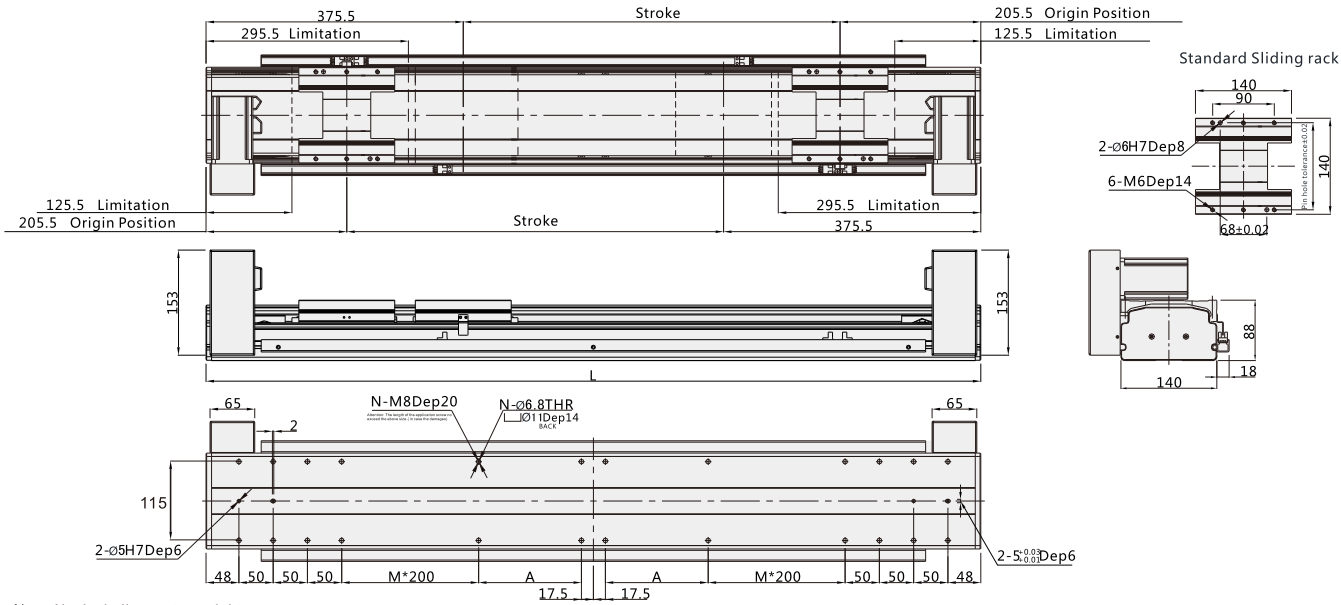

Note: Not including motor weight.

Working Stroke	100	150	200	250	300	350	400	450	500	550	600	650	700	750	800	850	900	950	1000	1050	1100	1150	1200	1250	1300	1350	1400	1450	1500
L	681	731	781	831	881	931	981	1031	1081	1131	1181	1231	1281	1331	1381	1431	1481	1531	1581	1631	1681	1731	1781	1831	1881	1931	1981	2031	2081
M	0	0	0	0	1	1	1	1	1	1	1	1	2	2	2	2	2	2	2	2	3	3	3	3	3	3	3	3	4
N	20	20	20	20	24	24	24	24	24	24	24	24	28	28	28	28	28	28	28	28	32	32	32	32	32	32	32	32	36
A	125	150	175	200	25	50	75	100	125	150	175	200	25	50	75	100	125	150	175	200	25	50	75	100	125	150	175	200	25
Weight KG	29.4	30.4	31.4	32.4	33.4	34.4	35.4	36.4	37.4	38.4	39.4	40.4	41.4	42.4	43.4	44.4	45.4	46.4	47.4	48.4	49.4	50.4	51.4	52.4	53.4	54.4	55.4	56.4	57.4

*In case special stroke please contact technical services.

BD: Down Side

Unit (mm)

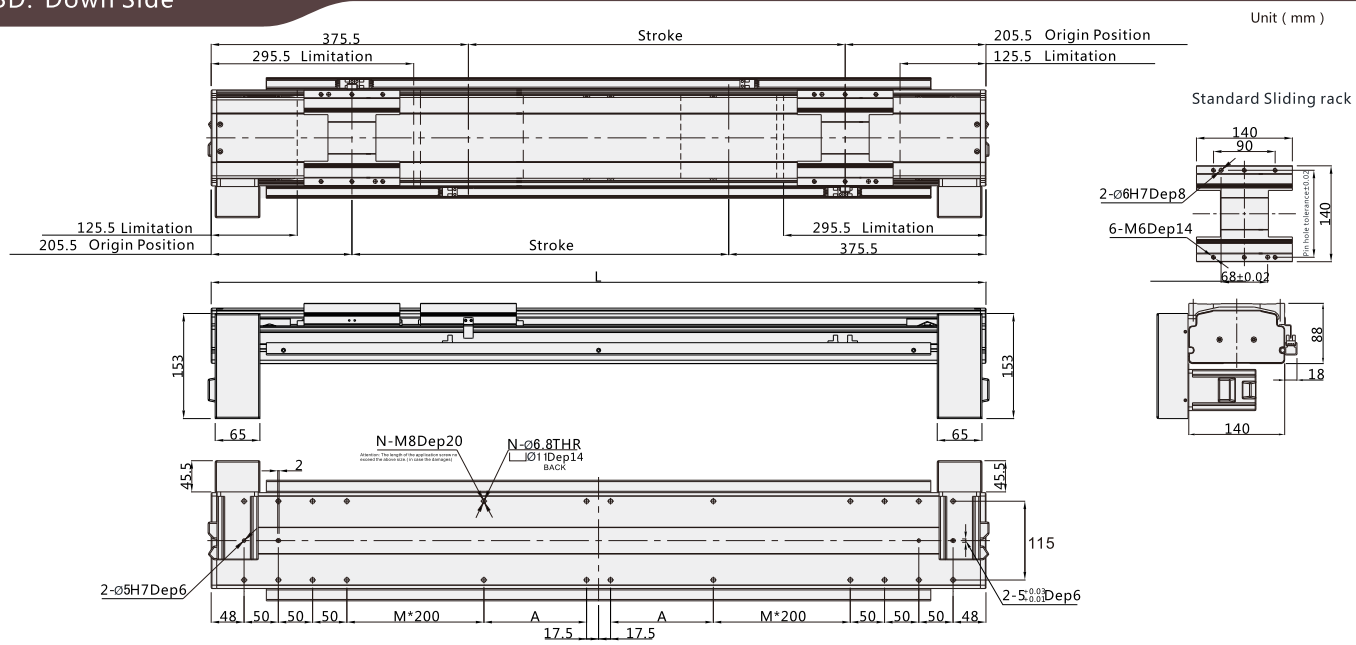

Note: Not including motor weight.

Working Stroke	100	150	200	250	300	350	400	450	500	550	600	650	700	750	800	850	900	950	1000	1050	1100	1150	1200	1250	1300	1350	1400	1450	1500
L	681	731	781	831	881	931	981	1031	1081	1131	1181	1231	1281	1331	1381	1431	1481	1531	1581	1631	1681	1731	1781	1831	1881	1931	1981	2031	2081
M	0	0	0	0	1	1	1	1	1	1	1	1	2	2	2	2	2	2	2	2	3	3	3	3	3	3	3	3	4
N	20	20	20	20	24	24	24	24	24	24	24	24	28	28	28	28	28	28	28	28	32	32	32	32	32	32	32	32	36
A	125	150	175	200	25	50	75	100	125	150	175	200	25	50	75	100	125	150	175	200	25	50	75	100	125	150	175	200	25
Weight KG	29.4	30.4	31.4	32.4	33.4	34.4	35.4	36.4	37.4	38.4	39.4	40.4	41.4	42.4	43.4	44.4	45.4	46.4	47.4	48.4	49.4	50.4	51.4	52.4	53.4	54.4	55.4	56.4	57.4

*In case special stroke please contact technical services.

VBC14S2

Motor direction

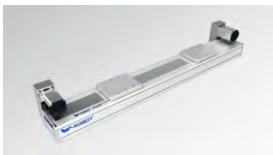

BU

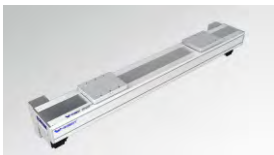

BD

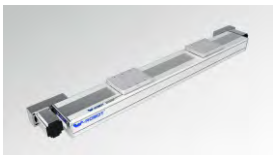

BLR

L100_BLR

Guide for Model Selection

VBC14S2 — L50 — S100 — BLR — ZP40B — C6 — ____

Base Style	
V	V series
BC	Cleanse Belt Type
14	Body width140

Leather belt Type	
L	Clean belt
X	Rubber belt
Lead	
50	50mm
100	100mm

Stroke(mm)
100-3000

Motor way	
BLR	Right/Left Side
BU	Upper Side
BD	Down Side

Motor Type		Motor power	
P	Panasonic	20	200W
M	Mitsubishi	40	400W
Y	Yaskawa	75	750W
T	Delta	Brakes	
* For Z: Motor is from clients		No	No brake
		B	With brake

Original Sensor position		Sensor switch	
External		External	
C	Motor side	2	2pcs
D	Oppsite motor side	6	6pcs
E	No	No sensor	

Non-standard, d.c.,	
No	Standard type
BL1	Detailed information please see page032
B2	
D01	
U01	
UD01	
H01	
HU01	
HD01	
HUD01	
M01	
S01	

Motor Qty	
S2	Dual motor runing a repeat stroke

Sensor type	
No	NPN
P	PNP

VBC14S2

W-ROBOT® Linear Drives

Specification

Motor power AC (W)		400W	
Drive Type		Timing belt driving	
Repeatability		±0.04	
Lead(mm)		50	100
MaximumSpeed(mm/sec) 3000 Motor Speed(rpm/mim)		2500	5000
Maximum Payload(kg)	Horizontal	*20	*10
	Vertical		
RatedThrust(N)		150	75
Linear Guide (mm)		20x15.5-2	
Home Sensor		Outside EE-SX672(NPN) EE-SX672P(PNP)	
		Outside Guide EE-SX674(NPN) EE-SX674P(PNP)	

Wiring drawing of inductor(original point and endpoint)

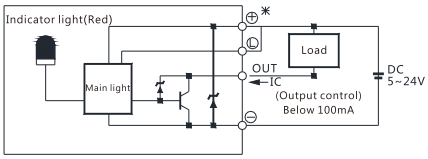

(Figure 1)

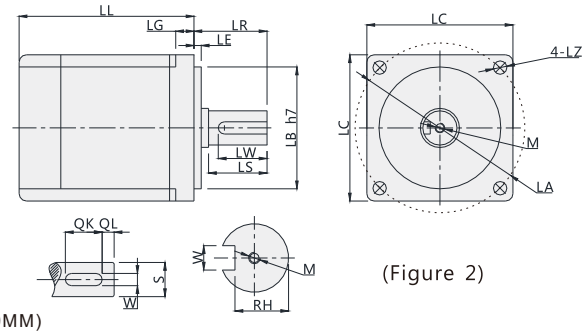

(Figure 2)

*Horiz payload 20KG just one slding rack required(Lead 50MM)/10KG(Lead100MM)
*Within horiz ACC 5m/sec^2 (Properly increased ACC while payload is reducing)

Servo Motor Matches List

(Table 1)

Servo motor size																			
Power(W)	Brand	Type		LL	LL(Brakes)	LA	LE	LZ	LC	LG	LW	RH	W	LR	S	LB	M	QK	QL
200W	Panasonic	MHMJ022G1□	V:With brake U:No brake	99	135.5	70	3	4.5	60	6.5	20	8.5	4h9	30	11h6	50h7	M4x8L	-	-
	Delta	ECMA-C20602□S	S:With brake R:No brake	105.5	141.5	70	3	5.5	60	7.5	20	11	5	30	14h6	50h7	M4x15L	-	-
	Mitsubishi	HC-KFS23□K	B:With brake □:No brake	99.5	131.5	70	3	5.8	62	7	-	-	-	30	14h6	50h7	-	-	-
400W	Panasonic	MHMJ042G1□	V:With brake U:No brake	118.5	155.5	70	3	4.5	60	6.5	20	11	5h9	30	14h6	50h7	M5x10L	-	-
	Delta	ECMA-C20604□S	S:With brake R:No brake	130.7	166.6	70	3	5.5	60	7.5	20	11	5	30	14h6	50h7	M4x15L	-	-
		ECMA-C20804□S	S:With brake R:No brake	112.3	152.8	90	3	6.6	80	8	20	11	5	35	14h6	70h7	M4x15L	-	-
	Mitsubishi	HC-KFS43□K	B:With brake □:No brake	124.5	165.5	70	3	5.8	62	7	-	-	-	30	14h6	50h7	-	-	-
750W	Panasonic	MHMJ082G1□	V:With brake U:No brake	127.2	164.2	90	3	6	80	8	25	15.5	6h9	35	19h6	70h7	M5x10L	-	-
	Delta	ECMA-C20807□S	S:With brake R:No brake	138.3	178	90	3	6.6	80	8	25	15.5	6	35	19h6	70h7	M6x20L	-	-
		ECMA-C20907□S	S:With brake R:No brake	130.2	161.3	100	3	6.6	86	8	20	13	5	35	16h6	80h7	M5x15L	-	-
	Mitsubishi	HC-KFS73□K	B:With brake □:No brake	142	177.5	90	3	6.6	82	8	-	-	-	40	19h6	70h7	-	-	-

□ Stand for empty

Max. Payload Diameters Table

(Unit : mm)

Horizontal installation	A	B	C
10kg	2800	1800	1250
20kg	2200	950	750
30kg	1800	650	550

Wall installation	A	B	C
10kg	1170	1300	2200
20kg	700	630	1600
30kg	450	380	1250

Max. Static Torque Table

(Unit : N.m)

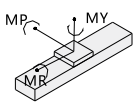

Maximum static torque	
MY	392
MP	394
MR	345

BLR: Right Side —— Motor with coupling connecting

Unit (mm)

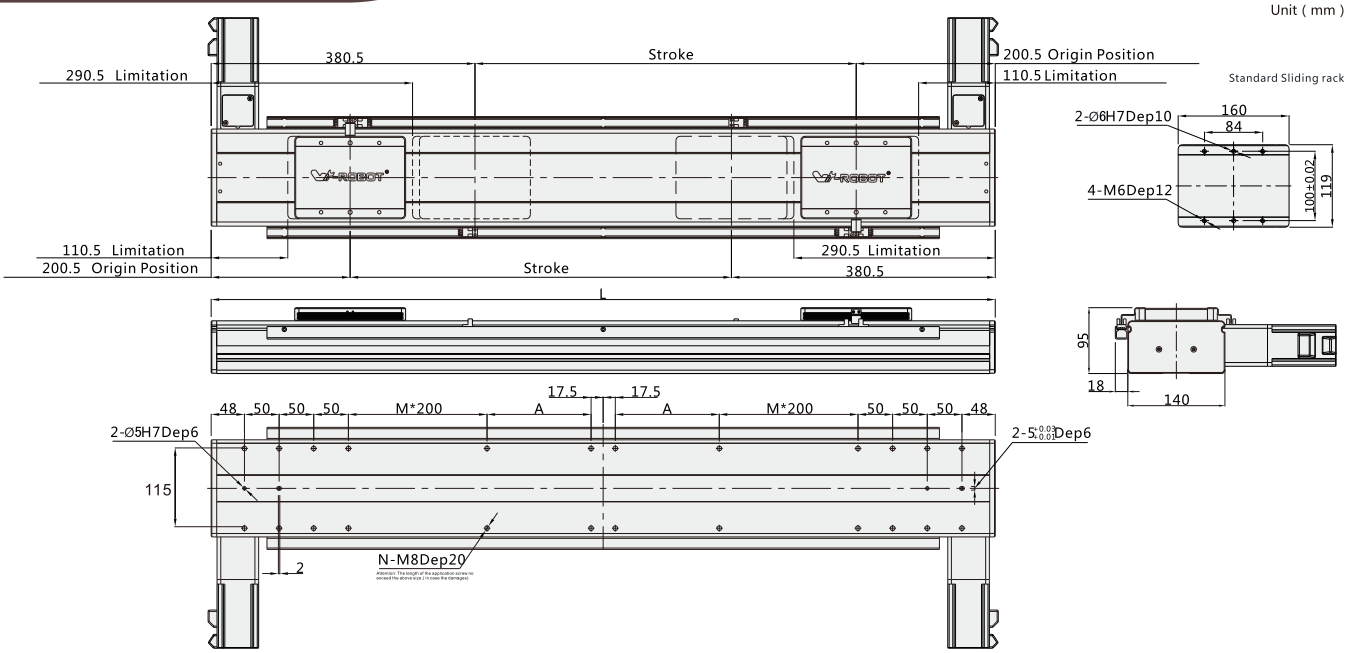

Note: Not including motor weight.

Working Stroke	100	150	200	250	300	350	400	450	500	550	600	650	700	750	800	850	900	950	1000	1050	1100	1150	1200	1250	1300	1350	1400	1450	1500
L	681	731	781	831	881	931	981	1031	1081	1131	1181	1231	1281	1331	1381	1431	1481	1531	1581	1631	1681	1731	1781	1831	1881	1931	1981	2031	2081
M	0	0	0	0	1	1	1	1	1	1	1	1	2	2	2	2	2	2	2	2	3	3	3	3	3	3	3	3	4
N	20	20	20	20	24	24	24	24	24	24	24	24	28	28	28	28	28	28	28	28	32	32	32	32	32	32	32	32	36
A	125	150	175	200	25	50	75	100	125	150	175	200	25	50	75	100	125	150	175	200	25	50	75	100	125	150	175	200	25
Weight KG	28.4	29.4	30.4	31.4	32.4	33.4	34.4	35.4	36.4	37.4	38.4	39.4	40.4	41.4	42.4	43.4	44.4	45.4	46.4	47.4	48.4	49.4	50.4	51.4	52.4	53.4	54.4	55.4	56.4

*In case special stroke please contact technical services.

BLR: Right Side

Unit (mm)

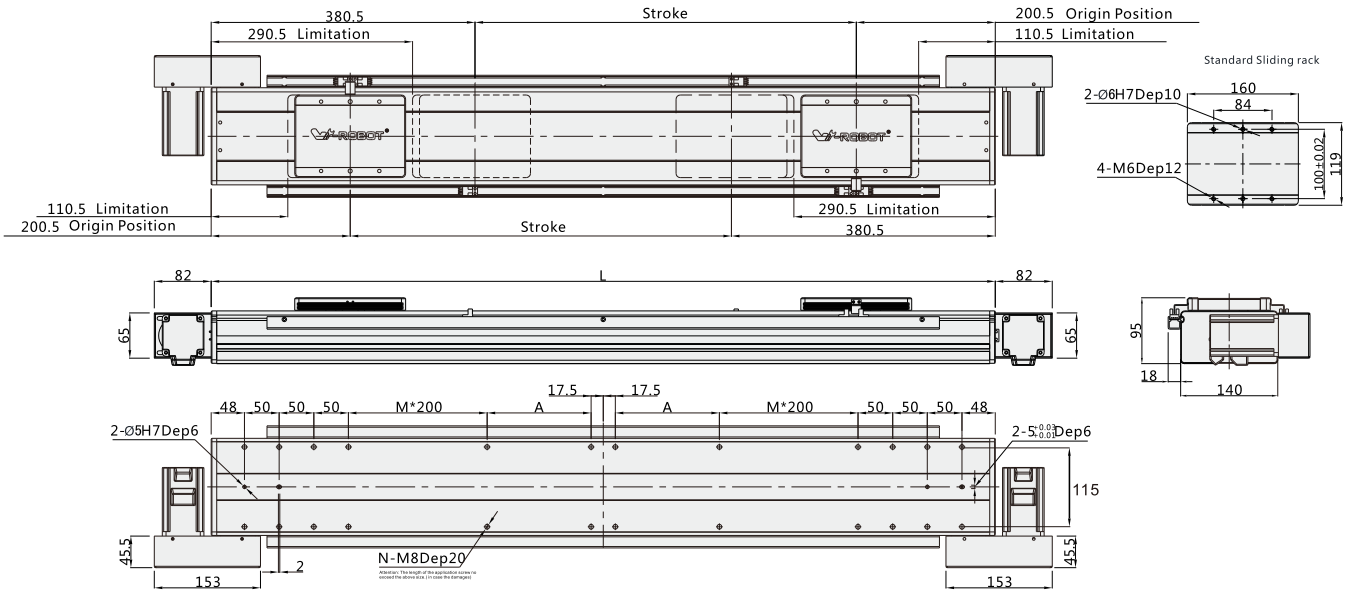

Note: Not including motor weight.

Working Stroke	100	150	200	250	300	350	400	450	500	550	600	650	700	750	800	850	900	950	1000	1050	1100	1150	1200	1250	1300	1350	1400	1450	1500
L	681	731	781	831	881	931	981	1031	1081	1131	1181	1231	1281	1331	1381	1431	1481	1531	1581	1631	1681	1731	1781	1831	1881	1931	1981	2031	2081
M	0	0	0	0	1	1	1	1	1	1	1	1	2	2	2	2	2	2	2	2	3	3	3	3	3	3	3	3	4
N	20	20	20	20	24	24	24	24	24	24	24	24	28	28	28	28	28	28	28	28	32	32	32	32	32	32	32	32	36
A	125	150	175	200	25	50	75	100	125	150	175	200	25	50	75	100	125	150	175	200	25	50	75	100	125	150	175	200	25
Weight KG	29.4	30.4	31.4	32.4	33.4	34.4	35.4	36.4	37.4	38.4	39.4	40.4	41.4	42.4	43.4	44.4	45.4	46.4	47.4	48.4	49.4	50.4	51.4	52.4	53.4	54.4	55.4	56.4	57.4

*In case special stroke please contact technical services.

VBC14S2

V-ROBOT® Linear Drives

BU: Upper Side

Unit (mm)

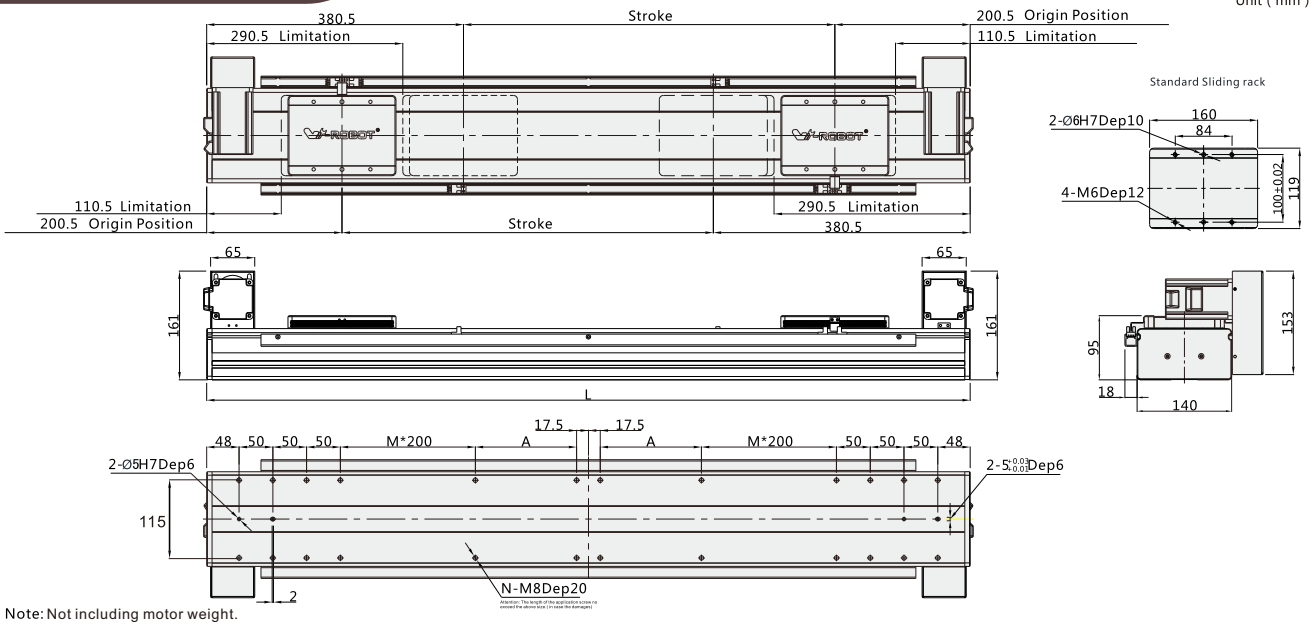

Note: Not including motor weight.

Working Stroke	100	150	200	250	300	350	400	450	500	550	600	650	700	750	800	850	900	950	1000	1050	1100	1150	1200	1250	1300	1350	1400	1450	1500
L	681	731	781	831	881	931	981	1031	1081	1131	1181	1231	1281	1331	1381	1431	1481	1531	1581	1631	1681	1731	1781	1831	1881	1931	1981	2031	2081
M	0	0	0	0	1	1	1	1	1	1	1	1	2	2	2	2	2	2	2	2	3	3	3	3	3	3	3	3	4
N	20	20	20	20	24	24	24	24	24	24	24	24	28	28	28	28	28	28	28	28	32	32	32	32	32	32	32	32	36
A	125	150	175	200	25	50	75	100	125	150	175	200	25	50	75	100	125	150	175	200	25	50	75	100	125	150	175	200	25
Weight KG	29.4	30.4	31.4	32.4	33.4	34.4	35.4	36.4	37.4	38.4	39.4	40.4	41.4	42.4	43.4	44.4	45.4	46.4	47.4	48.4	49.4	50.4	51.4	52.4	53.4	54.4	55.4	56.4	57.4

*In case special stroke please contact technical services.

BD: Down Side

Unit (mm)

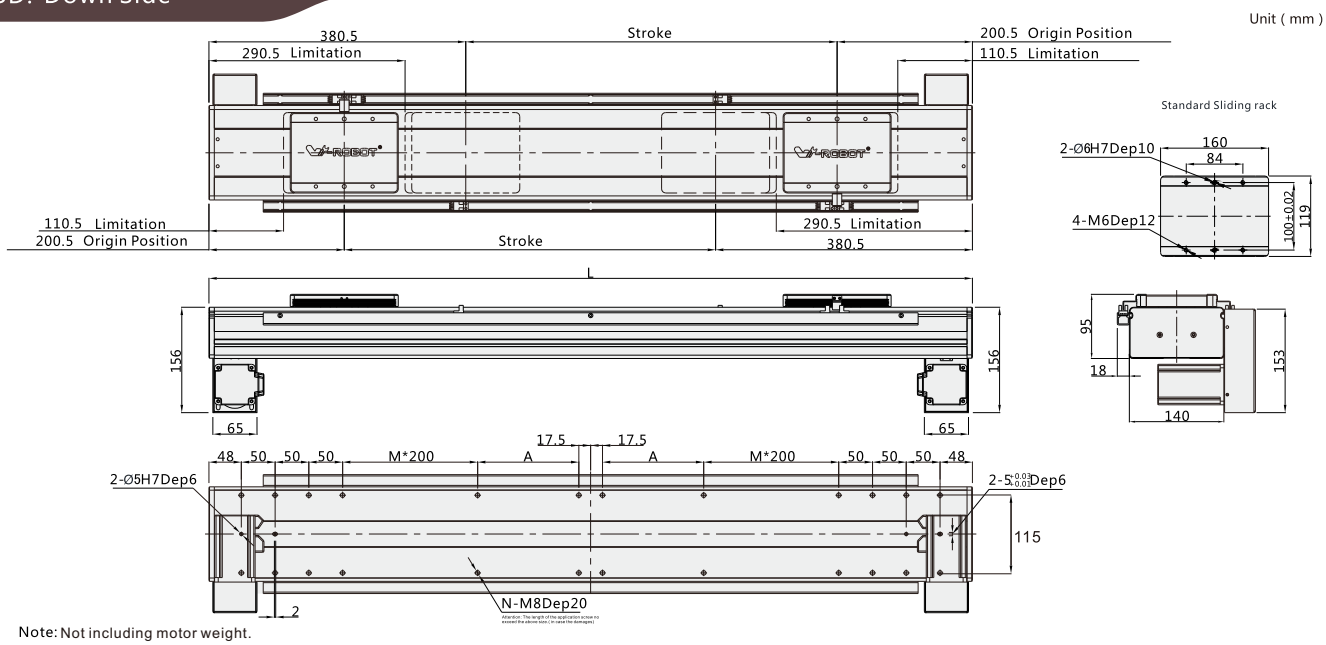

Note: Not including motor weight.

Working Stroke	100	150	200	250	300	350	400	450	500	550	600	650	700	750	800	850	900	950	1000	1050	1100	1150	1200	1250	1300	1350	1400	1450	1500
L	681	731	781	831	881	931	981	1031	1081	1131	1181	1231	1281	1331	1381	1431	1481	1531	1581	1631	1681	1731	1781	1831	1881	1931	1981	2031	2081
M	0	0	0	0	1	1	1	1	1	1	1	1	2	2	2	2	2	2	2	2	3	3	3	3	3	3	3	3	4
N	20	20	20	20	24	24	24	24	24	24	24	24	28	28	28	28	28	28	28	28	32	32	32	32	32	32	32	32	36
A	125	150	175	200	25	50	75	100	125	150	175	200	25	50	75	100	125	150	175	200	25	50	75	100	125	150	175	200	25
Weight KG	29.4	30.4	31.4	32.4	33.4	34.4	35.4	36.4	37.4	38.4	39.4	40.4	41.4	42.4	43.4	44.4	45.4	46.4	47.4	48.4	49.4	50.4	51.4	52.4	53.4	54.4	55.4	56.4	57.4

*In case special stroke please contact technical services.

V-ROBOT®

Linear Drives

Distributors for Australia & New Zealand

MOTION TECHNOLOGIES PTY LTD

24/22-30 Northumberland Road
Caringbah NSW 2229 Australia
Phone: (02) 9524 4782

sales@motiontech.com.au
www.motiontech.com.au

© 09/11/2020