RSF Elektronik

www.rsf.at

INCREMENTAL LINEAR ENCODERS

Sealed Versions

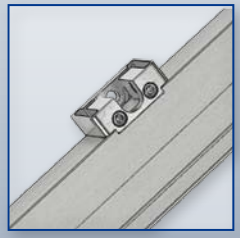

RSF Elektronik, Corporate Head Quarters Tarsdorf, Austria

RSF Elektronik, Manufacturing Subsidiary Chotěšov, Czech Republic

High-precision linear measuring systems and industrial electronics "Made in Austria" for cutting-edge positioning solutions

RSF Elektronik is one of the world's leading companies in the field of electronic linear measuring systems and it offers an extensive portfolio which includes almost all designs which are required by the market. The typical resolutions or measuring steps range from a few micrometres down to the nanometre range. Another core element of the product range are high-precision and resistant graduations which are manufactured in thin-layer technology on glass or other carrier substrates. RSF Elektronik also develops customized cable systems for the widest range of sectors and areas of application, and these are manufactured by the Chotěšov subsidiary. In order to safeguard the company's high quality standard, a comprehensive quality assurance and environmental management system – certified according to DIN EN ISO 9001 and DIN EN ISO 14001 – has been put in place. Thanks to the company's extensive distribution network, optimum customer service is guaranteed in practically all regions.

TABLE OF CONTENTS

DESIGN AND OPERATION

The Linear Encoders from RSF are all-purpose. They are suited for manual applications; yet they are also particularly suitable for closed-loop drive systems.

Owing to their sealed design, the Linear Encoders of the **MSA 4, MSA 5, MSA 7** and **MSA 8** series are predestined for usage in **machine tools**. They are also very well suited for applications in **automation** and **production technology**, in which a protection for scale and reading head is required.

MSA 4, MSA 5, MSA 7 and **MSA 8** represent a systematic advancement of tried-and-tested systems and feature improved construction details. During development, RSF paid particular attention to the optimization of system accuracy. We achieved this goal thanks to the perfect combination of several individual components. Beyond that, details that are stressed more intensively were built to be more robust so as to heighten long-term stability.

Measuring systems are made up of two components: **extrusion** and **reading head**. Preferably, the extrusion is to be mounted on the moveable part of the linear axis, and the reading head to the fixed part (cable duct) of the linear axis. The **extrusion** consists of a stable aluminum profile, fastening elements, a scale and sealing lips.
Drip caps at the profile and specially formed sealing lips prevent the intrusion of dust, filings and liquids into the extrusion.

The fiber-reinforced **sealing lips** made of fluororubber (Viton®) are highly lubricant-resistant and coolant-resistant. High velocities are feasible due to the high degree of rigidity, coupled with the ideally formed blade area of the reading head. Optionally, a sealing air inlet for a greater demand for tighter sealing is on offer.

The **scale** is fastened by dint of a flexible adhesive film in the profile, which compensates for the differing linear expansion between the glass or glass ceramics and the aluminum. Thus a **reproducible thermal behavior** is ensured (symmetrical expansion or shortening of the scale to the profile in case of temperature changes). The scale can be fixed additionally in the profile in order to adjust the thermal zero point to each measuring requirement. Expansion differences between aluminum profile and machine slide are evened out by flexible fastening elements.

Depending on the model, the **reading head** is available with cable or device connector plug. The reading head houses the evaluation electronics.
The **reading carriage** includes a reticle and the optoelectronics for signal generating. Reading head and reading carriage are coupled to each other.

Hall-sensors are integrated in the reading head, which generate switch signals for an additional position detection or enable a selection of reference marks. They are activated by magnets that can be optionally positioned in any way on the extrusion by the customer.

The **reading carriage** evens out alignment deviations between extrusion and machine guide. It rolls by dint of roller bearings on the scale and is pressed down by magnets that affect the ferromagnetic tapes on the extrusion (**magnet guide**). Hence there are no forces between reading head and extrusion that could stress guide parts of the linear axis. Moreover, the extrusion is not subjected to any bending strain.

In the measuring direction, reading carriage and reading head are connected by a wear-free and maintenance-free **magnetic coupling**. A ferromagnetic ball rolling freely between two magnetic plates makes for a connection that is very stiff in the measuring direction, yet flexible in all other degrees of freedom. Thus any deviation (within the tolerance) will be evened out by the ideal mounting of the measurement system.

The combination of magnetic guide and magnetic coupling allows for generous mounting tolerances without any negative influence on accuracy. Hence substantial benefits are achieved in comparison to traditional technologies.

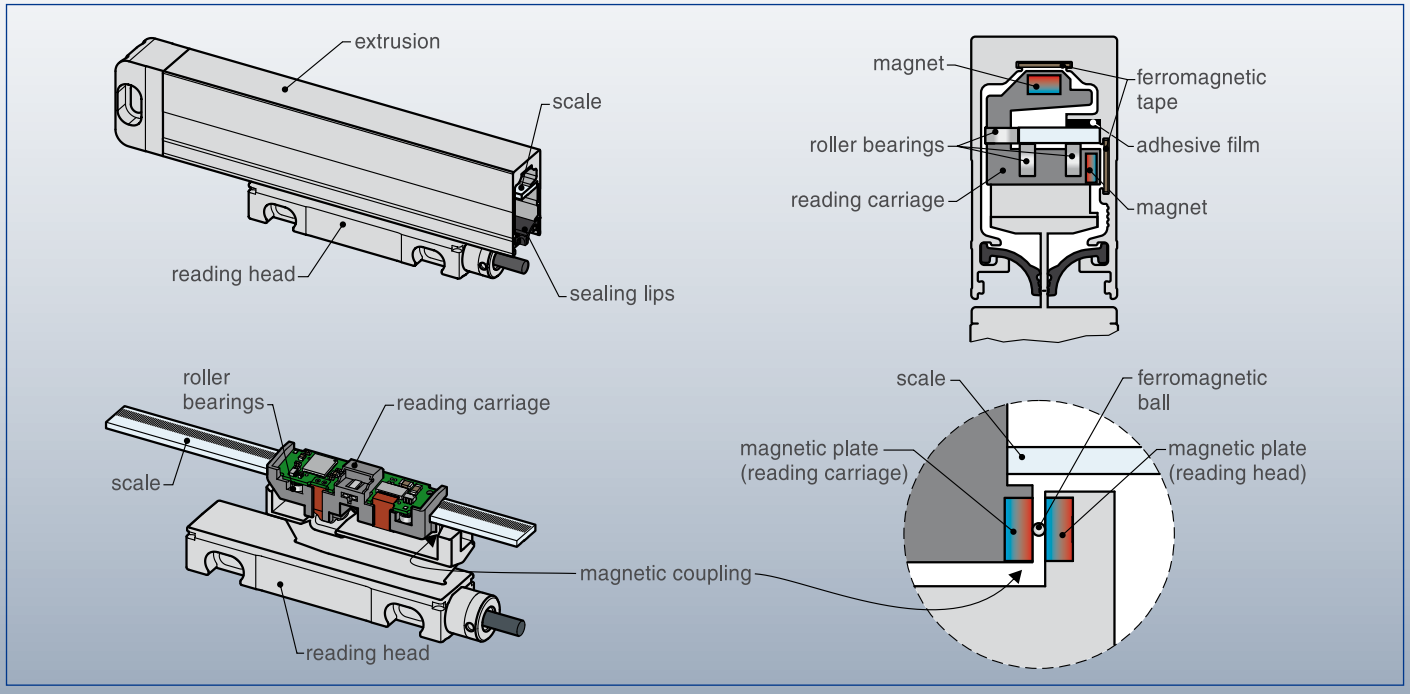

A high accuracy grating is deployed as scale graduation. Depending on the model, glass ($\alpha \approx 8{,}5 \times 10^{-6}$/K) or glass ceramics ($\alpha \approx 0 \times 10^{-6}$/K) is employed as base.

The grating is the consistent series of lines and spaces of the same width. The width of one line and one space is called a grating pitch (T).

Parallel to the grating, there are one or more reference marks (RI) on a second track. Within the measuring length, any position is possible and additional reference marks can be chosen at will in a distance of 50 mm.

Linear Encoders with a suffix "**K**" in the model designation are equipped with distance-coded reference marks. After traveling a distance of 20 mm at maximum, the absolute tool position is available with these models. By dint of the optical scanning, a position-accurate evaluation of the reference marks is ensured.

Scale unit

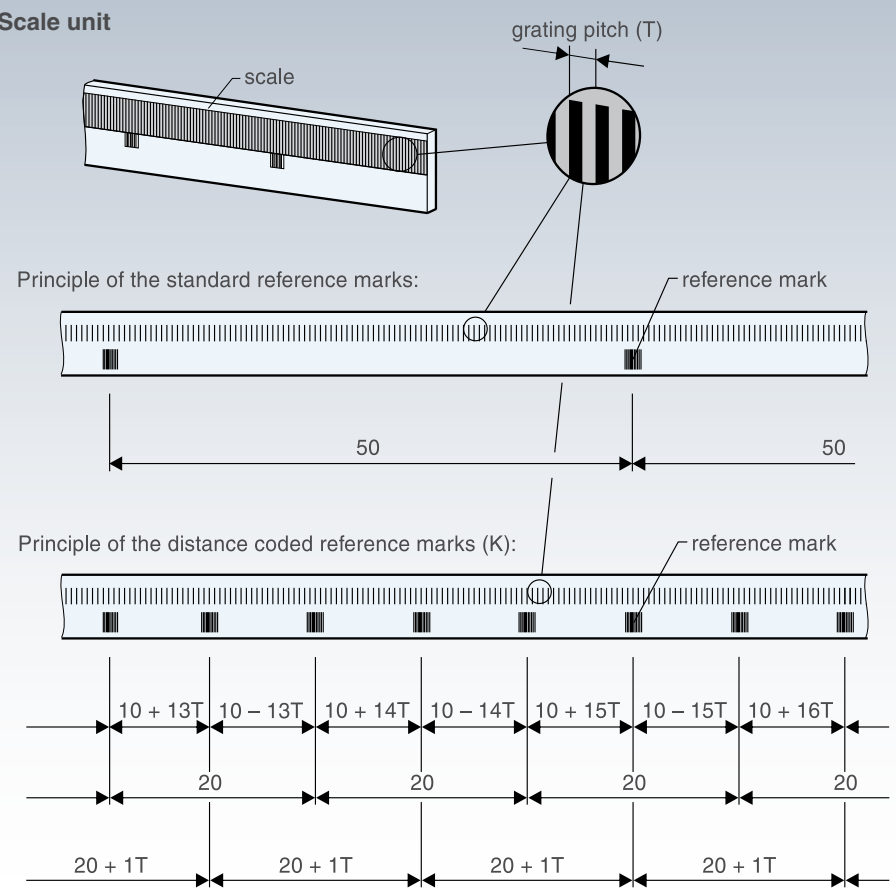

The incremental Linear Encoders work according to an imaging photoelectric measuring principle with a transmissive **singlefield scanning**.

The regulated light of an infrared LED is collimated by a condenser lens, passes through the grid of the reticle and the scale and generates a periodic intensity distribution on the structured sensor.

The sensor generates sinusoidal signals of the highest quality that prove to be widely insensitive to possible contaminations, which can never be entirely ruled out despite all technical precautions.

The regulation of the LED ensures a constant light output, guaranteeing stability in the case of temperature fluctuations as well as with long-run operation.

Transmissive singlefield scanning

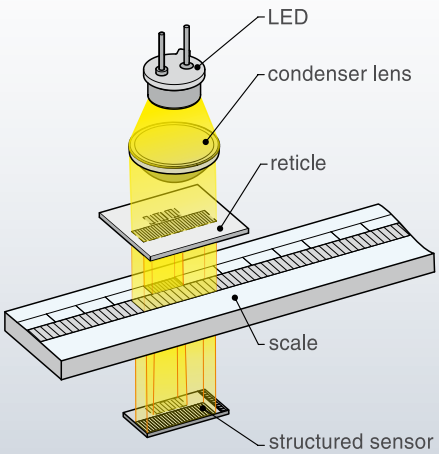

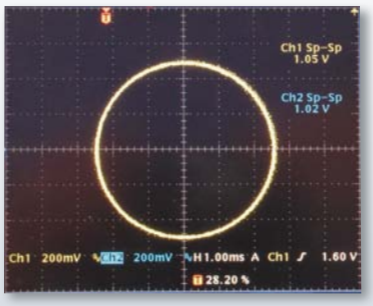

OUTPUT SIGNALS

Sinusoidal voltage signals 1Vpp

(drawing shows “positive counting direction”)
Two sinusoidal voltage signals A1 and A2 and one reference mark signal (all with inverted signals).

Power supply: +5 V ±5 %, max. 150 mA (unloaded)
Track signals (differential voltage A1 to $\overline{A1}$ resp. A2 to $\overline{A2}$):
Signal amplitude 0.6 Vpp to 1.2 Vpp; typ. 1 Vpp
(with terminating impendance Zo = 120 Ω between A1 to $\overline{A1}$ resp. A2 to $\overline{A2}$)

Reference mark (differential voltage RI to $\overline{RI}$):
Square-wave pulse with an amplitude of 0.8 to 1.2 V; typ. 1 V
(with terminating impedance Zo = 120 Ω between RI to $\overline{RI}$)

Advantage:
High traversing speed with long cable lengths possible

Voltage signals (1 Vpp)

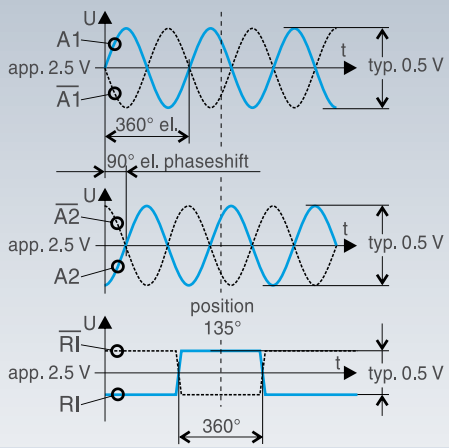

Square-wave signals

(drawing shows “positive counting direction”)
With a Schmitt-Trigger (for times 1) or interpolation electronics (for times 2, -5, -10, -20, -25, -50 or -100) the photoelement output signals are converted into two square-wave signals that have a phase shift of 90°.
Output signals either can be "single ended" or Line Driver "differential" (RS 422).
The resolution equates to the distance between two edges of the square-wave signals.

The controls/DRO´s must be able to detect each edge of the square-wave signals.
The minimum edge separation a_{min} is listed in the technical data and refers to a measurement at the output of the interpolator (inside the scanning head).
Propagation-time differences in the Line Driver, the cable and the Line Receiver reduce the edge separation.

Propagation-time differences:

Line Driver:	max. 10 ns
Cable:	0.2 ns per meter
Line receiver:	max. 10 ns refered to the recommended Line Receiver circuit

To prevent counting errors, the controls/DRO´s must be able to process the resulting edge separation.

Example:
a_{min} = 125 ns, 10 m cable
125 ns - 10 ns - 10 x 0.2 ns - 10 ns = 103 ns

Power supply: +5 V ±5%, max. 180 mA (unloaded)

Advantage:
- Noise immune signals
- No further subdividing electronics necessary

Square-wave signals „differential“

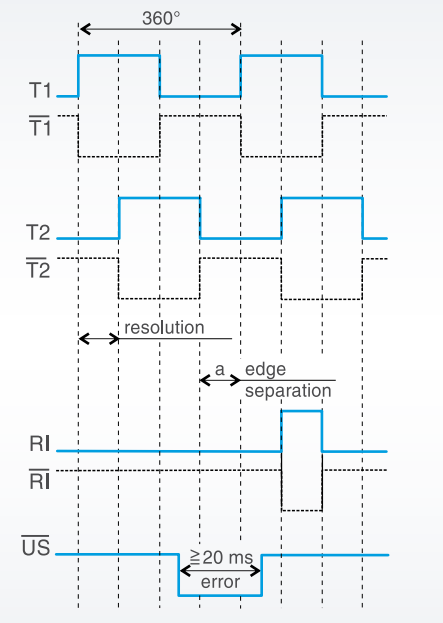

Recommended Line Receiver circuit

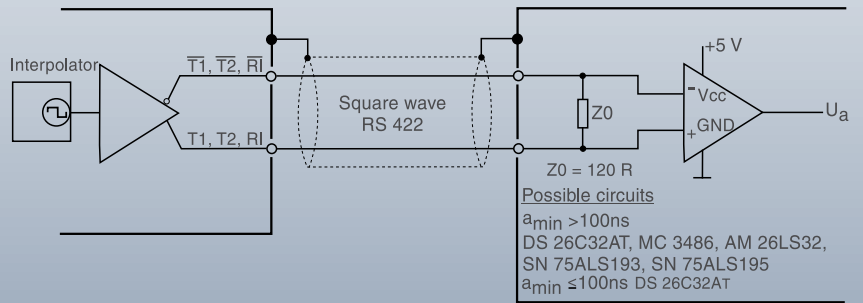

„Positive counting direction“

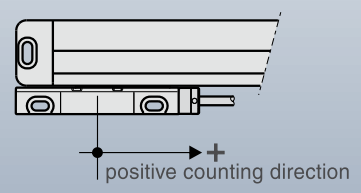

CONNECTING CABLE, SHIELDING

Definition of cable length

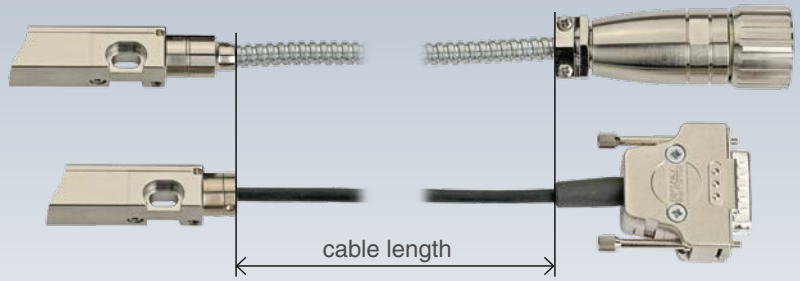

Cable outlet left side possible on request

According to the specific signal outputs of the Encoder, several connectors are possible. Standard cable length is 3 m. The PUR-cable jacket is a special thermo-plastic, resistant to commercial coolants and lubricants.
Cables should be protected with a metallic armour if exposed to a harsh environment like „hot metal chips“.
The cables can be used in the following temperature ranges:
fixed cable mounting: –20 °C to +70 °C
continuous flexing: –5 °C to +70 °C

Shielding

Shielded PUR-cable, Ø: 4.3 mm
Bending radius fixed mounting: > 10 mm, continuous flexing: > 50 mm
Torsion: > 300.000 cycles
Drag chain: > 5.000.000 cycles

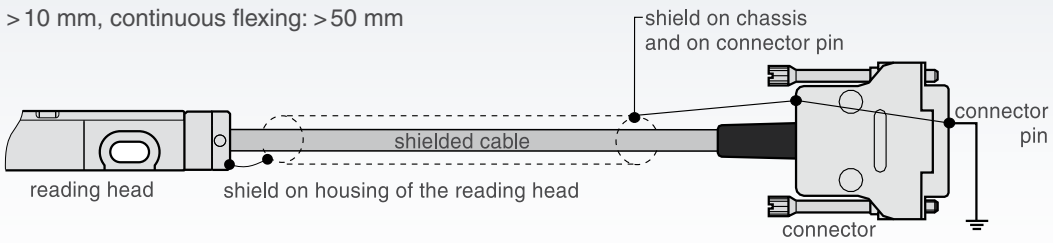

Detachable connecting cable MSA 5 and MSA 8

Cable length is graduated up to 9 m (other lengths on request)

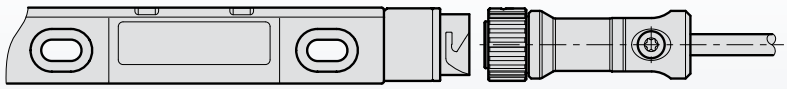

Max. permissible cable length according to power supply MSA 4, MSA 5, MSA 7 and MSA 8

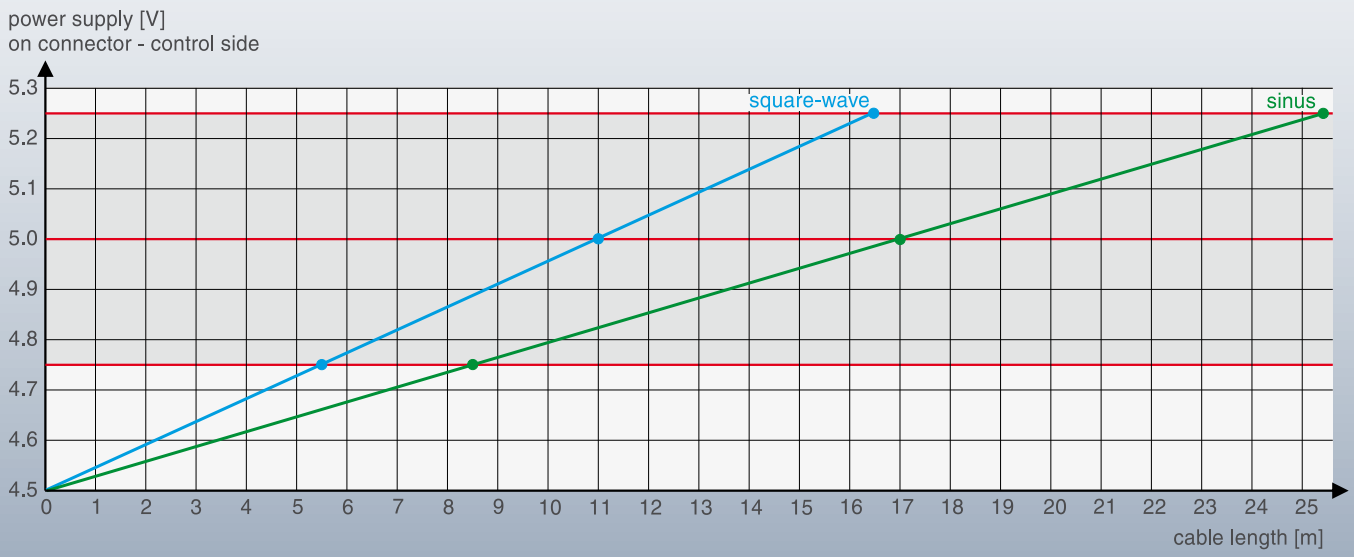

SWITCH SIGNAL OUTPUT

VERSION 1
TTL output (active high)

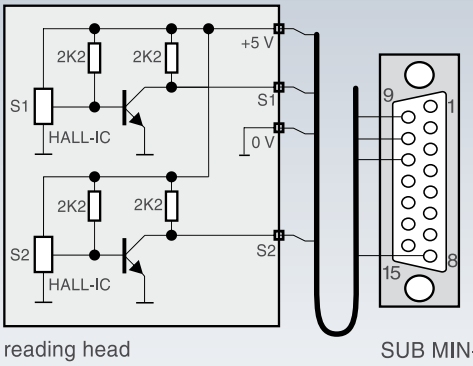

reading head

SUB MIN-D
connector 15-pin

S1, S2 = TTL output
I_{SOURCE} = 1 mA (high level > 2 V)
I_{SINK} = 20 mA (low level < 0.8 V)

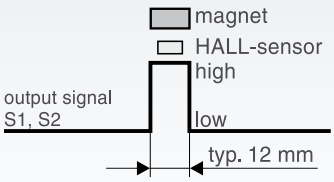

VERSION 2
open collector output (active high impedance)

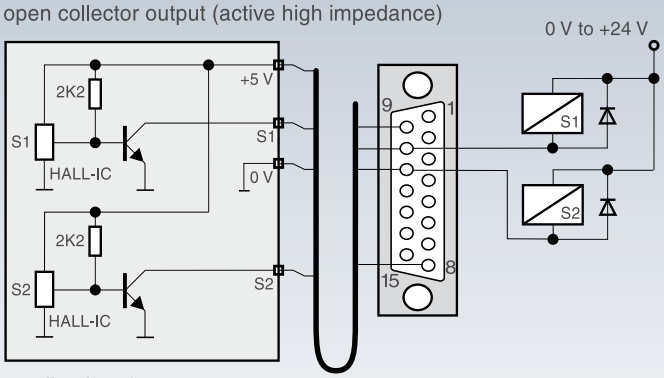

reading head

SUB MIN-D
connector 15-pin

S1, S2 = open collector output
I_{SINK} = 20 mA (low level < 0.8 V)

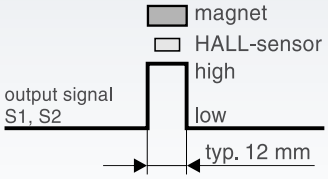

VERSION 3
TTL output (active low)

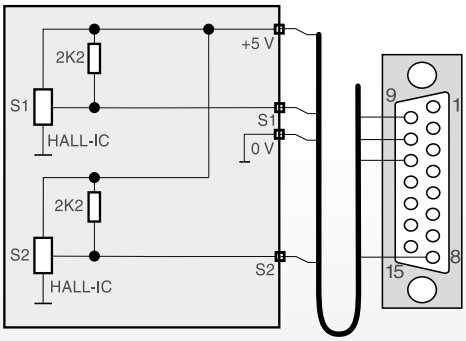

reading head

SUB MIN-D
connector 15-pin

S1, S2 = TTL output
I_{SOURCE} = 1 mA (high level > 2 V)
I_{SINK} = 20 mA (low level < 0.8 V)

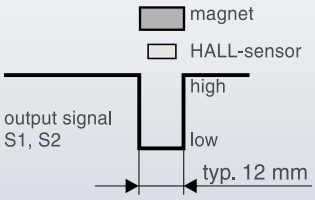

VERSION 4
open collector output (active low)

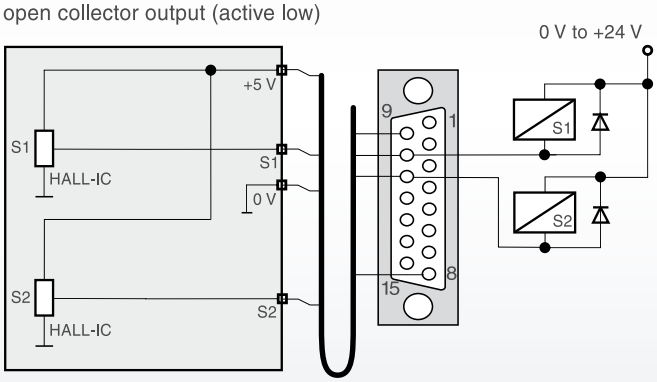

reading head

SUB MIN-D
connector 15-pin

S1, S2 = open collector output
I_{SINK} = 20 mA (low level < 0.8 V)

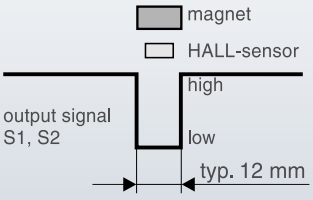

According to factory default setting the actuator magnets are placed at the beginning (S1) and at the end (S2) of measuring length.
The magnets can be moved by the customer.

ACCURACY

The accuracy of the Linear Encoders is classified with a „± tolerance“ in µm/m (e.g. ±5 µm/m).

The accuracy refers to any meter within the measuring length. For measuring lengths less than 1000 mm, the accuracy specification applies to the whole measuring length.

For best system accuracy, the encoder should be mounted near the machining level and as parallel as possible to the motion direction.

Example of a typical calibration chart for a MSA 810 scale:

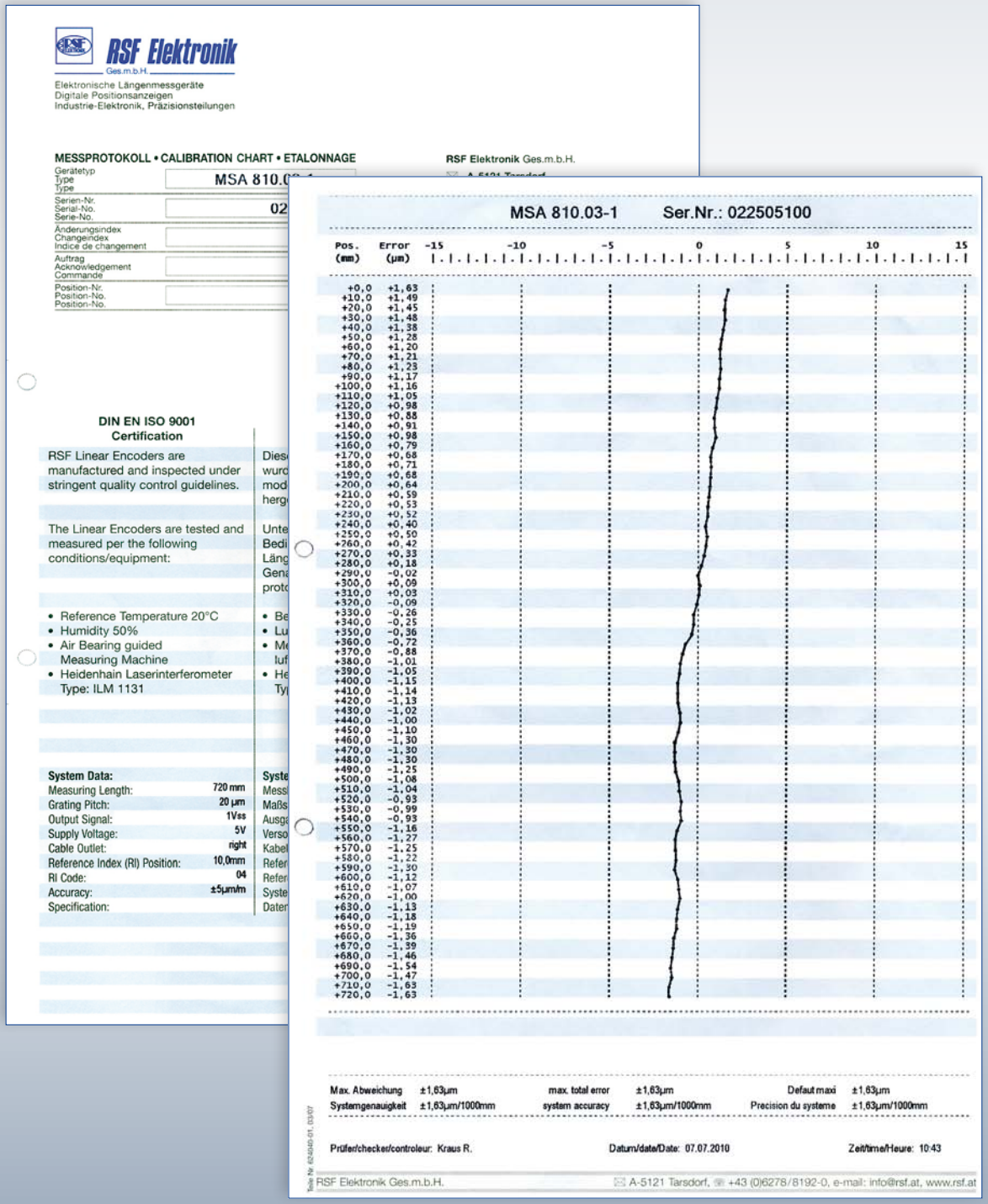

RSF Elektronik Ges.m.b.H.
Elektronische Längenmessgeräte
Digitale Positionsanzeigen
Industrie-Elektronik, Präzisionsteilungen

MESSPROTOKOLL • CALIBRATION CHART • ETALONNAGE

RSF Elektronik Ges.m.b.H.

Gerätetyp / Type / Type	MSA 810.0
Serien-Nr. / Serial-No. / Serie-No.	02
Änderungsindex / Changeindex / Indice de changement	
Auftrag / Acknowledgement / Commande	
Position-Nr. / Position-No. / Position-No.	

DIN EN ISO 9001 Certification

RSF Linear Encoders are manufactured and inspected under stringent quality control guidelines.

The Linear Encoders are tested and measured per the following conditions/equipment:

- Reference Temperature 20°C
- Humidity 50%
- Air Bearing guided Measuring Machine
- Heidenhain Laserinterferometer Type: ILM 1131

System Data:	
Measuring Length:	720 mm
Grating Pitch:	20 µm
Output Signal:	1Vss
Supply Voltage:	5V
Cable Outlet:	right
Reference Index (RI) Position:	10,0mm
RI Code:	04
Accuracy:	±5µm/m
Specification:	

MSA 810.03-1 Ser.Nr.: 022505100

Pos. (mm)	Error (µm)
+0,0	+1,63
+10,0	+1,49
+20,0	+1,45
+30,0	+1,48
+40,0	+1,38
+50,0	+1,28
+60,0	+1,20
+70,0	+1,21
+80,0	+1,23
+90,0	+1,17
+100,0	+1,16
+110,0	+1,05
+120,0	+0,98
+130,0	+0,88
+140,0	+0,91
+150,0	+0,98
+160,0	+0,79
+170,0	+0,68
+180,0	+0,71
+190,0	+0,68
+200,0	+0,64
+210,0	+0,59
+220,0	+0,53
+230,0	+0,52
+240,0	+0,40
+250,0	+0,50
+260,0	+0,42
+270,0	+0,33
+280,0	+0,18
+290,0	-0,02
+300,0	+0,09
+310,0	+0,03
+320,0	-0,09
+330,0	-0,26
+340,0	-0,25
+350,0	-0,36
+360,0	-0,72
+370,0	-0,88
+380,0	-1,01
+390,0	-1,05
+400,0	-1,15
+410,0	-1,14
+420,0	-1,13
+430,0	-1,02
+440,0	-1,00
+450,0	-1,10
+460,0	-1,30
+470,0	-1,30
+480,0	-1,30
+490,0	-1,25
+500,0	-1,08
+510,0	-1,04
+520,0	-0,93
+530,0	-0,99
+540,0	-0,93
+550,0	-1,16
+560,0	-1,27
+570,0	-1,25
+580,0	-1,22
+590,0	-1,30
+600,0	-1,12
+610,0	-1,07
+620,0	-1,00
+630,0	-1,13
+640,0	-1,18
+650,0	-1,19
+660,0	-1,36
+670,0	-1,39
+680,0	-1,46
+690,0	-1,54
+700,0	-1,47
+710,0	-1,63
+720,0	-1,63

Max. Abweichung	±1,63µm	max. total error	±1,63µm	Defaut maxi	±1,63µm
Systemgenauigkeit	±1,63µm/1000mm	system accuracy	±1,63µm/1000mm	Precision du systeme	±1,63µm/1000mm

Prüfer/checker/controleur: Kraus R. Datum/date/Date: 07.07.2010 Zeit/time/Heure: 10:43

RSF Elektronik Ges.m.b.H. A-5121 Tarsdorf, +43 (0)6278/8192-0, e-mail: info@rsf.at, www.rsf.at

SCALE OVERVIEW

SELECTION GUIDE

The Linear Encoders of the **MSA 4** and **MSA 7** series are equipped with a fixed connecting cable. Alternatively RSF offers the **MSA 5** and **MSA 8** series with a detachable connecting cable.
Depending on the electrical version the detachable connecting cable is available in graduated lengths up to 9 m (other lengths on request).

The Linear Encoders **MSA 7**xx and **MSA 8**xx series are characterized by a considerably improved thermal behavior.
Flexible fastening elements at the scale unit compensate repeatably the length-extension resp. -contraction, which appears due to temperature variations at the machine.

With a fixed fastening element (left side, middle or right side) a datum-point *(thermal fixed-point)* is defined.
Additionally it is also possible to fix the scale inside of the extrusion.

MSA 7XX.XX-X XX

- **Small** cross section
- Max. measuring length: up to 3040 mm (only at 20 µm grating pitch)
- Connecting cable
- System height: 46 resp. 54 mm

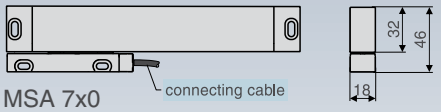

MSA 7x0

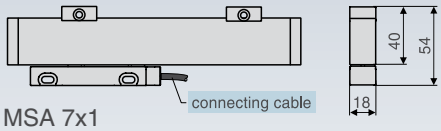

MSA 7x1

MSA 8XX.XX-X XX

- **Small** cross section
- Max. measuring length: up to 3040 mm (only at 20 µm grating pitch)
- Detachable connecting cable
- System height: 49 resp. 57 mm

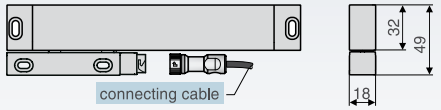

MSA 8x0

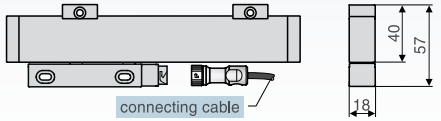

MSA 8x1

MSA 4XX.XX-X XX

- **Large** cross section
- Max. measuring length: up to 3040 mm (only at 20 µm grating pitch)
- Detachable connecting cable
- System height: 77 resp. 75 mm

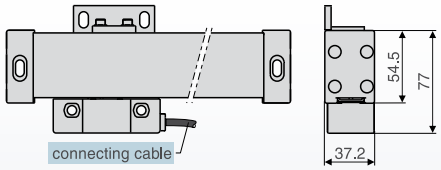

MSA 470

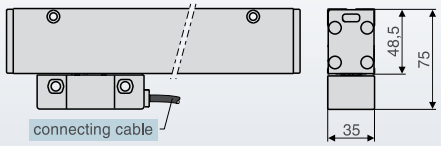

MSA 4x1

MSA 5XX.XX-X XX

- **Large** cross section
- Max. measuring length: up to 3040 mm (only at 20 µm grating pitch)
- Detachable connecting cable
- System height 77 resp. 75 mm

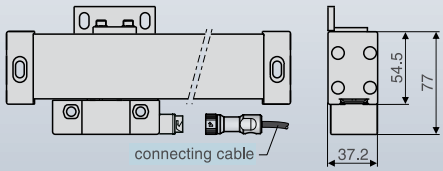

MSA 570

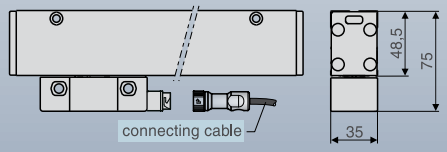

MSA 5x1

OVERVIEW, SELECTION GUIDE

Symbols:

= Fixed fastening element = Flexible fastening element = Additional fixed-point of the scale in the extrusion (optional)

MSA X70.XX-X XX

- Mounting holes at the ends
- Fixed fastening elements
- Max. measuring length:
  1240 mm (MSA 770, MSA 870)
  3040 mm (MSA 470, MSA 570)

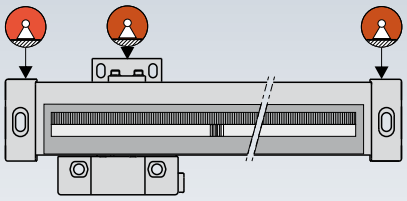

Available versions:
MSA 470, MSA 570 Page 24

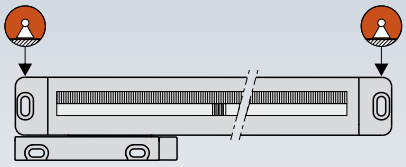

Available versions:
MSA 770, MSA 870 Page 16

MSA X10.XX-X XX

- Fixed mounting-point left
- Flexible fastening element right
- Max. measuring length: 1240 mm

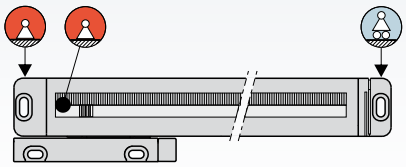

Available versions:
MSA 710, MSA 810 Page 17

MSA X20.XX-X XX

- Fixed mounting-point centered
- Flexible fastening element left and right
- Max. measuring length: 1240 mm

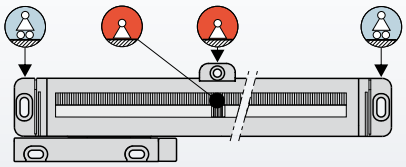

Available versions:
MSA 720, MSA 820 Page 18

MSA X30.XX-X XX

- Fixed mounting-point right
- Flexible fastening element left
- Max. measuring length: 1240 mm

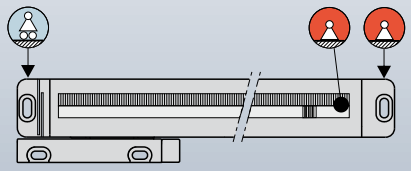

Available versions:
MSA 730, MSA 830 Page 19

OVERVIEW, SELECTION GUIDE

Symbols:

= Fixed fastening element = Flexible fastening element = Additional fixed-point of the scale in the extrusion (optional)

MSA X71.XX-X XX

- Mounting holes along the scale unit
- Fixed fastening elements
- Max. measuring length: 3040 mm (only at 20 µm grating pitch)

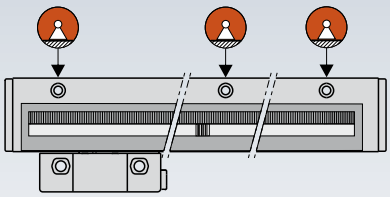

MSA 471, MSA 571 Page 25

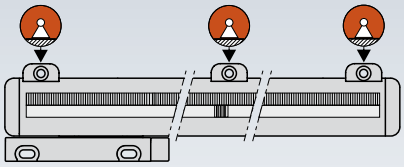

MSA 771, MSA 871 Page 20

MSA X11.XX-X XX

- Fixed mounting-point left
- All other fastening elements flexible
- Max. measuring length: 3040 mm (only at 20 µm grating pitch)

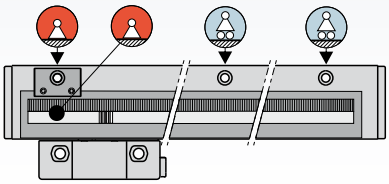

MSA 411, MSA 511 Page 26

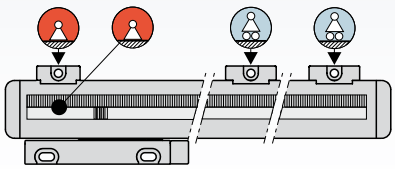

MSA 711, MSA 811 Page 21

MSA X21.XX-X XX

- Fixed mounting-point centered
- All other fastening elements flexible
- Max. measuring length: 3040 mm (only at 20 µm grating pitch)

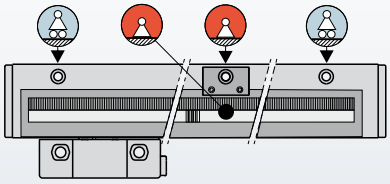

MSA 421, MSA 521 Page 27

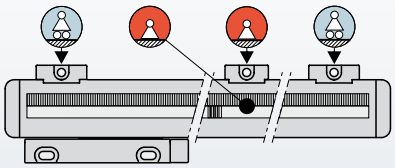

MSA 721, MSA 821 Page 22

MSA X31.XX-X XX

- Fixed mounting-point right
- All other fastening elements flexible
- Max. measuring length: 3040 mm (only at 20 µm grating pitch)

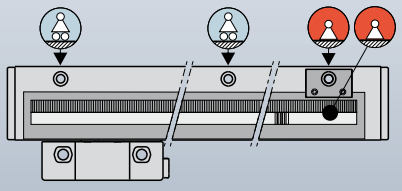

MSA 431, MSA 531 Page 28

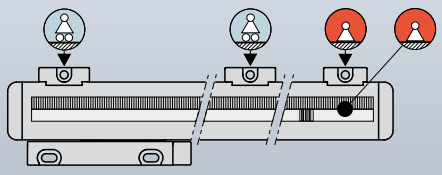

MSA 731, MSA 831 Page 23

NOMENCLATURE

Output signals and integrated subdividing

MSA XXX.XX-X XX

0 = sinusoidal voltage signals 1 Vpp
2 = square-wave signals, times 1
3 = square-wave signals, times 2
4 = square-wave signals, times 20
5 = square-wave signals, times 25
6 = square-wave signals, times 5
7 = square-wave signals, times 10
8 = square-wave signals, times 50
9 = square-wave signals, times 100

Grating pitch

MSA XXX.XX-X XX

0 = 8 µm
1 = 10 µm
3 = 20 µm

$$\text{Reachable system resolution [µm]} = \left(\frac{\text{grating pitch [µm]}}{\text{subdividing}}\right) : 4$$

Version of the switch signal
(only for Linear Encoders with actuator magnets)

MSA XXX.XX-X XX

-0 = without switch signals
-1 = TTL output (active high)
-2 = open collector output (active high impedance)
-3 = TTL output (active low)
-4 = open collector output (active low)

Possible options

MSA XXX.XX-X XX

K = distance-coded reference marks
N = all reference marks active
P = air inlet M5
F = fixed point-bonding scale with extrusion
B = glass ceramic scale

Example

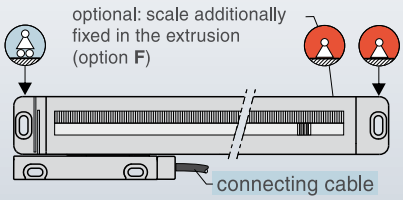

MSA 730.63-1 PF

Small cross section, reading head with connecting cable, mounting holes at the ends, fixed mounting point right, flexible fastening element left

Square-wave signals, integrated subdividing times 5

Grating pitch 20 µm

Switch signal with TTL output (activ high)

Air inlet, fixed point-bonding scale with the extrusion

TECHNICAL DATA MSA 4, MSA 5, MSA 7, MSA 8 SERIES

Scale model electronic version	Output signals	System resolution [µm]	Accuracy grades [µm/m]	Grating pitch [µm]	Integrated interpolation	Max. velocity [m/s]	Max. output frequency [kHz]
MSA xxx.**03**	∿ 1 Vpp	dep. on external interpolation	±3, ±5	20	--	2.0	100
MSA xxx.**01**	∿ 1 Vpp	dep. on external interpolation	±3, ±5	10	--	2.0	200
MSA xxx.**00**	∿ 1 Vp	dep. on external interpolation	±2, ±3, ±5	8	--	2.0	250
							Edge separation a_{min}
MSA xxx.**23**	⎍	5.0	±3, ±5	20	times 1	2.00	1.25 µs
MSA xxx.**33**	⎍	2.5	±3, ±5	20	times 2	2.00	625 ns
MSA xxx.**63**	⎍	1.0	±3, ±5	20	times 5	2.00	250 ns
MSA xxx.**73**	⎍	0.5	±3, ±5	20	times 10	1.92	250 ns
MSA xxx.**61**	⎍	0.5	±3, ±5	10	times 5	1.92	250 ns
MSA xxx.**71**	⎍	0.25	±3, ±5	10	times 10	0.96	250 ns
MSA xxx.**51**	⎍	0.1	±3, ±5	10	times 25	0.77	125 ns
MSA xxx.**81**	⎍	0.05	±3, ±5	10	times 50	0.38	125 ns
MSA xxx.**30**	⎍	1.0	±2, ±3, ±5	8	times 2	2.00	250 ns
MSA xxx.**70**	⎍	0.2	±2, ±3, ±5	8	times 10	0.77	250 ns
MSA xxx.**80**	⎍	0.04	±2, ±3, ±5	8	times 50	0.30	125 ns
MSA xxx.**90**	⎍	0.02	±2, ±3, ±5	8	times 100	0.15	125 ns

Standard measuring lengths (ML): [mm]	70, 120, 170, 220, 270, 320, 370, 420, 470, 520, 570, 620, 670, 720, 770, 820, 870, 920, 970, 1040, 1140, 1240, 1340, 1440, 1540, 1640, 1740, 1840, 1940, 2040, 2240, 2440, 2640, 2840, 3040 (only possible with 20 µm grating pitch), (8 or 10 µm grating pitch only possible up to measuring length 1140 mm) (other measuring lengths on request)
Scale unit:	■ Glass scale ($\alpha \approx 8.5 \times 10^{-6}$/K) ■ Glass ceramic scale ($\alpha \approx 0 \times 10^{-6}$/K) up to ML 1440 mm (longer measuring lengths on request)
Location of reference mark (RI):	■ Distance-coded reference mark (**K**) after travelling max. 20 mm the absolute position is available ■ Optional: one reference mark at any location additional reference marks can be selected by distances of n x 50 mm
Required moving force:	■ With standard sealing lips: < 2.0 N ■ With low drag respectively without any sealing lips: < 0.1 N
Environmental sealing acc. EN 60529:	■ With standard sealing lips: IP 53 ■ With DA 400: IP 64 (see Page 33)
Permissible vibration:	100 m/s² (40 up to 2000 Hz)
Permissible shock:	200 m/s² (8 ms)
Permissible temperature:	■ –20 °C up to +70 °C (storage) ■ 0 °C up to +50 °C (operation)
Weight of Linear Encoder (approx.):	■ MSA 470, MSA 570: 460 g+2.5 g/mm (ML) ■ MSA 4x1, MSA 5x1: 295 g+2.5 g/mm (ML) + 175 g (reading head without cable) ■ MSA 7xx , MSA 8xx: 75 g+0,57 g/mm (ML) + 50 g (reading head MSA **7**xx without cable) + 65 g (reading head MSA **8**xx without cable)
Weight of cable (approx.):	30 g/m
Power supply:	■ Sinusoidal voltage signals ∿ 1 Vpp +5 V ±5 %, max. 150 mA (unloaded) ■ Square-wave signals via Line Driver ⎍ +5 V ±5 %, max. 180 mA (unloaded)
RoHS-conformity:	The Linear Encoders of the MSA 4, MSA 5, MSA 7 and MSA 8 series comply with the guideline of the RoHS-directive 2011/65/EU on the restriction of the use of certain hazardous substances in electrical and electronic equipment

MSA 770, MSA 870

MSA 770

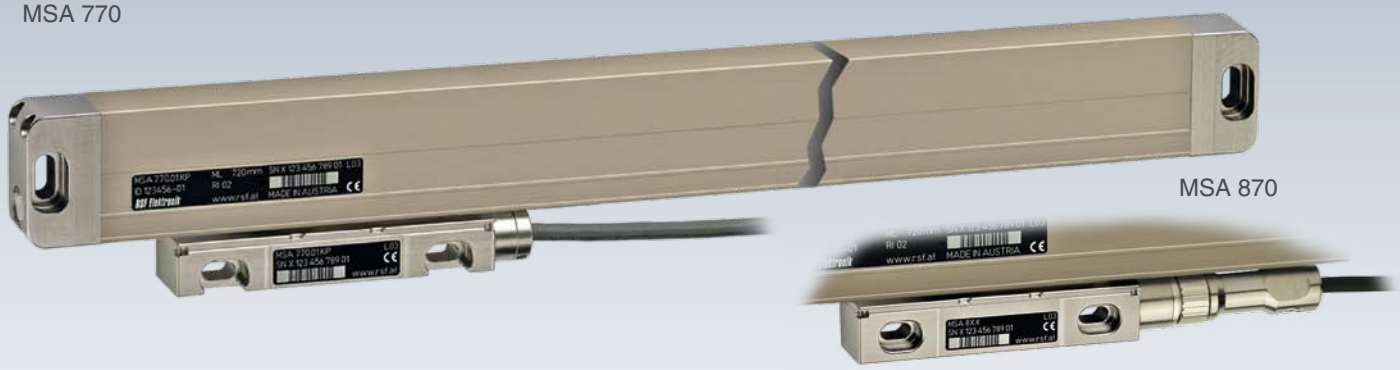

MSA 870

Dimensions, mounting tolerances MSA 770:

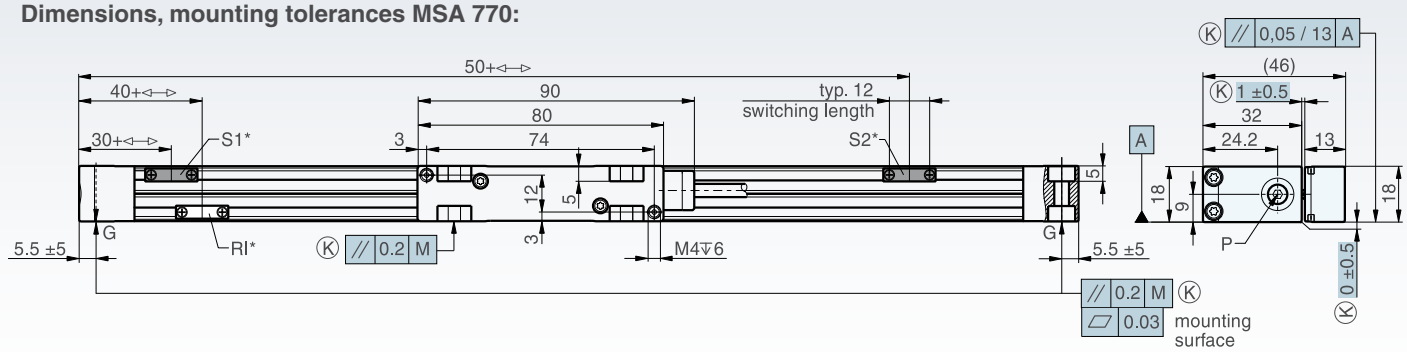

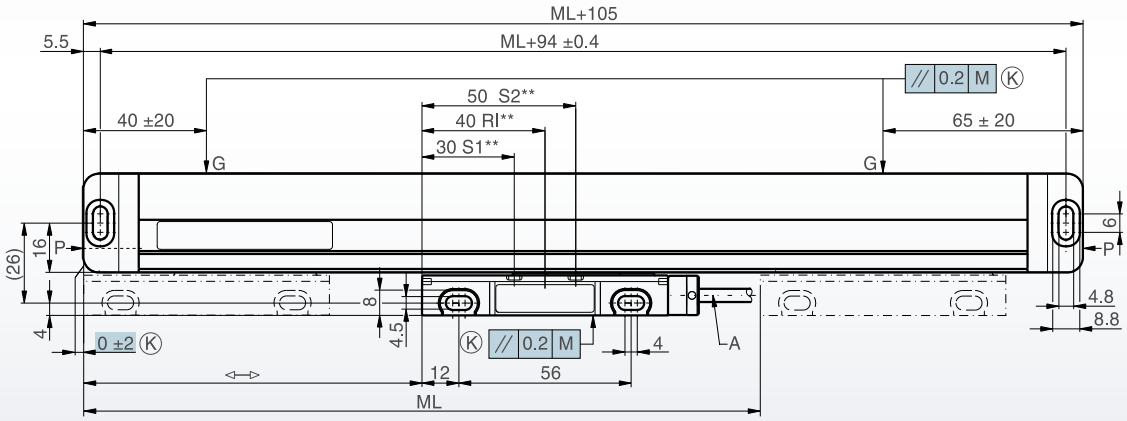

Dimensions, mounting tolerances MSA 870:

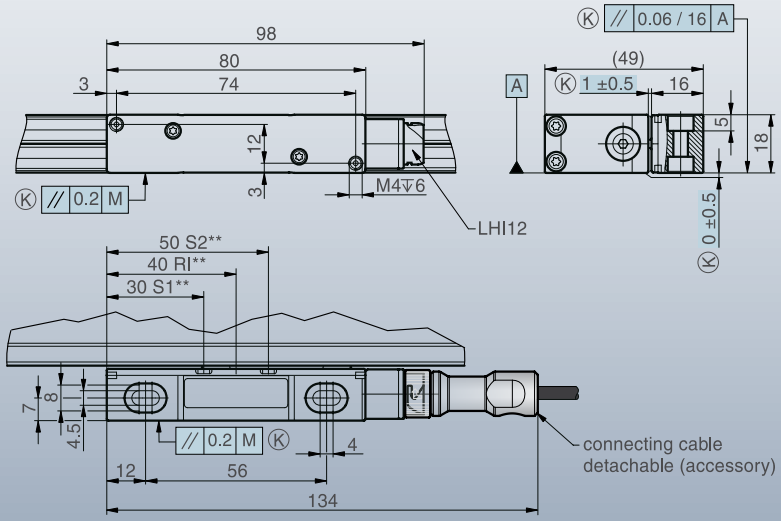

M	=	machine guideway
ML	=	measuring length
G	=	gauging points
◁▷	=	0 ... ML
A	=	cable
LHI12	=	male connector
Ⓚ	=	required mating dimensions

optional:

P	=	M5 air inlet
S1, S2	=	switch signals
RI	=	selectable reference mark
*	=	actuator magnet
**	=	sensor position

MSA 710, MSA 810

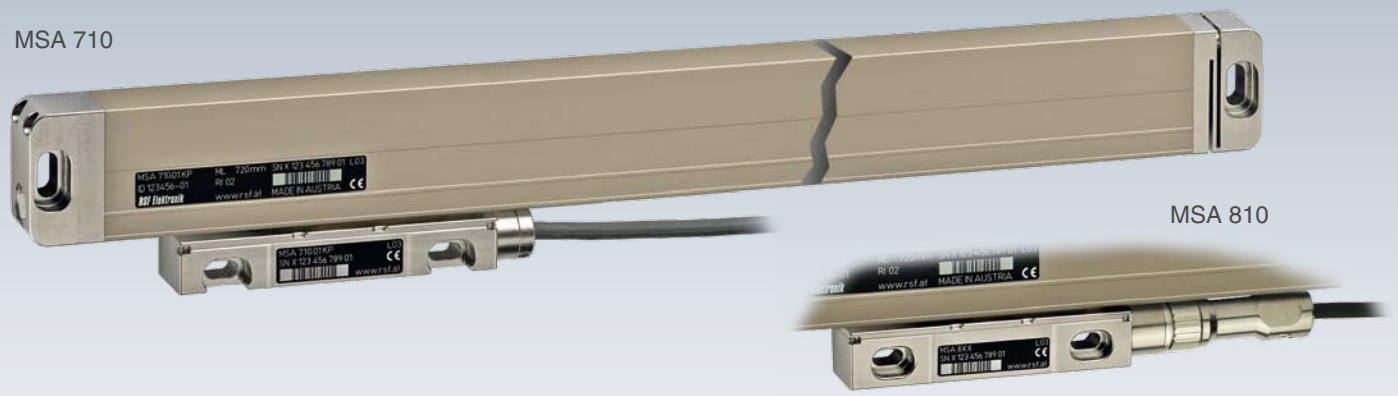

Dimensions, mounting tolerances MSA 710:

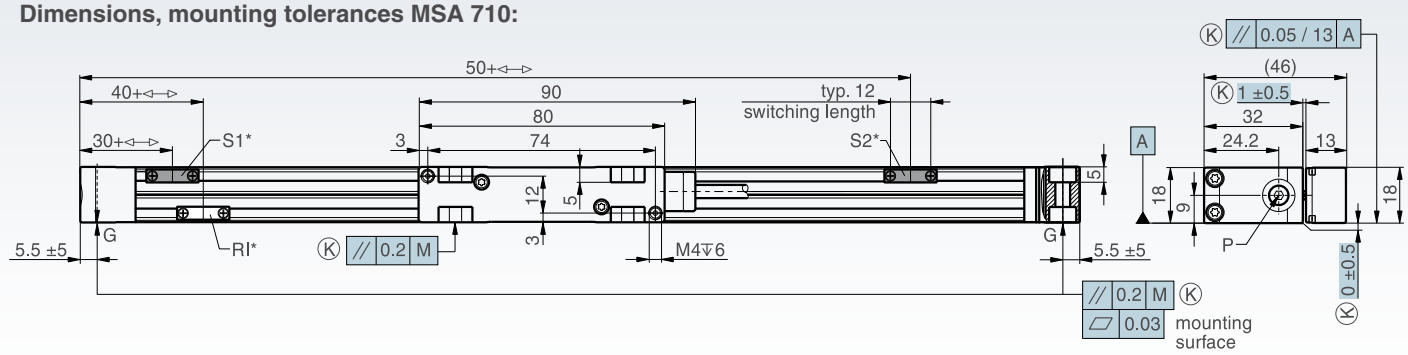

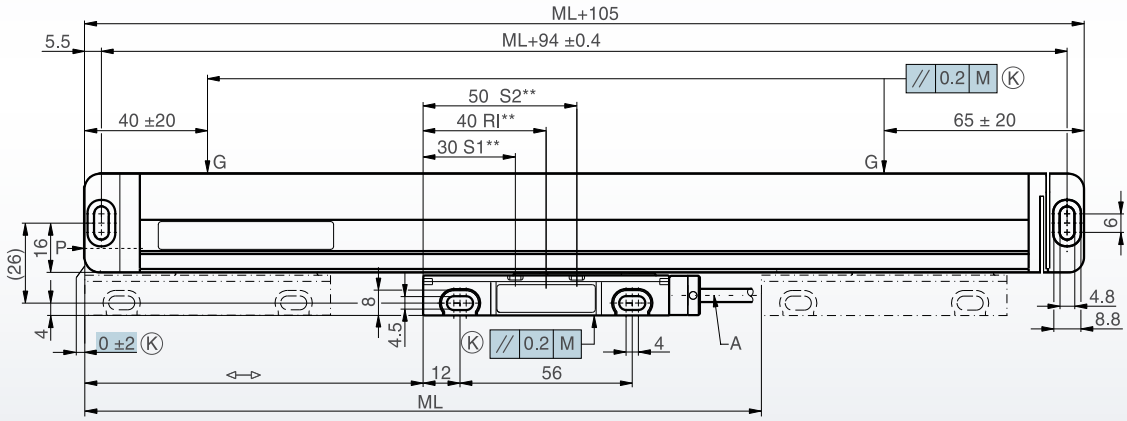

Dimensions, mounting tolerances MSA 810:

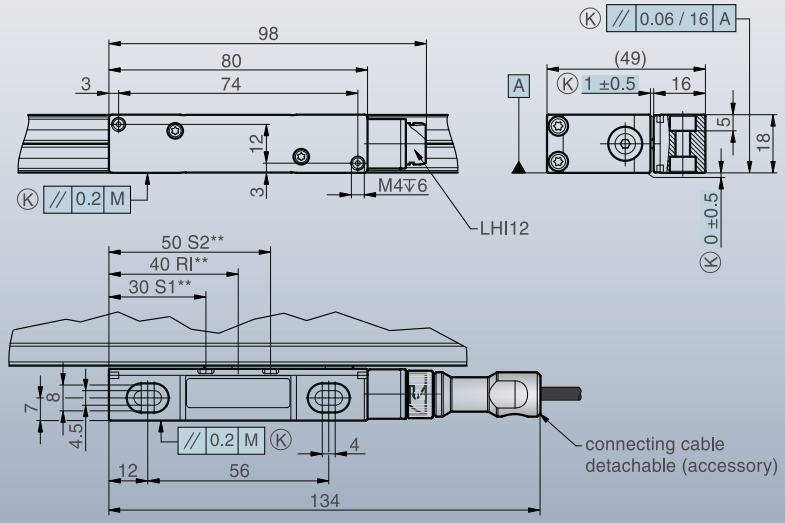

M	=	machine guideway
ML	=	measuring length
G	=	gauging points
◁▷	=	0 ... ML
A	=	cable
LHI12	=	male connector
Ⓚ	=	required mating dimensions

optional:

P	=	M5 air inlet
S1, S2	=	switch signals
RI	=	selectable reference mark
*	=	actuator magnet
**	=	sensor position

MSA 720, MSA 820

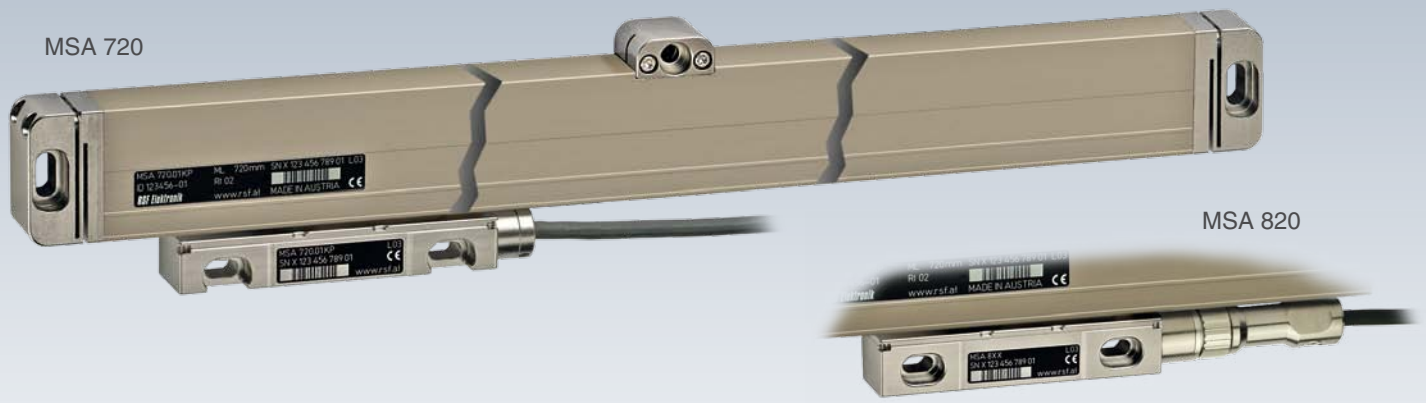

Dimensions, mounting tolerances MSA 720:

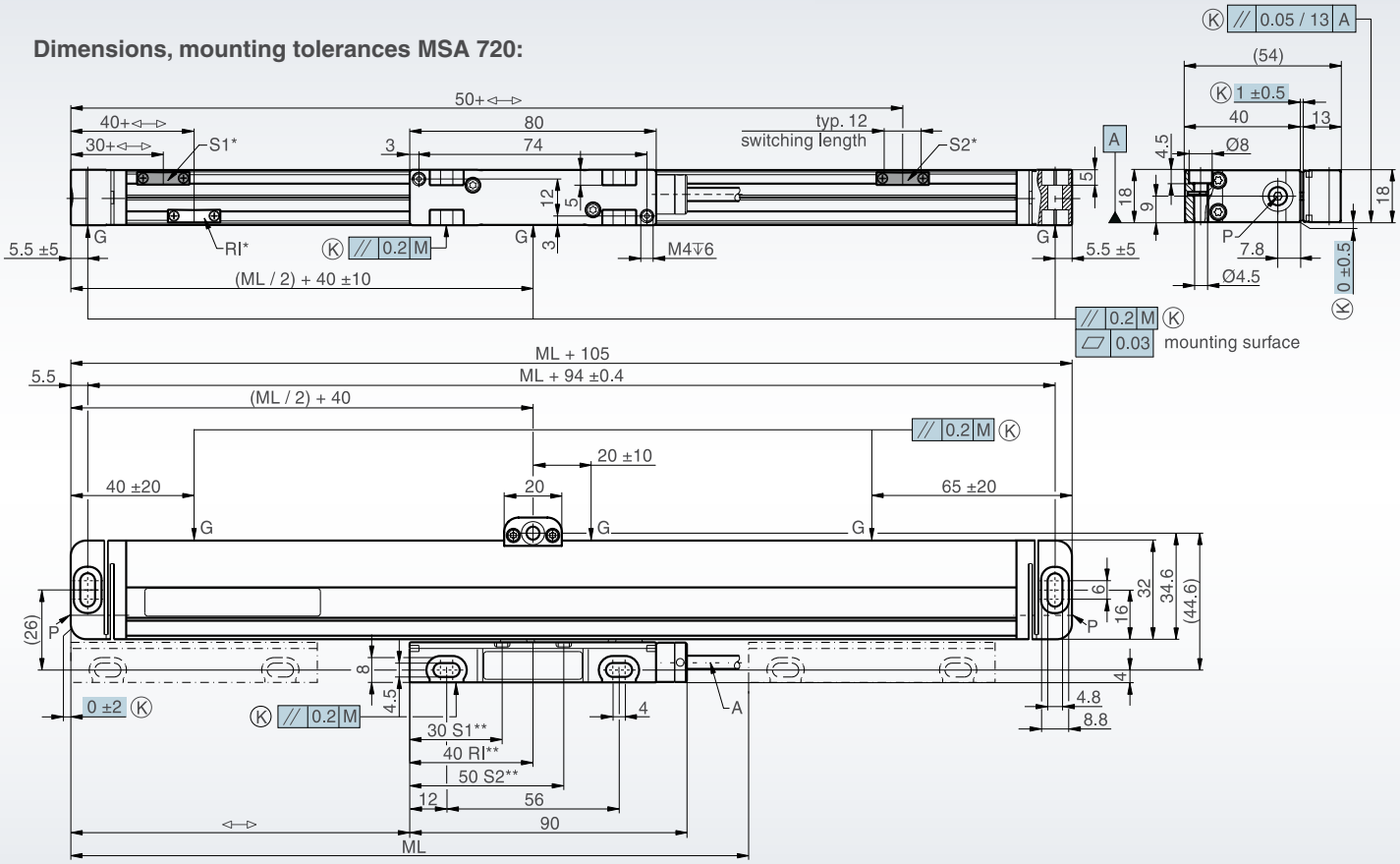

Dimensions, mounting tolerances MSA 820:

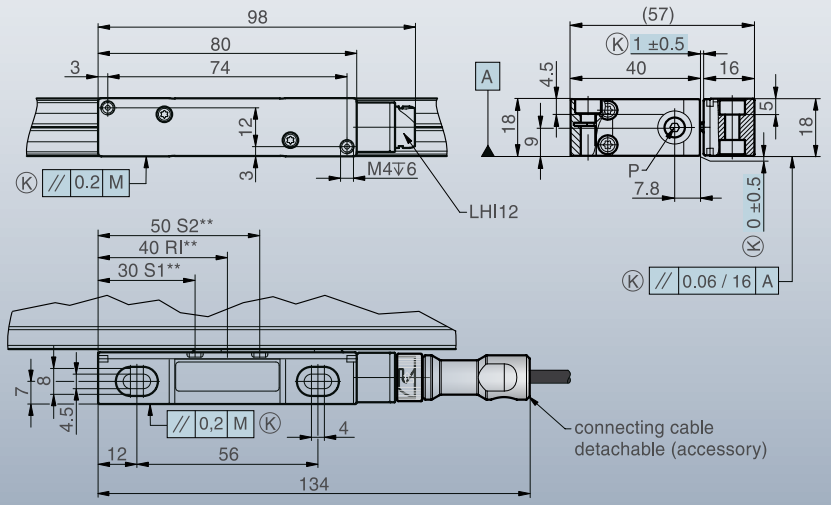

M	=	machine guideway
ML	=	measuring length
G	=	gauging points
◁—▷	=	0 ... ML
A	=	cable
LHI12	=	male connector
Ⓚ	=	required mating dimensions

optional:

P	=	M5 air inlet
S1, S2	=	switch signals
RI	=	selectable reference mark
*	=	actuator magnet
**	=	sensor position

MSA 730, MSA 830

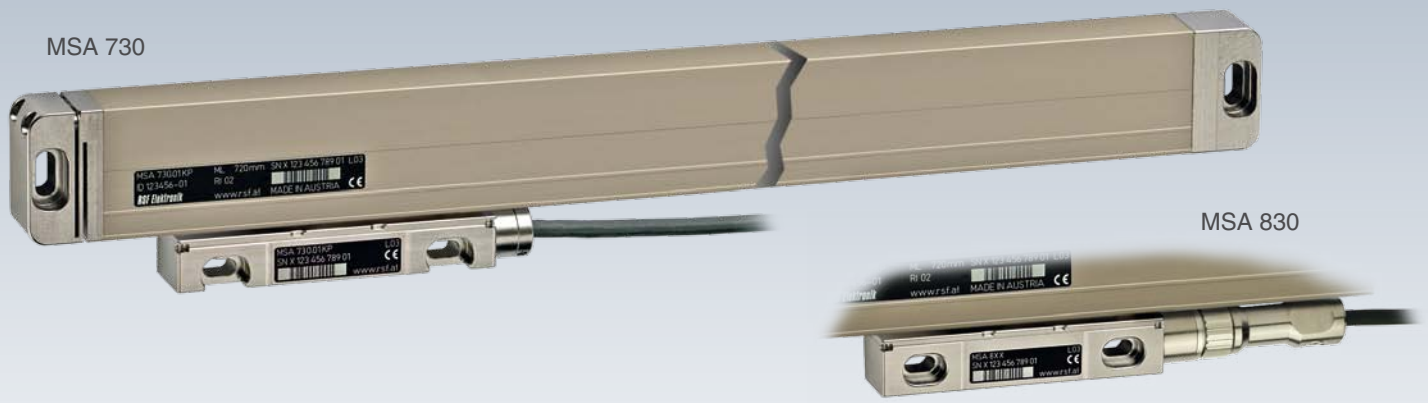

Dimensions, mounting tolerances MSA 730:

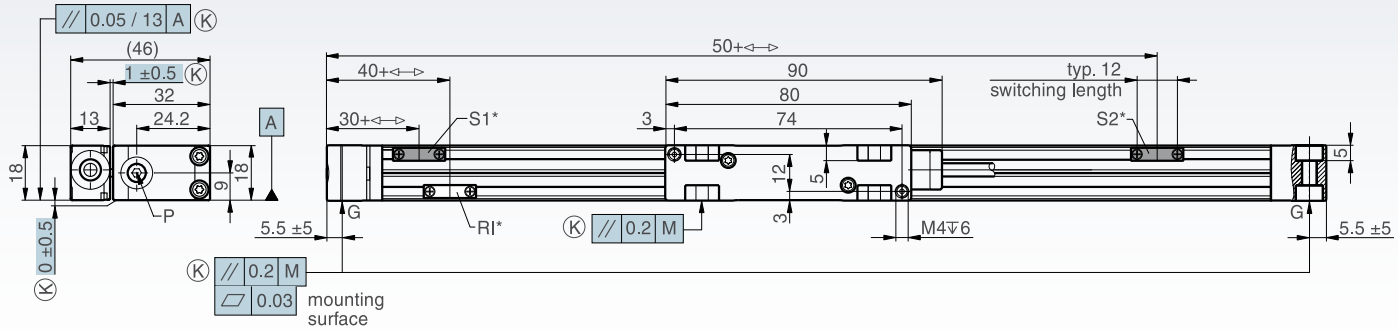

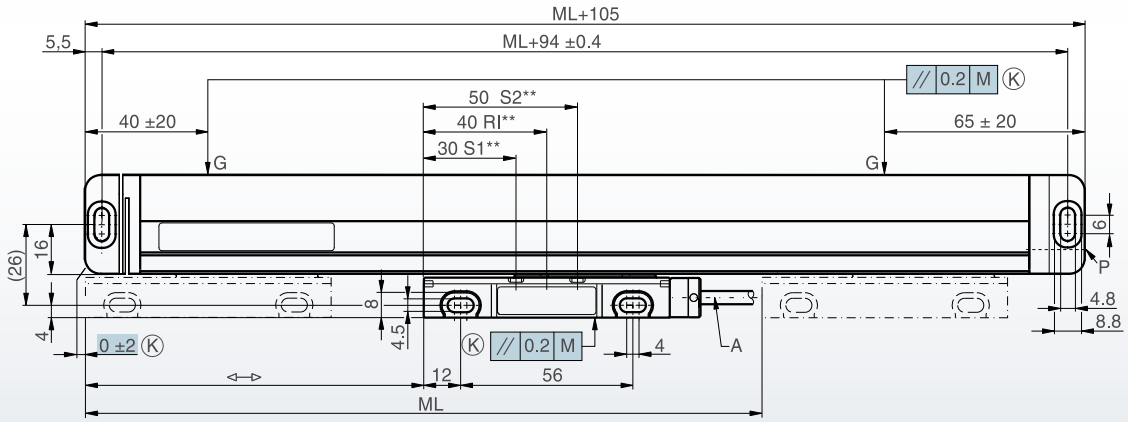

Dimensions, mounting tolerances MSA 830:

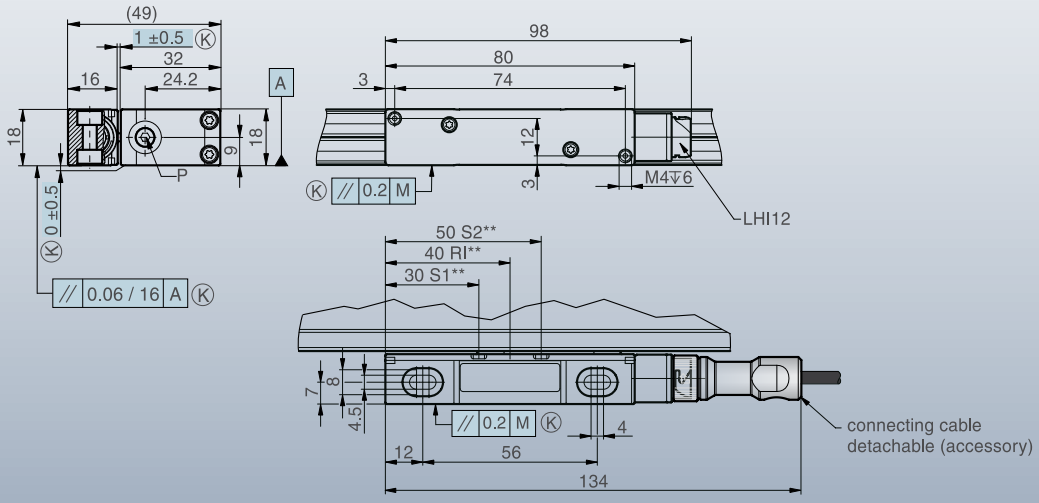

M	=	machine guideway
ML	=	measuring length
G	=	gauging points
◁▷	=	0 ... ML
A	=	cable
LHI12	=	male connector
K	=	required mating dimensions

optional:

P	=	M5 air inlet
S1, S2	=	switch signals
RI	=	selectable reference mark
*	=	actuator magnet
**	=	sensor position

MSA 771, MSA 871

MSA 771

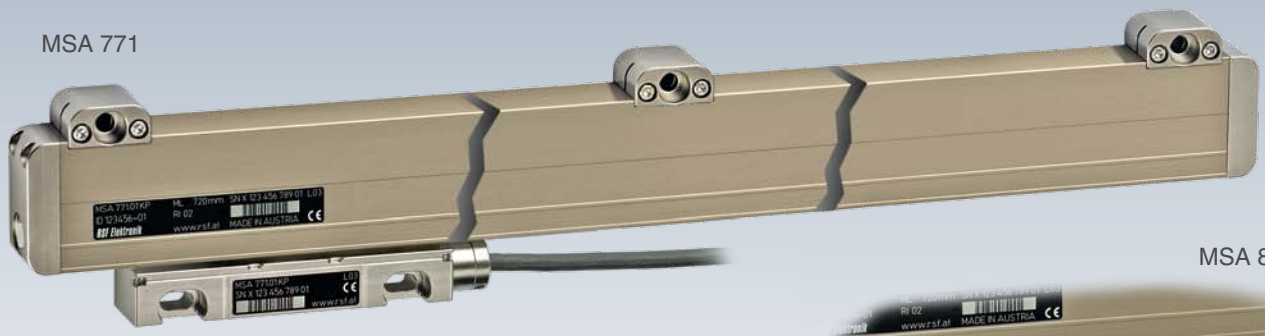

MSA 871

Dimensions, mounting tolerances MSA 771:

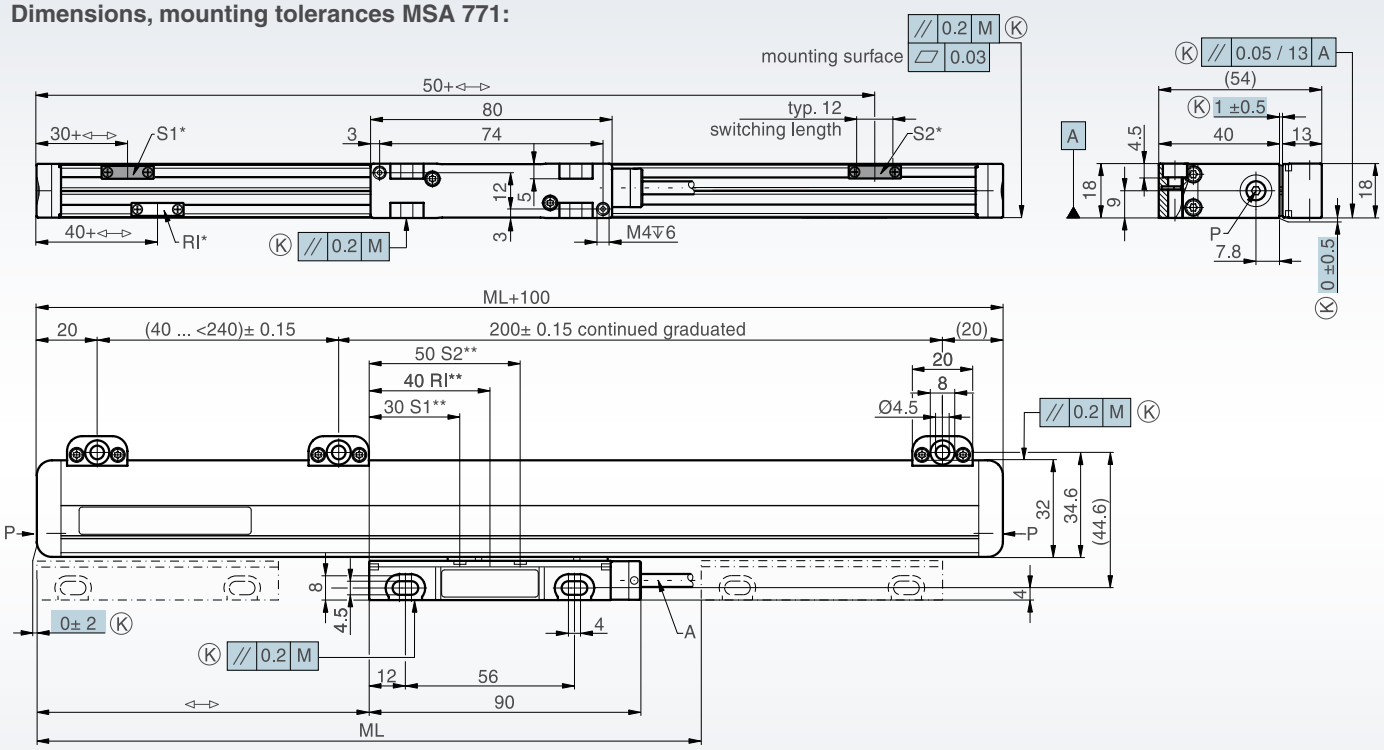

Dimensions, mounting tolerances MSA 871:

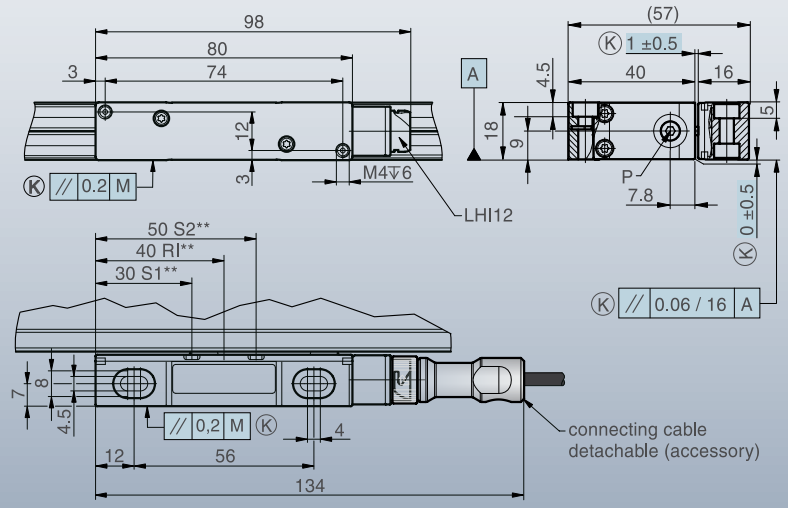

M	=	machine guideway
ML	=	measuring length
◁▷	=	0 ... ML
A	=	cable
LHI12	=	male connector
K	=	required mating dimensions

optional:

P	=	M5 air inlet
S1, S2	=	switch signals
RI	=	selectable reference mark
*	=	actuator magnet
**	=	sensor position

MSA 711, MSA 811

MSA 711

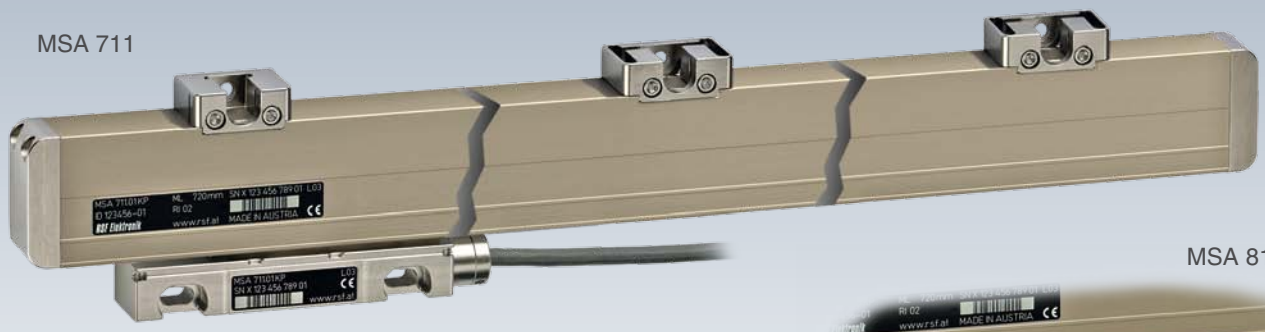

MSA 811

Dimensions, mounting tolerances MSA 711:

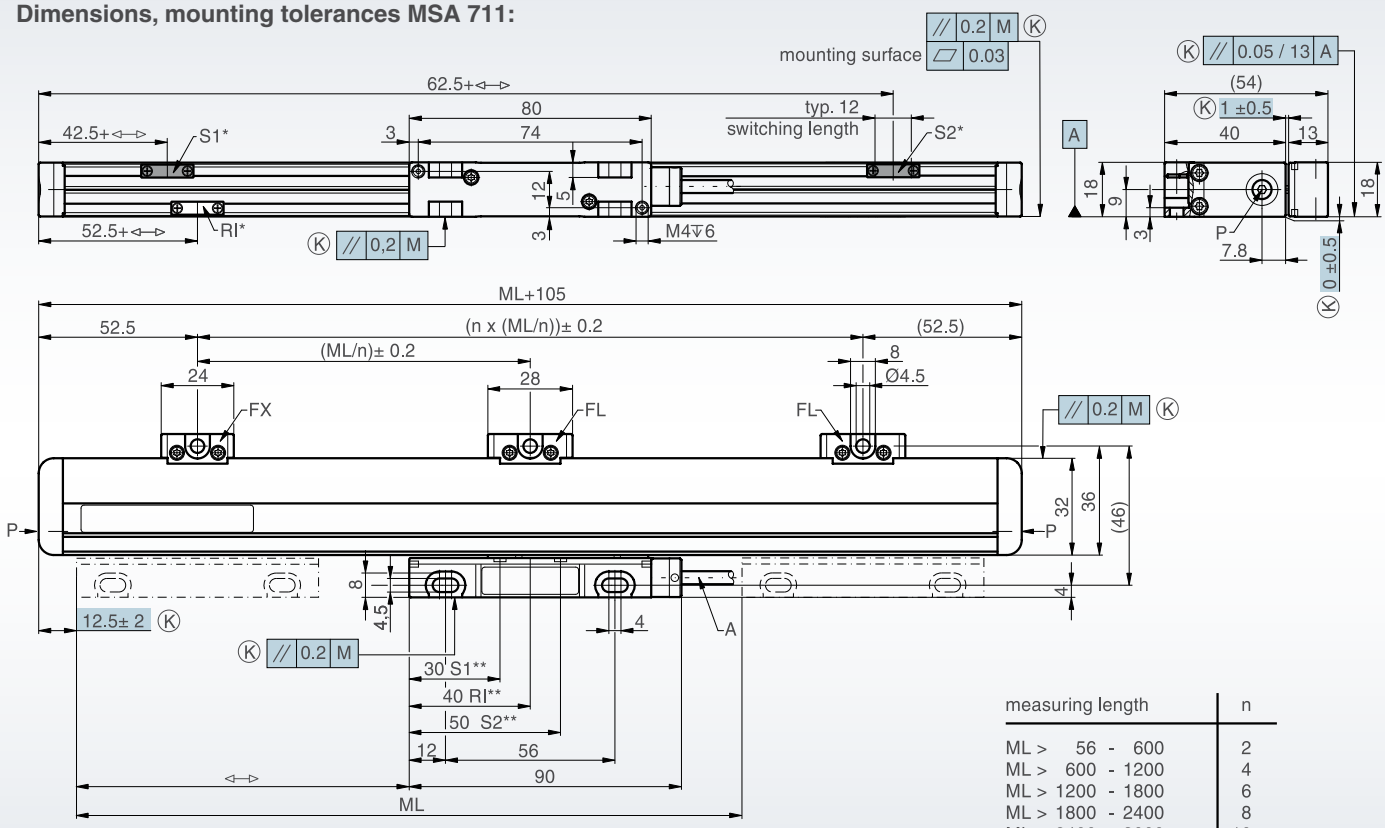

measuring length	n
ML > 56 - 600	2
ML > 600 - 1200	4
ML > 1200 - 1800	6
ML > 1800 - 2400	8
ML > 2400 - 3000	10
ML > 3000 - 3040	12

Dimensions, mounting tolerances MSA 811:

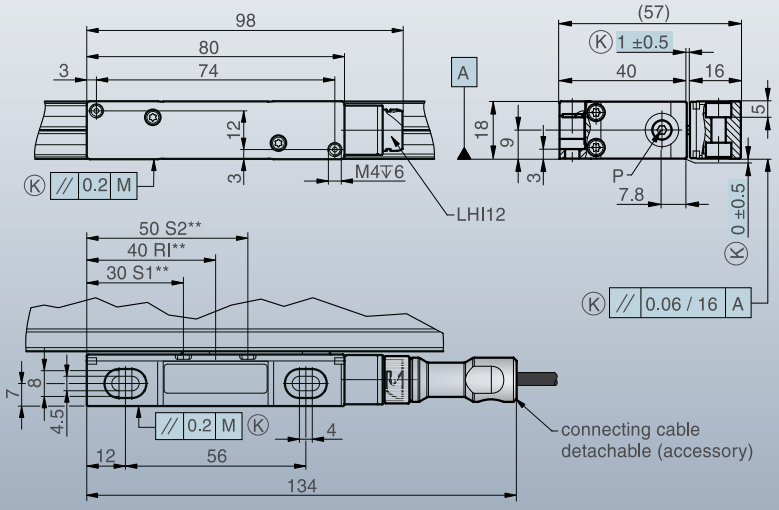

M = machine guideway
ML = measuring length
◁▷ = 0 ... ML
A = cable

LHI12 = male connector

Ⓚ = customer mounting dimensions

FX = fixed mounting
FL = flexible mounting

optional:
P = M5 air inlet
S1, S2 = switch signals
RI = selectable reference mark
* = actuator magnet
** = sensor position

MSA 721, MSA 821

MSA 721

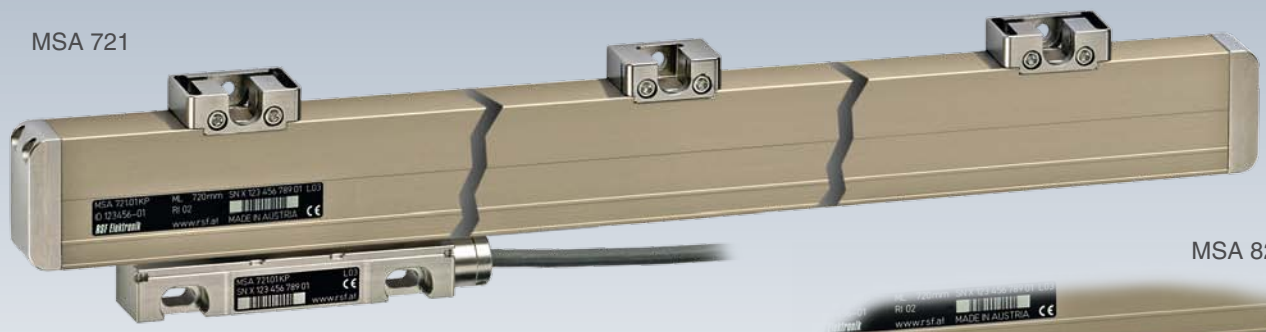

MSA 821

Dimensions, mounting tolerances MSA 721:

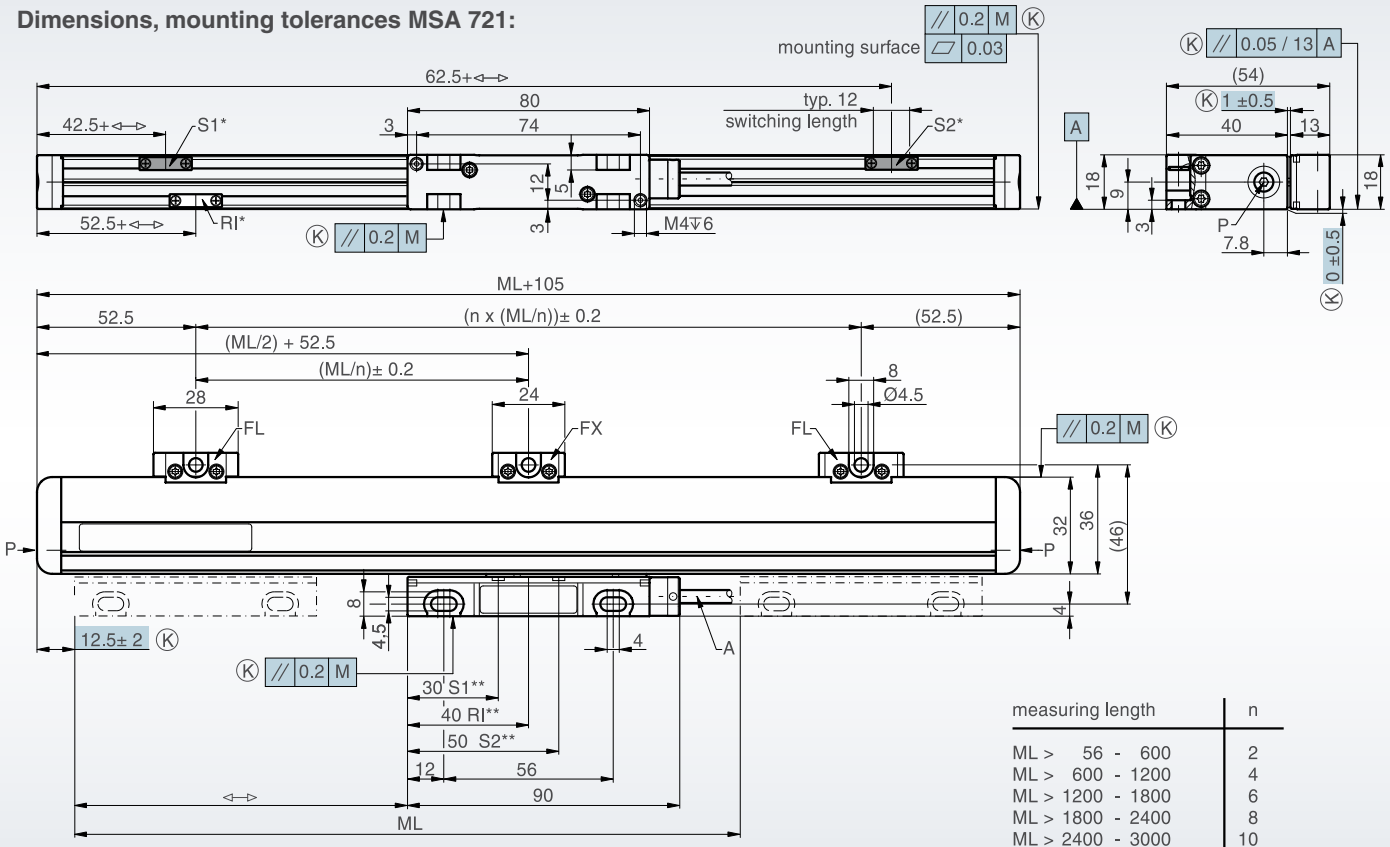

measuring length	n
ML > 56 - 600	2
ML > 600 - 1200	4
ML > 1200 - 1800	6
ML > 1800 - 2400	8
ML > 2400 - 3000	10
ML > 3000 - 3040	12

Dimensions, mounting tolerances MSA 821:

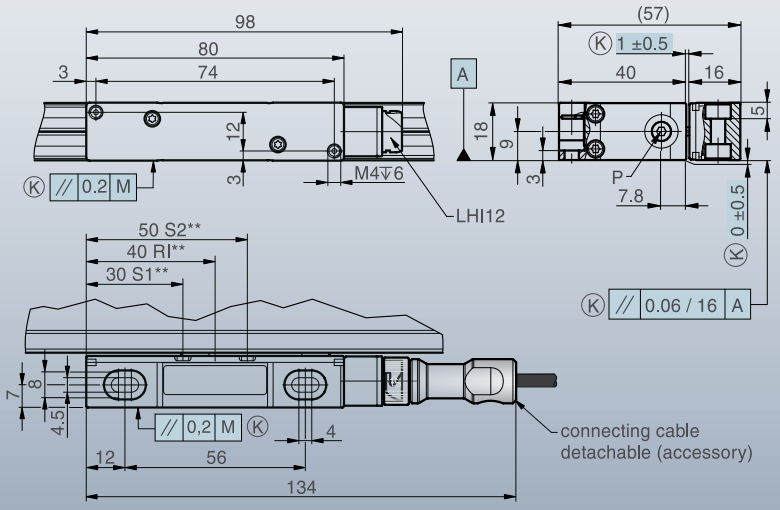

M	=	machine guideway
ML	=	measuring length
⊲⊳	=	0 ... ML
A	=	cable
LHI12	=	male connector
K	=	customer mounting dimensions
FX	=	fixed mounting
FL	=	flexible mounting

optional:

P	=	M5 air inlet
S1, S2	=	switch signals
RI	=	selectable reference mark
*	=	actuator magnet
**	=	sensor position

MSA 731, MSA 831

MSA 731

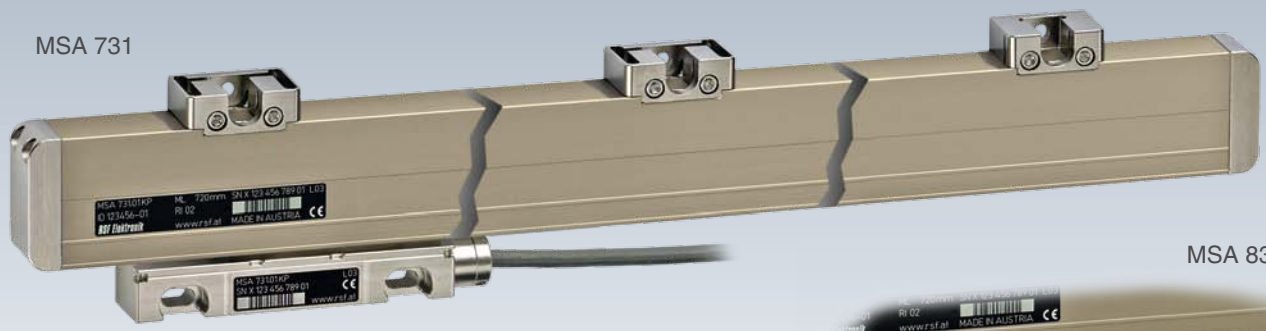

MSA 831

Dimensions, mounting tolerances MSA 731:

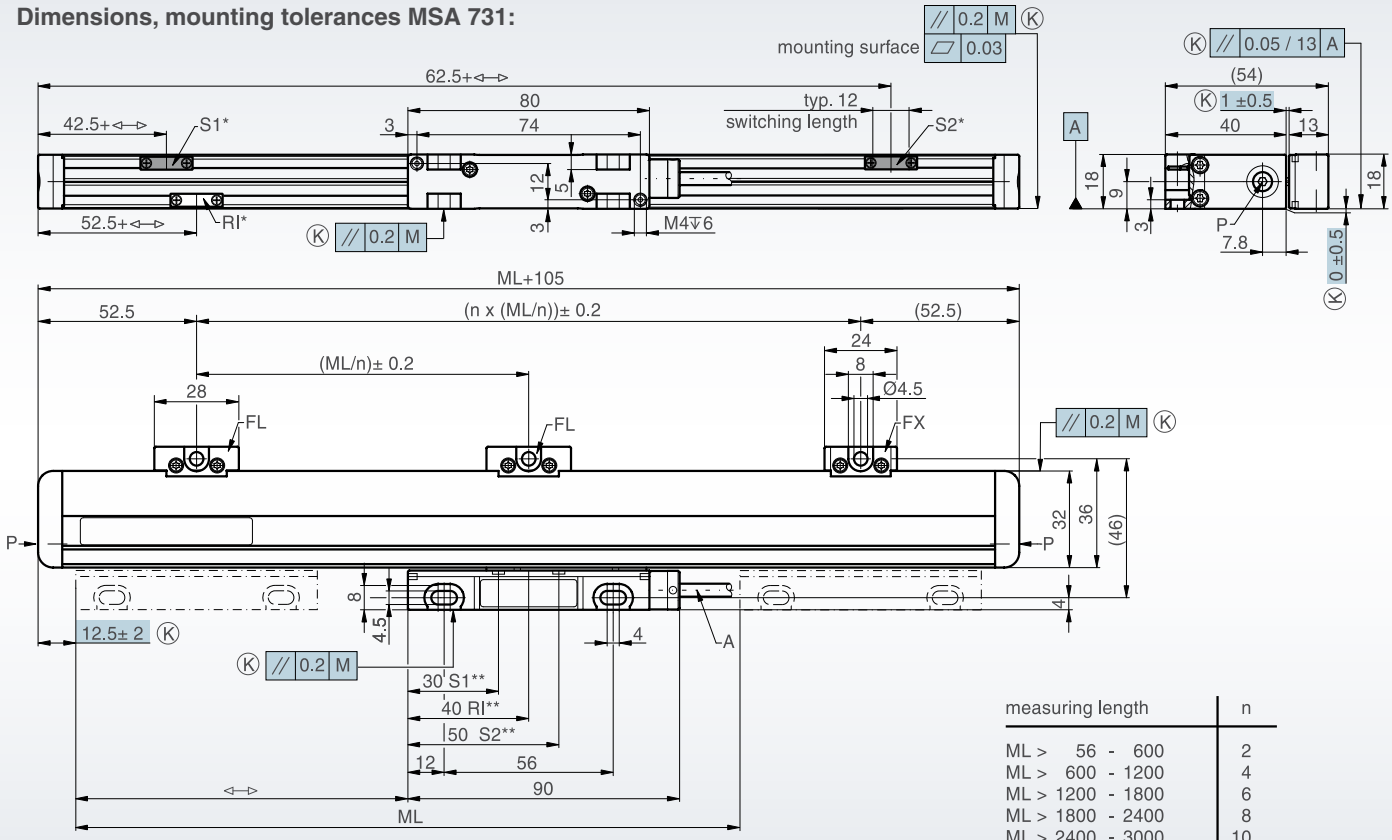

measuring length	n
ML > 56 - 600	2
ML > 600 - 1200	4
ML > 1200 - 1800	6
ML > 1800 - 2400	8
ML > 2400 - 3000	10
ML > 3000 - 3040	12

Dimensions, mounting tolerances MSA 831:

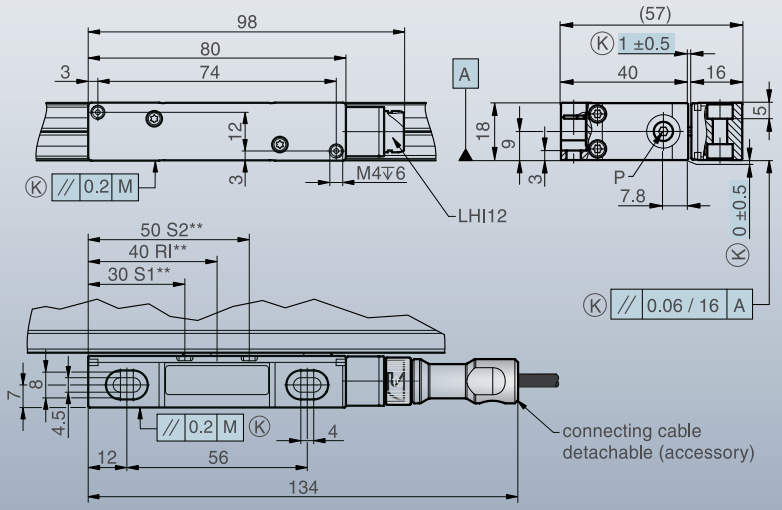

M	=	machine guideway
ML	=	measuring length
⊲⊳	=	0 ... ML
A	=	cable
LHI12	=	male connector
K	=	customer mounting dimensions
FX	=	fixed mounting
FL	=	flexible mounting

optional:

P	=	M5 air inlet
S1, S2	=	switch signals
RI	=	selectable reference mark
*	=	actuator magnet
**	=	sensor position

MSA 470, MSA 570

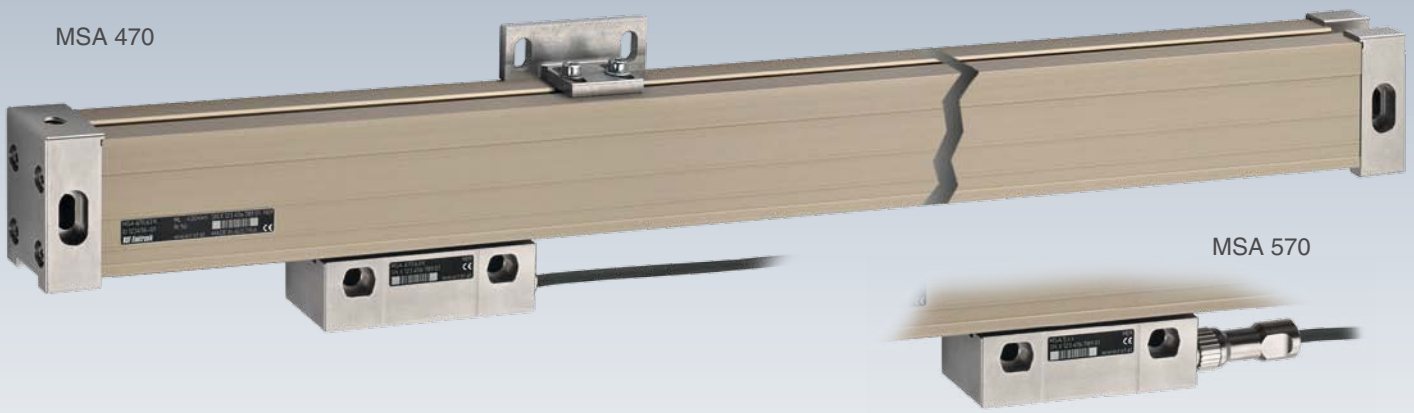

Dimensions, mounting tolerances MSA 470:

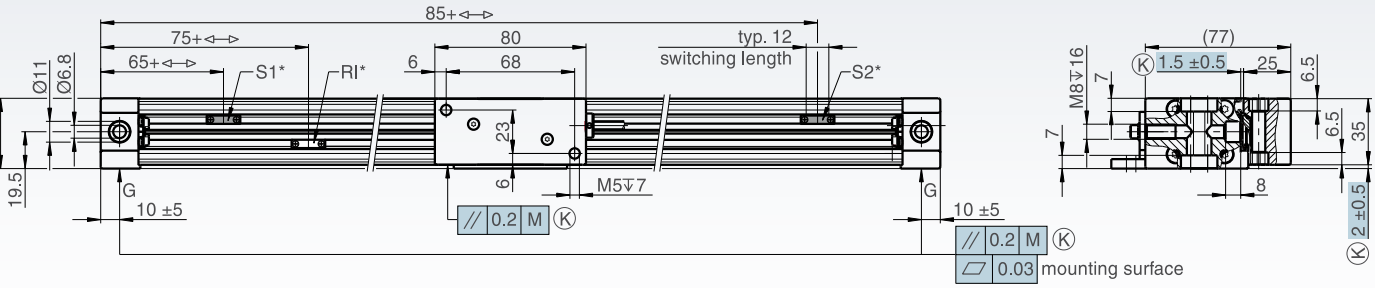

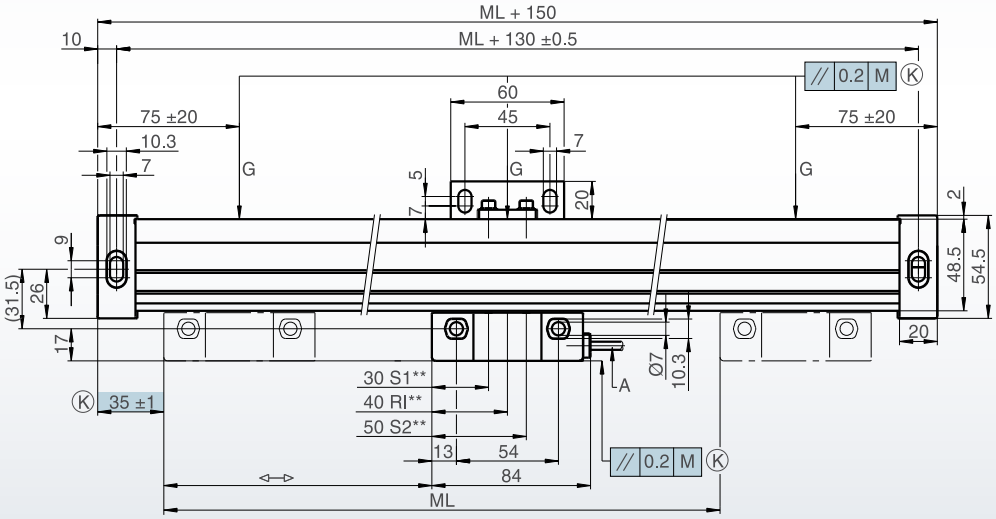

quantity and position of the mounting support per measuring length

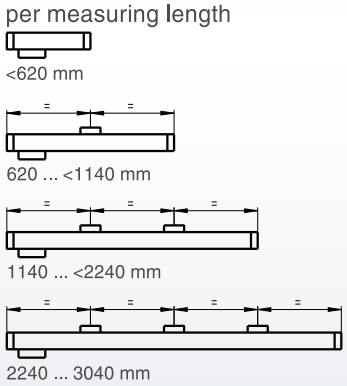

M	=	machine guideway
ML	=	measuring length
G	=	gauging points
⇔	=	0 ... ML
A	=	cable
Ⓚ	=	required mating dimensions

optional:

P	=	air inlet M5
S1, S2	=	switch signals
RI	=	selectable reference mark
*		actuator magnet
**	=	sensor position

option P: air inlet scale
left or right side mountable

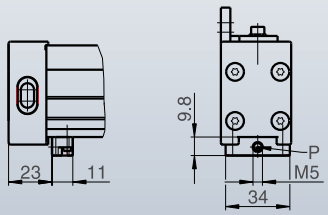

accessory: air inlet reading head
(ID 1079056-01)

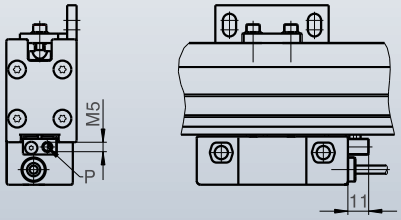

Dimensions MSA 570:

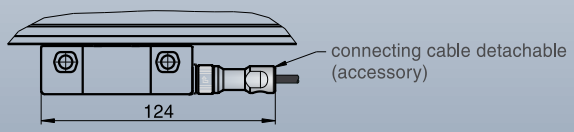

MSA 471, MSA 571

MSA 471

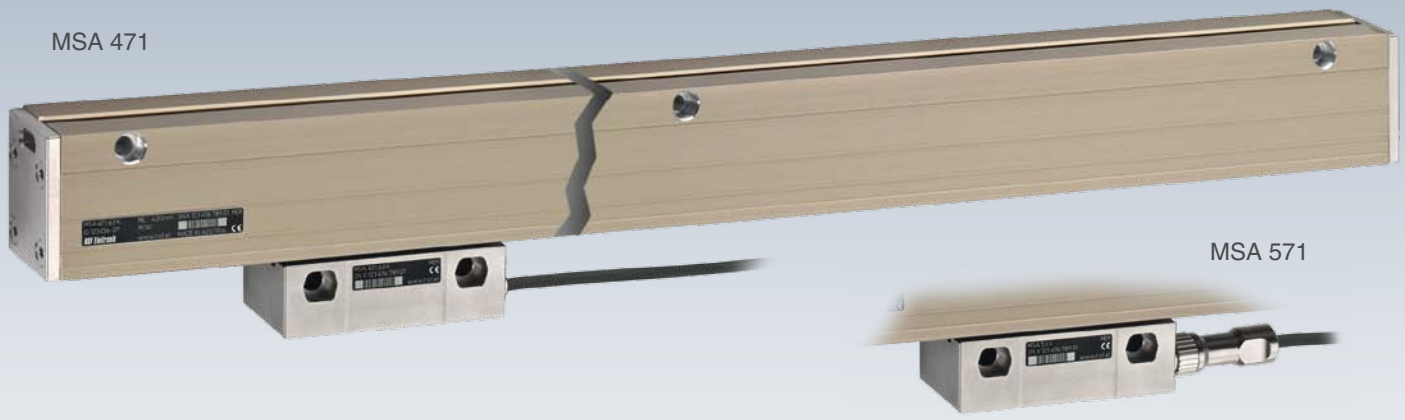

MSA 571

Dimensions, mounting tolerances MSA 571:

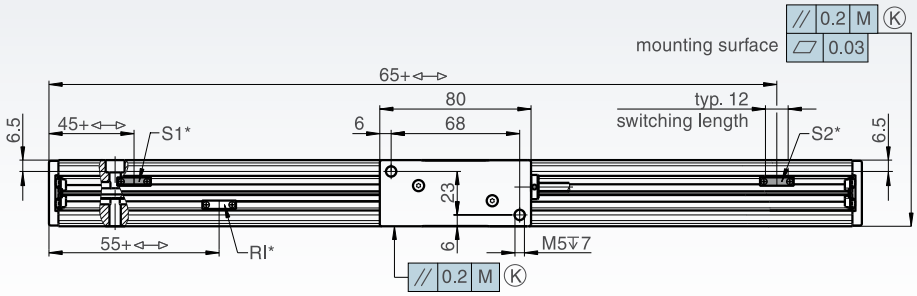

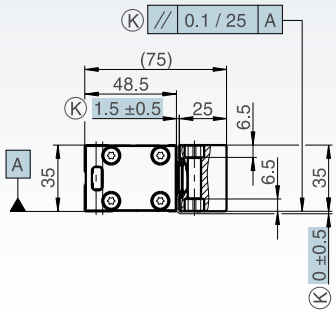

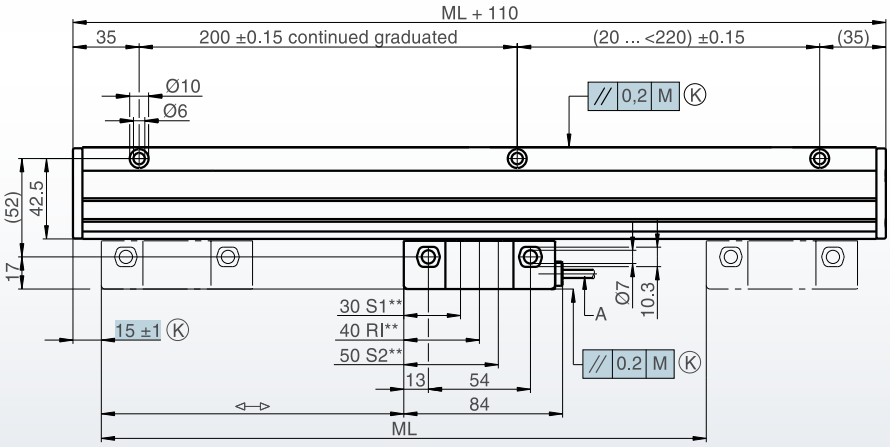

M = machine guideway
ML = measuring length
◁▷ = 0 ... ML
A = cable

K = required mating dimensions

optional:
P = air inlet M5
S1, S2 = switch signals
RI = selectable reference mark
* = actuator magnet
** = sensor position

option P: air inlet scale
left or right side mountable

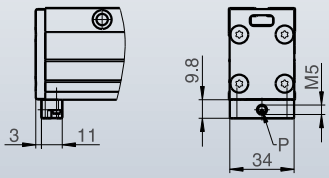

accessory: air inlet reading head
(ID 1079056-01)

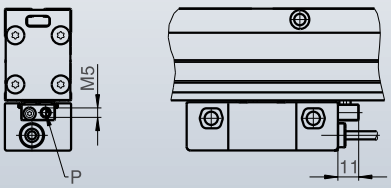

Dimensions MSA 571:

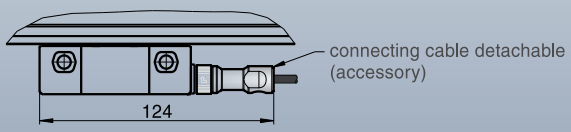

MSA 411, MSA 511

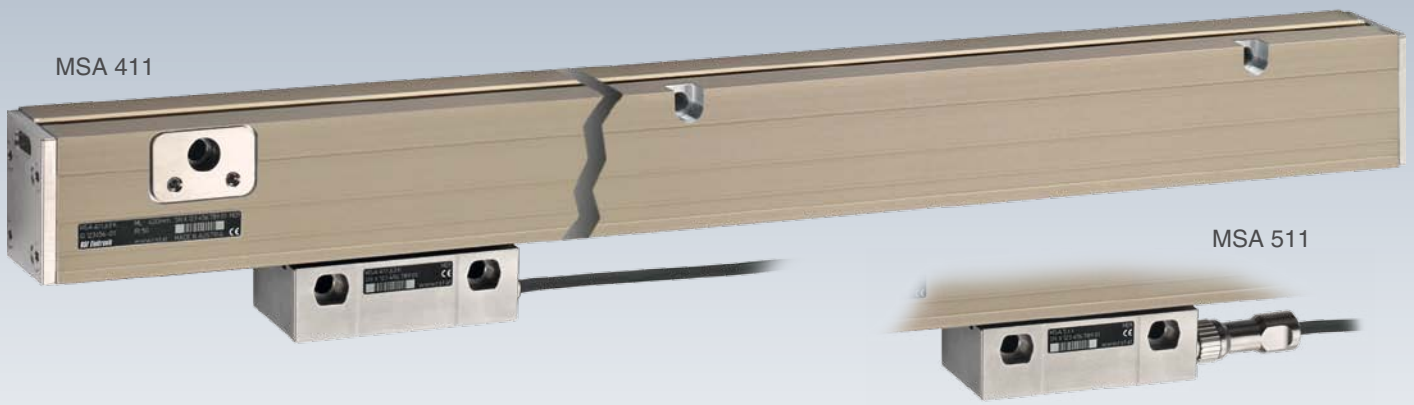

Dimensions, mounting tolerances MSA 411:

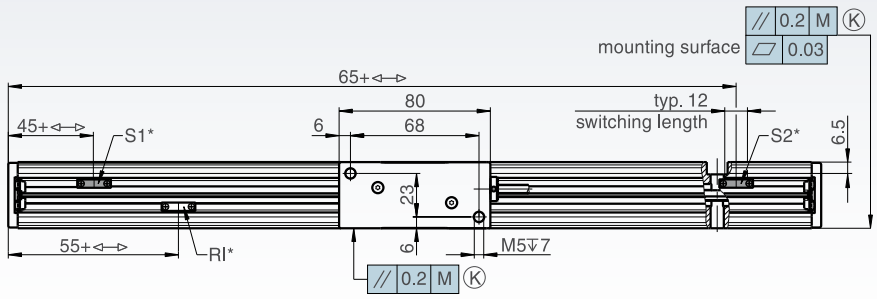

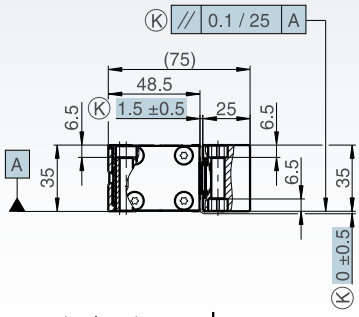

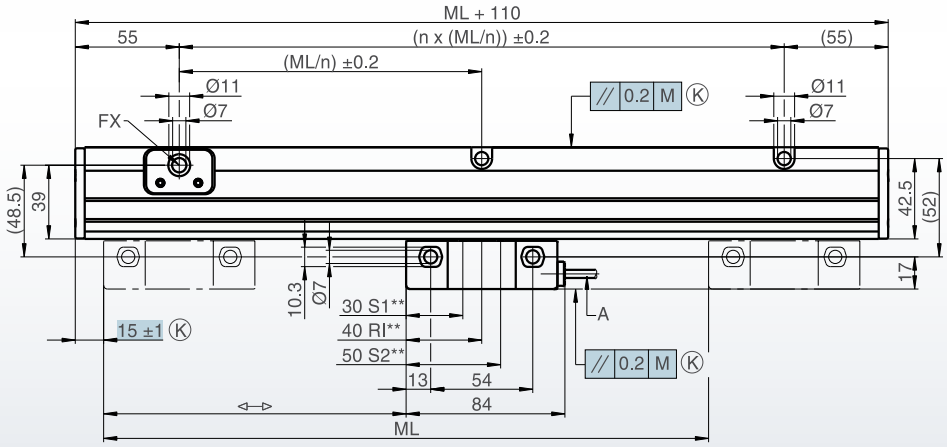

measuring length	n
ML > 56 - 600	2
ML > 600 - 1200	4
ML > 1200 - 1800	6
ML > 1800 - 2400	8
ML > 2400 - 3000	10
ML > 3000 - 3040	12

M = machine guideway
ML = measuring length
⟷ = 0 ... ML
A = cable

K = required mating dimensions

FX = fixed-point

optional:
P = air inlet M5
S1, S2 = switch signals
RI = selectable reference mark
* = actuator magnet
** = sensor position

option P: air inlet scale
left or right side mountable

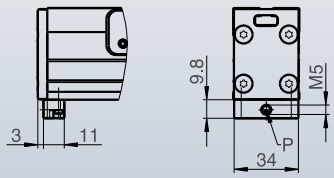

accessory: air inlet reading head
(ID 1079056-01)

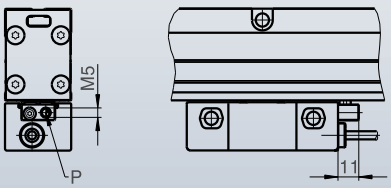

Dimensions MSA 511:

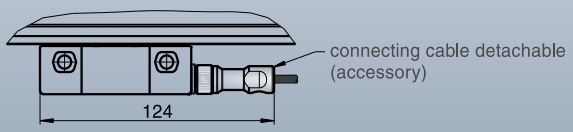

MSA 421, MSA 521

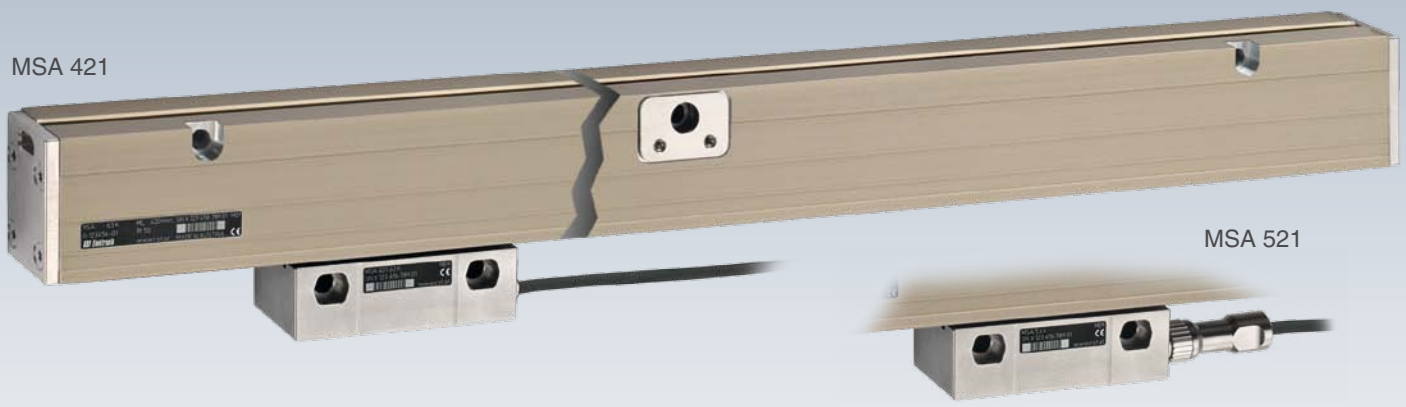

Dimensions, mounting tolerances MSA 421:

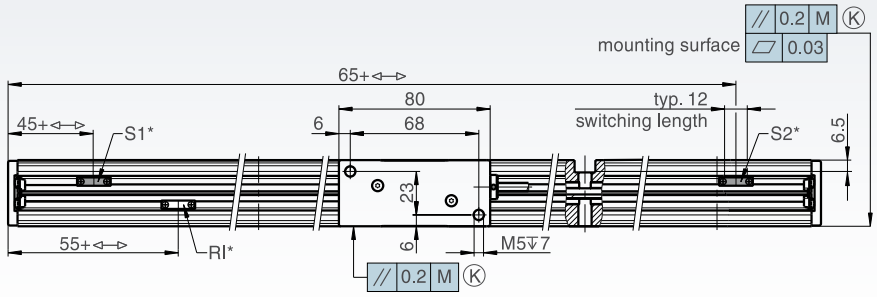

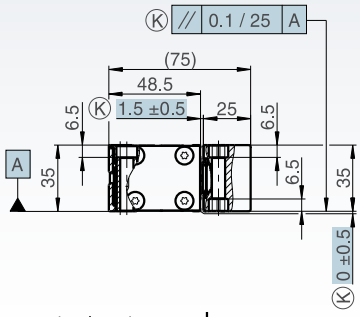

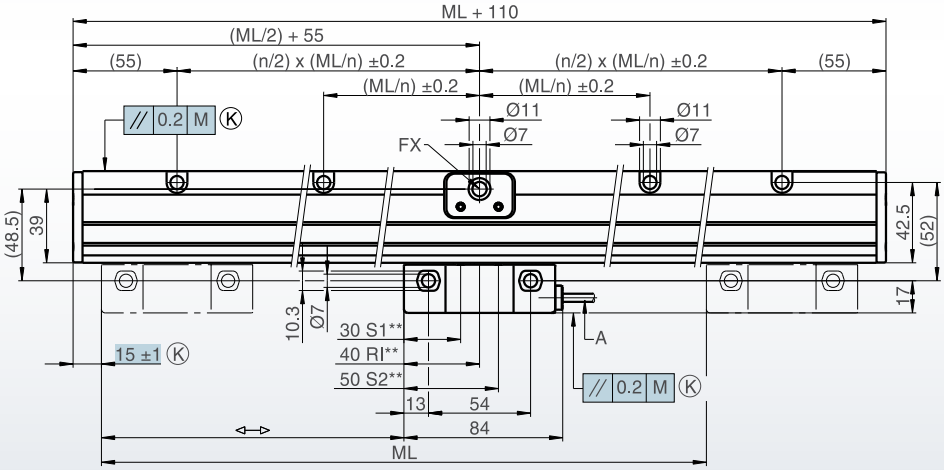

measuring length	n
ML > 56 - 600	2
ML > 600 - 1200	4
ML > 1200 - 1800	6
ML > 1800 - 2400	8
ML > 2400 - 3000	10
ML > 3000 - 3040	12

M = machine guideway
ML = measuring length
⇹ = 0 ... ML
A = cable

K = required mating dimensions

FX = fixed-point

optional:
P = air inlet M5
S1, S2 = switch signals
RI = selectable reference mark
* = actuator magnet
** = sensor position

option P: air inlet scale
left or right side mountable

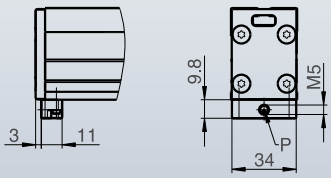

accessory: air inlet reading head
(ID 1079056-01)

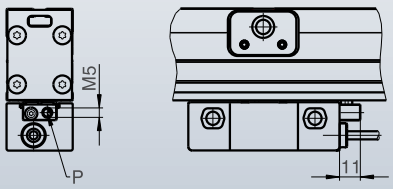

Dimensions MSA 521:

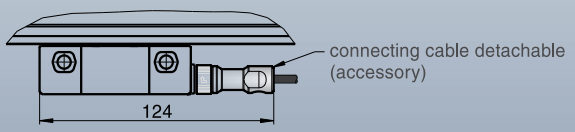

MSA 431, MSA 531

Dimensions, mounting tolerances MSA 431:

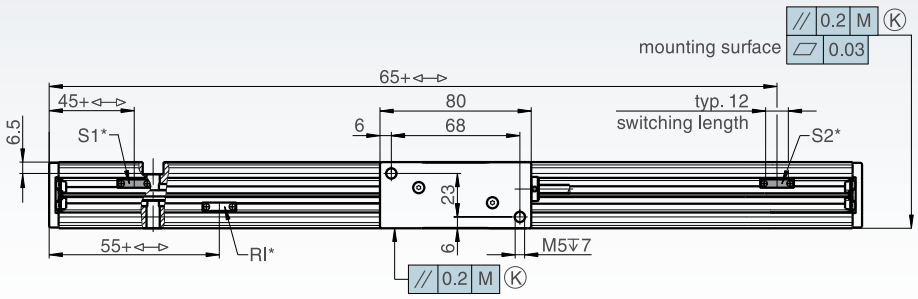

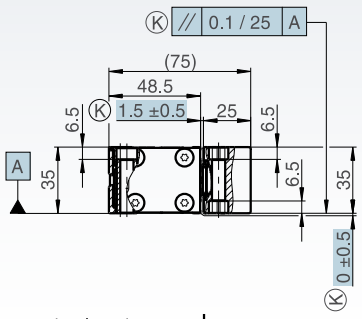

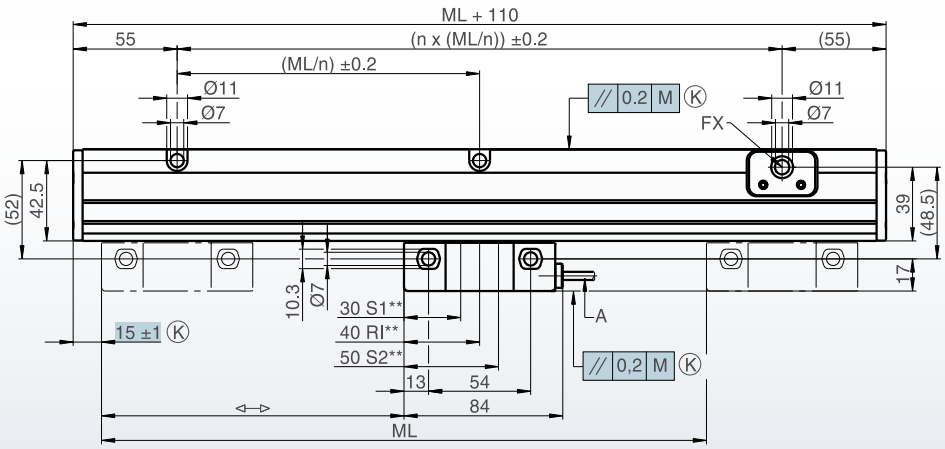

measuring length	n
ML > 56 - 600	2
ML > 600 - 1200	4
ML > 1200 - 1800	6
ML > 1800 - 2400	8
ML > 2400 - 3000	10
ML > 3000 - 3040	12

M = machine guideway
ML = measuring length
⊲⊳ = 0 ... ML
A = cable

K = required mating dimensions

FX = fixed-point

optional:
P = air inlet M5
S1, S2 = switch signals
RI = selectable reference mark
* = actuator magnet
** = sensor position

option P: air inlet scale
left or right side mountable

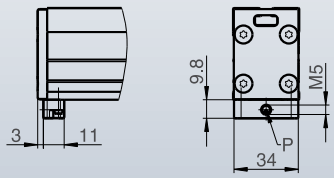

accessory: air inlet reading head
(ID 1079056-01)

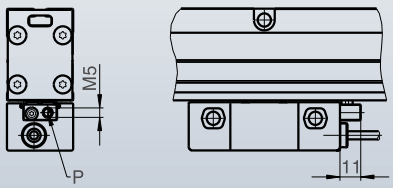

Dimensions MSA 531:

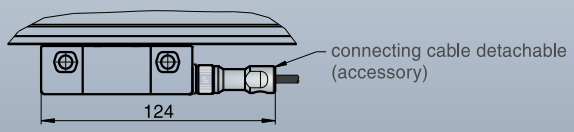

MSA 170

Scale model electronic version	Output signals	System resolution [µm/m]	Accuracy grades [µm/m]	Grating pitch [µm]	Integrated interpolation	Max. velocity [m/s]	Max. output frequency [kHz]
MSA 170.03	∼ 1 Vpp	dep. on external interpolation	±3, ±5	20	--	1.0	50
							Edge separation a_{min}
MSA 170.23	⎍	5.0	±3, ±5	20	times 1	1.0	3.3 µs
MSA 170.63	⎍	1.0	±3, ±5	20	times 5	1.0	500 ns
MSA 170.73	⎍	0.5	±3, ±5	20	times 10	1.0	300 ns
MSA 170.53	⎍	0.2	±3, ±5	20	times 25	0.64	300 ns
MSA 170.83	⎍	0.1	±3, ±5	20	times 50	0.32	300 ns

Standard measuring lengths (**ML**): [mm]
50, 70, 120, 170, 220, 270, 320, 370, 420, 470, 520

Scale unit: Glass scale ($\alpha \approx 8.5 \times 10^{-6}$/K)

Location of reference mark (**RI**):
- Distance-coded reference mark (**K**)
  after travelling max. 20 mm the absolute position is available
- One reference mark in the middle of measuring length, or 10 mm from either end of measuring length (excluding ML 50 mm)
- Optional: one reference mark at any location, additional reference marks can be selected by distances of n x 25 mm

Required moving force: <1 N

Environmental sealing acc. EN 60529: IP 53
- With DA 400: IP 64 (see page 33)

Permissible vibration: 100 m/s² (40 to 2000 Hz)

Permissible shock: 150 m/s² (8 ms)

Permissible temperature:
–20 °C to +70 °C (storage), 0 °C to +50 °C (operation)

Weight (approx.):
20 g+0.17 g/mm (ML)+35 g (reading head without cable)

Power supply: +5 V ±5%
max. 75 mA (unloaded) ∼ 1 Vpp, max. 120 mA (unloaded) ⎍

RoHS-conformity:
The Linear Encoders of the MSA 170 series comply with the guideline of the RoHS- directive 2011/65/EU on the restriction of the use of certain hazardous substances in electrical and electronic equipment

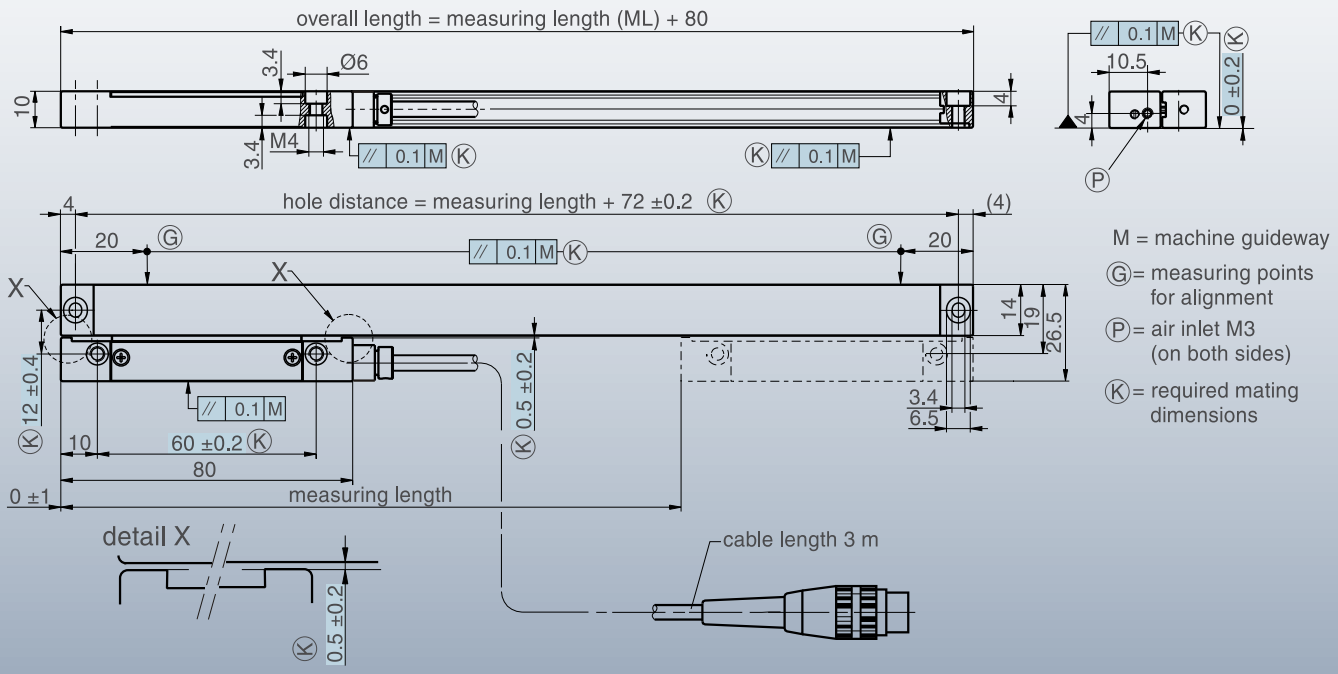

MSA 373, MSA 374, MSA 375

MSA 373

Scale model electronic version	Output signals	System resolution [µm/m]	Accuracy grades [µm/m]	Grating pitch [µm]	Integrated interpolation	Max. velocity [m/s]	Max. output frequency [kHz]
MSA 37x.65	⎍	5 µm	±10	100	times 5	1,0	1.6 µs
MSA 37x.55	⎍	1 µm	±10	100	times 25	1,0	800 ns

Standard measuring lengths (ML): [mm]
70, 120, 170, 220, 270, 320, 370, 420, 470, 520, 620, 720, 770, 820, 920, 1040, 1140, 1240 (other ML on request)

Scale unit: Glass scale ($\alpha \approx 8.5 \times 10^{-6}$/K)

Free positionable actuator magnets for special functions:
The position of the two switch-points (S1 und S2) can be selected by the customer within measuring length.

Location of reference mark (RI):
- One reference mark in the middle of measuring length, or 35 mm from either end of measruring length
- Optional: one reference mark at any location, additional reference marks can be selected by distances of n x 50 mm

Required moving force: <1 N

Environmental sealing acc. EN 60529: IP 53
- With DA 400: IP 64 (see page 33)

Permissible vibration: 150 m/s² (40 to 2000 Hz)
Permissible shock: 300 m/s² (8 ms)

Permissible temperature:
–20 °C to +70 °C (storage), 0 °C to +50 °C (operation)

Weight (approx.):
250 g+1.34 g/mm (ML)+210 g (reading head without cable)

Power supply: +5 V ±5%, max. 120 mA (unloaded) ⎍

RoHS-conformity:
The Linear Encoders of the MSA 373, 374, 375 series comply with the guideline of the RoHS- directive 2011/65/EU on the restriction of the use of certain hazardous substances in electrical and electronic equipment.

ACCESSORY: CB8-150 COUPLING BAR (ONLY FOR MSA 373 AND MSA 375)

Axis distance: 150 mm (other axis distances on request)
Included in delivery: 2 hexagone socket screws M8 x 20 ISO 4762 for mounting

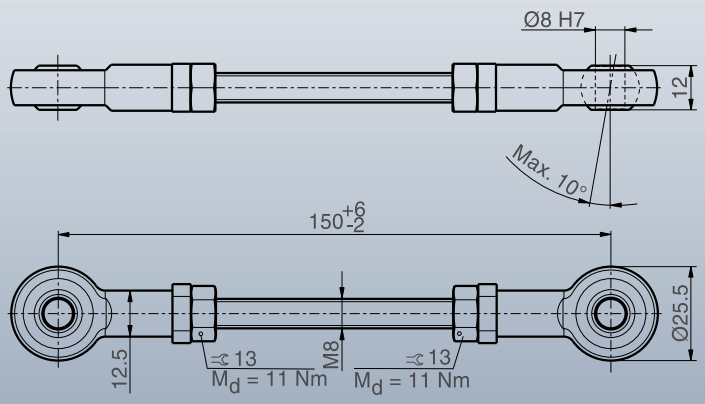

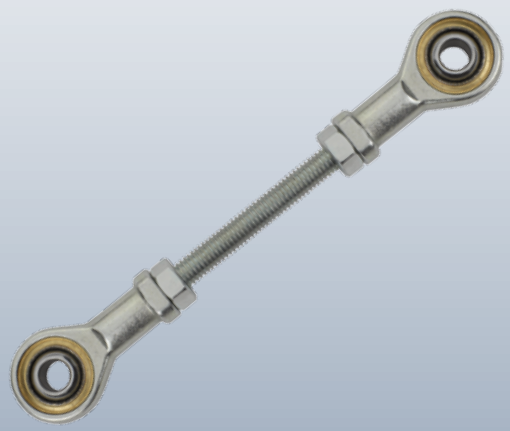

MSA 373

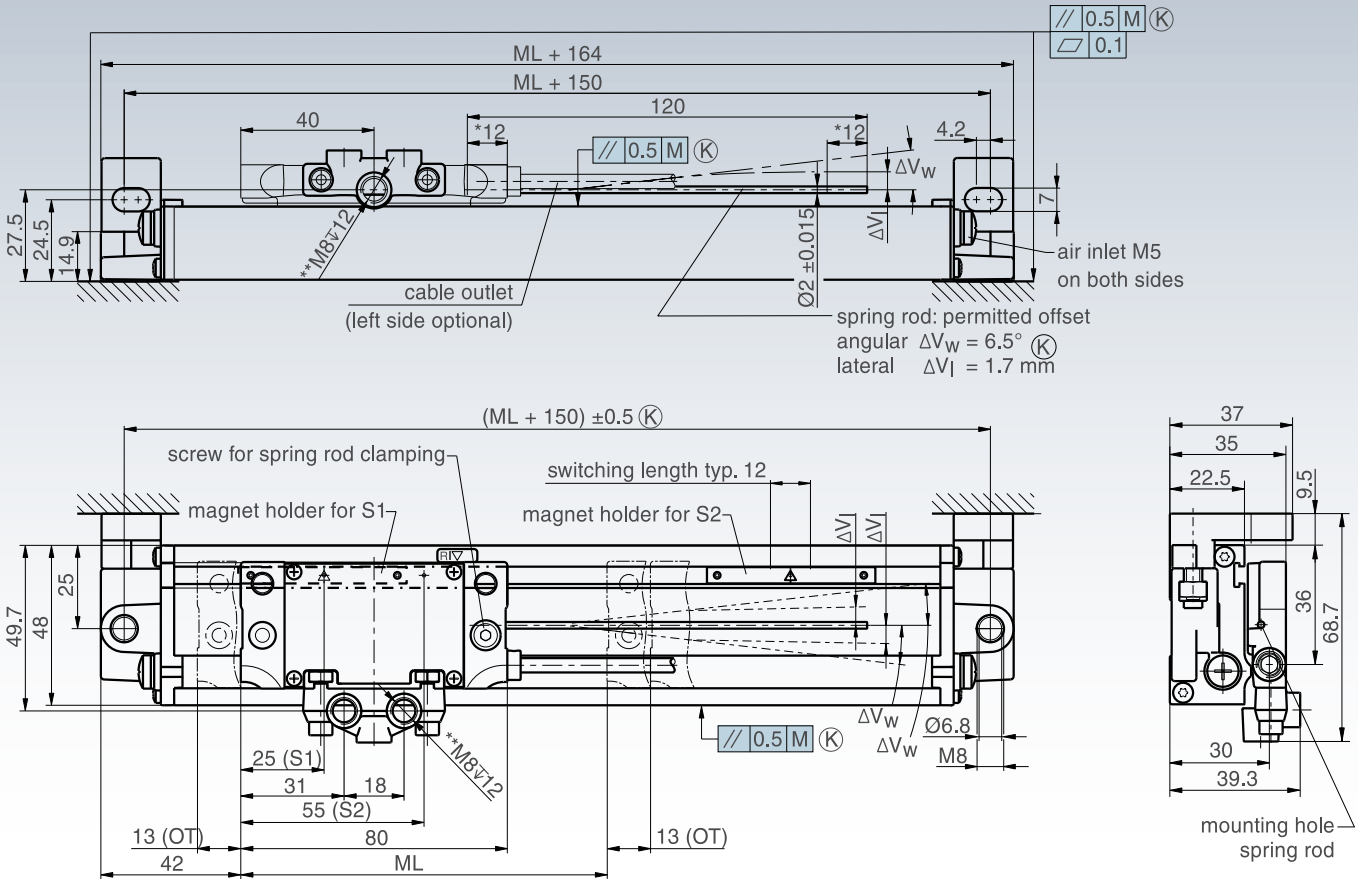

S1, S2 position of the sensors in the encoder head, switching length typ. 12 mm
switch positions S1 and S2 free selectable (allen wrench 0.9 mm)
spring rod clamping left side possible (allen wrench 3 mm)
* clamping length spring rod
** fastening screw thread for coupling bar

ML = measuring length
M = machine guideway
OT = overtravel
Ⓚ = required mating dimensions

MSA 374

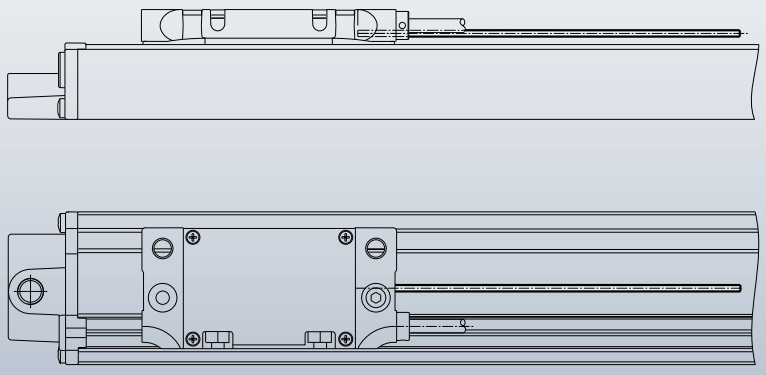

MSA 375

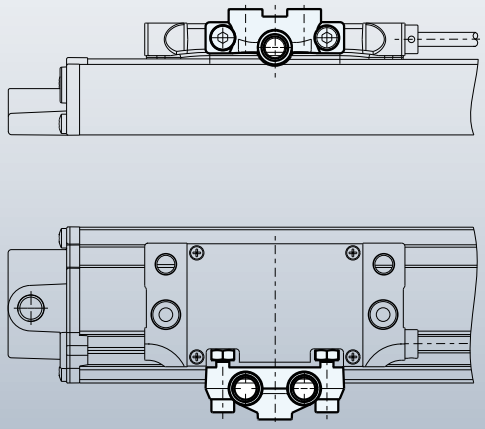

MALE AND FEMALE CONNECTORS, PIN ASSIGNMENTS

SUB MIN-D

Connector LD15 15-pin
(weight: 25 g)

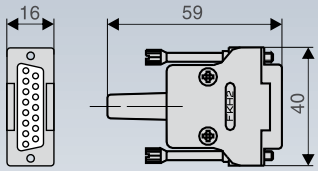

Pin assignment
(view on pins)

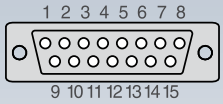

LD15

Pin	1	2	3	4	5	6	7	8	9	10	11	12	13	14	15
Sinusoidal voltage signals 1 Vpp	nc	0 V sensor	nc	$\overline{RI}$	$\overline{A2}$	$\overline{A1}$	+5 V sensor	+5 V	0 V	S1*	S2*	RI	A2	A1	shield
Square-wave signals via Line Driver	nc	0 V sensor	$\overline{US}$	$\overline{RI}$	$\overline{T2}$	$\overline{T1}$	+5 V sensor	+5 V	0 V	S1*	S2*	RI	T2	T1	shield

Sensor: The sensor-Pins are bridged in the chassis with the particular power supply
*Version without switch signals (version 0) = nc
Shield is additionally connected with the chassis

CONNEI

Connector L121 12-pin
(weight: 75 g)

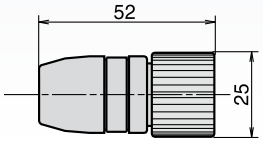

Pin assignment
male connector (view on pins)

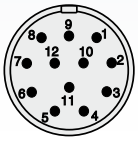

Female connector K121
12-pin

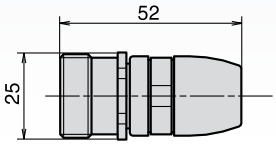

Female connector KM121
12-pin

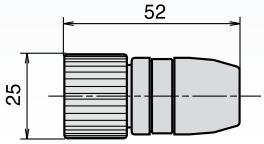

L121, K121, KM121

Pin	1	2	3	4	5	6	7	8	9	10	11	12
Sinusoidal voltage signals 1 Vpp	$\overline{A2}$	+5 V sensor	RI	$\overline{RI}$	A1	$\overline{A1}$	nc	A2	nc	0 V	0 V sensor	+5 V
Square-wave signals via Line Driver	$\overline{T2}$	+5 V sensor	RI	$\overline{RI}$	T1	$\overline{T1}$	$\overline{US}$	T2	nc	0 V	0 V sensor	+5 V

Sensor: The sensor-pins are bridged in the chassis with the particular power supply
Shield is additionally connected with the chassis

DIN

Connector L120 12-pin
(weight: 20 g)

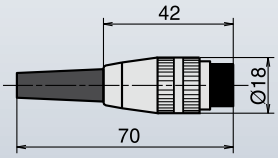

Pin assignment
male connector (view on pins)

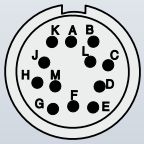

Female connector K120
12-pin

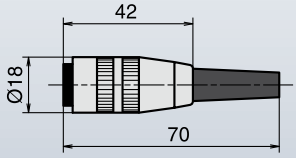

L120, K120

Pin	A	B	C	D	E	F	G	H	J	K	L	M
Sinusoidal voltage signals 1 Vpp	nc	0 V	A1	$\overline{A1}$	A2	S1*	RI	$\overline{RI}$	S2*	+5 V	$\overline{A2}$	nc
Square-wave signals via Line Driver	nc	0 V	T1	$\overline{T1}$	T2	S1*	RI	$\overline{RI}$	S2*	+5 V	$\overline{T2}$	$\overline{US}$

Shield is additionally connected with the chassis
*Version without switch signals (version 0) = nc

AIR PRESSURE UNIT DA 400

For applications where the Linear Encoders are used in harsh environments (e.g. oil and coolants), RSF offers a method of extra protection beyond the enclosed unit´s standard set of sealing lips.

An air inlet can be provided for filtered air to be input into the scale spar. A limiting flow restrictor helps set the optimum overpressure airflow inside the scale spar to further prevent oil and coolants from entering the seal.

To ensure fail-safe operation of the Linear Encoder, only „clean“ and pretreated air should be put into the scale housing.

The scale cavity should have a flow rate of about 7 to 10 l/min (per Linear Encoder). The setted overpressure (adjustable from 0.5 to 3×10^5 Pa) depends on the number of the connected Linear Encoders (max. 10 Linear Encoders) and the design of the compressed-air supply.

DA 400 consists of three filter stages (prefilter, fine filter and activated carbon filter) and a pressure regulator with pressure gauge.

To reach the promised accuracy of the measuring system, the air temperature has to be +20 °C.

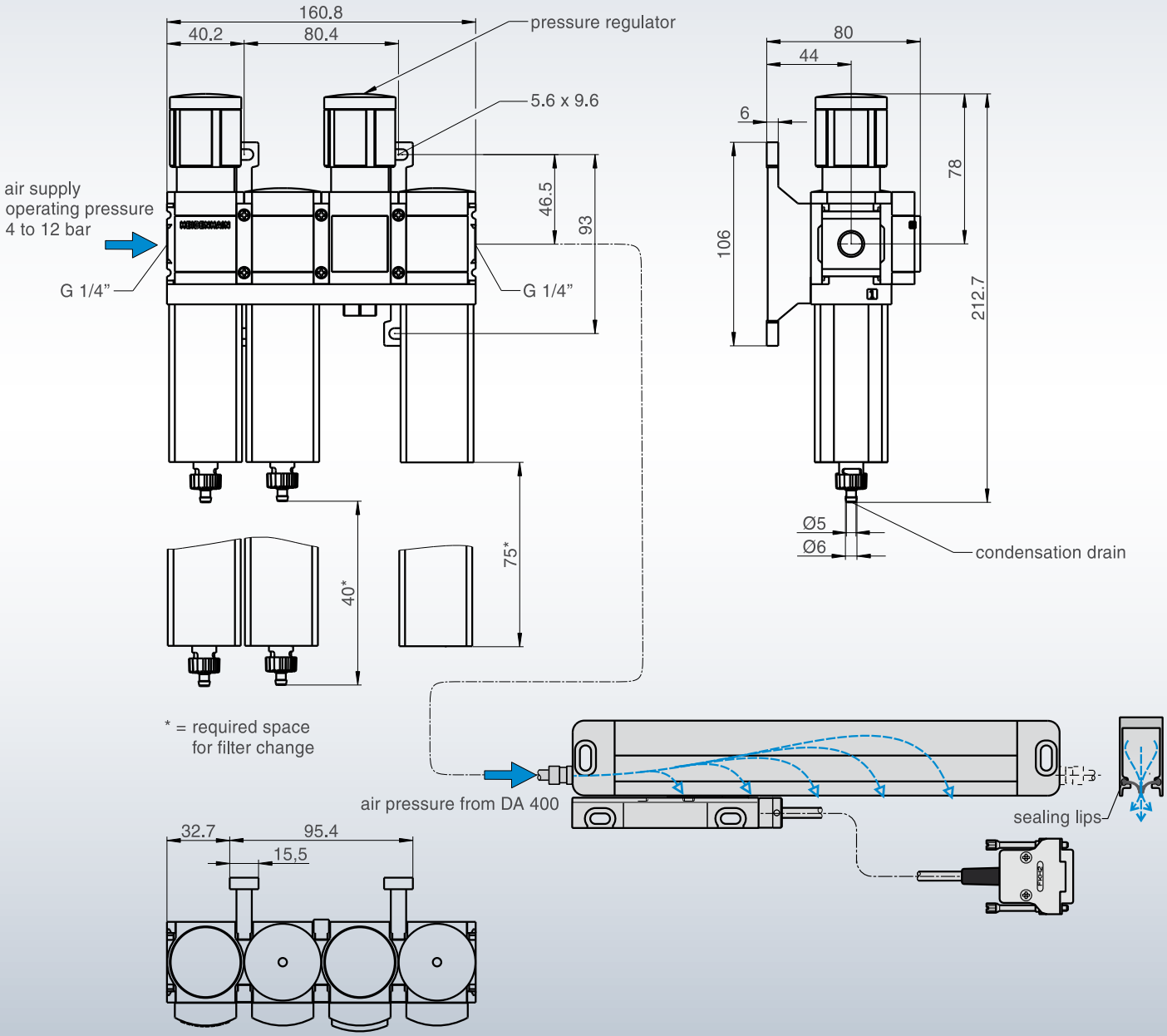

PRODUCT DIRECTORY

MS 2x Series

Reflective scanning Linear Encoder with integrated mounting control (only MS 25, MS 26)

- Easy mounting; no test box or oscilloscope needed
- Quality of the scanning signals is directly visible at the reading head via a 3-coloured LED
- Two independent switch signals for individual special functions
- Position of reference mark selectable
- High insensitivity against contamination
- High traversing speed
- Integrated subdividing: up to times 100 interpolation
- Max. measuring length Glass scale: 3140 mm Steel tape scale: 20 000 mm

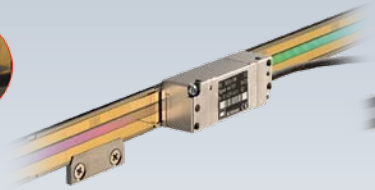

MS 30, MS 31 Series

Reflective scanning Linear Encoder

- Two independent switch signals for individual special functions
- Position of reference mark selectable
- Small dimensions
- Easy mounting as a result of large mounting tolerances
- High traversing speed
- High insensitivity against contamination
- Integrated subdividing: up to times 100 interpolation
- Max. measuring length Glass scale: 3140 mm Steel tape scale: 11 940 mm

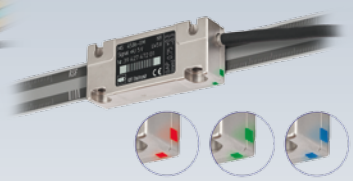

MS 45 Series

Reflective scanning Linear Encoder with integrated mounting control

- Easy mounting; no test box or oscilloscope needed
- Quality of the scanning signals is directly visible at the reading head via a 3-coloured LED
- Small dimensions
- Easy mounting as a result of large mounting tolerances
- High insensitivity against contamination
- High traversing speed
- Integrated subdividing: up to times 100 interpolation
- Max. measuring length Steel tape scale: 30 000 mm

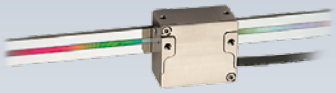

MS 82 Series

Interferential Linear Encoder

- Two switch tracks for individual special functions
- Non-contact reflective scanning
- High traversing speed
- Small dimensions
- Scale unit: glass scale or ROBAX® glass cramic scale with phasse grating
- Max. measuring length Glass scale: 3140 mm Glass ceramic: 1840 mm

MS 14 Series

Reflective scanning Linear Encoder with integrated mounting

- Easy mounting; no test box or oscilloscope needed
- Quality of the scanning signals is directly visible at the reading head via a 3-coloured LED
- Extremely small dimensions
- Easy mounting as a result of large mounting tolerances
- High insensitivity against contamination
- High traversing speed
- Integrated subdividing: up to times 100 interpolation
- Max. measuring length Steel tape scale: 20 000 mm

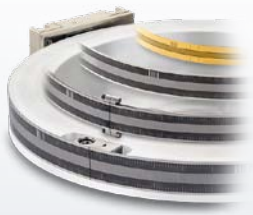

MSR 40

Modular Rotary Encoder with steel tape scale

Different versions

- Full-circle or segment version
- Grating pitch: 200 µm
- Accuracy of the grating (stretched): ±30 µm/m
- High rotational speed resp. circumferential speed
- Integrated subdividing: up to times 100 interpolation

MSR 20

- Segment version
- Grating pitch: 40 µm
- Accuracy of the grating (stretched): ±15 µm/m
- High circumferential speed
- Integrated subdividing: up to times 100 interpolation

DG 118, DG 120

Rotary Encoder for universal application

- Standard line/rev.: graduated from 100 to 5400

DIT 10, DIT 30, DIT 48

Precision Measuring Probes

- For universal applications
- Stroke length: 10, 30, 48 mm
- Mounting on shaft sleeve
- Mounting with two tapped holes on body (DIT 30, DIT 48)
- With cable lifter
- Integrated pneumatic lifter optional
- Sealing bellows optional (DIT 30, DIT 48)

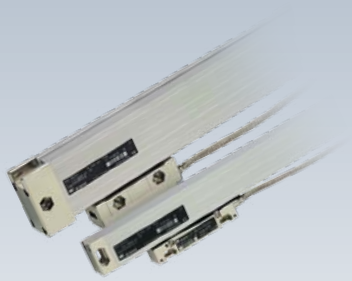

MSA 65x, MSA 35x

Sealed Linear Encoders

- For retrofit of machine tools
- Large mounting tolerances
- Guided by ball bearings
- Distance-coded reference marks
- Two sets of sealing lips for additional contamination protection (only MSA 352)
- Mounting holes on the extrusion ends (MSA 650, MSA 35x)
- Mounting holes on top of the extrusion - improves vibration rating (MSA 651)
- Mounting supports (MSA 35x)
- Max. measuring lengths:
  MSA 650: 1740 mm
  MSA 651: 2240 mm
  MSA 35x: 3040 mm

Z 300

Digital Readouts
for universal application

- Number of alphanumeric axis: 2 or 3
- Monochrome flat screen
- Clearly readable display
- Robust cast aluminum housing
- Splash-proof fulltravel keypad
- Practice-oriented functions
- Standard version for turning, drilling or milling machine

UFC 430

USB-Interface-Module

- USB-interface acc. to spec. 2.0
- Available inputs: 1 Vpp max. 200 kHz or TTL (RS 422) max. 500 kHz
- Interpolation: up to times 400 for measuring systems with output 1 Vpp and up to times 4 for measuring systems with square-wave Line Driver signals
- Three 15-pin Sub-D female connectors for 3 encoder inputs
- 32 Bit counter with preset and latch register

IFC 430R

Encoder-interface-card

- PC interface board for quadrature encoder signal evaluation: times 1, -2 or -4
- Latch logic for measured values
- Three counter channels à 32 bit, one load and two latch registers for each channel
- PC bus
- Signal edge separation: up to 100 ns
- Demo program with examples and driver software

Precision Graduations

- Length graduations on glass, chromium coated
- Length graduations on steel tape, gold coated or polished surface
- Circular graduations on glass, chromium coated
- Graticules
- Antireflex coatings
- Coatings

Cable Systems

- Individual cable design
- Hybrid cable
- Trailing cable
- System solutions
- Function control

DISTRIBUTION CONTACTS

Austria
Corporate
Head Quarters

RSF Elektronik Ges.m.b.H.
A-5121 Tarsdorf
☏ +43 (0) 62 78 81 92-0
FAX +43 (0) 62 78 81 92-79
e-mail: info@rsf.at
internet: www.rsf.at

France

HEIDENHAIN FRANCE sarl
2 Avenue de la Christallerie
92310 Sèvres
☏ +33 1 41 14 30 00
FAX +33 1 41 14 30 30
e-mail: info@heidenhain.fr

United Kingdom

HEIDENHAIN (GB) Ltd.
200 London Road
Burgess Hill
West Sussex RH15 9RD
☏ +44 (0)1444 238550
FAX +44 (0)1444 870024
e-mail: sales@heidenhain.co.uk

Italy

HEIDENHAIN ITALIANA S.r.l.
Via Asiago, 14
20128 Milano (MI)
☏ +39 02 27075-1
FAX +39 02 27075-210
e-mail: info@heidenhain.it

Switzerland

RSF Elektronik (Schweiz) AG
Vieristrasse 14
CH-8603 Schwerzenbach
☏ +41 44 955 10 50
FAX +41 44 955 10 51
e-mail: info@rsf.ch
internet: www.rsf.ch

Slovenia

RSF Elektronik prodaja, d.o.o.
Jozeta Jame 14
SI-1210 Ljubljana
☏ +386 (0) 1 519 88 80
FAX +386 (0) 1 519 88 80
e-mail: mail@rsf-elektronik.si

China

RSF Elektronik GmbH
Tian Wei San Jie,
Area A, Beijing Tianzhu Airport Industrial Zone
Shunyi District
101312 Beijing
P.R. China
☏ +86 (0) 10 80 42 02 88
FAX +86 (0) 10 80 42 02 90
e-mail: cao.shizhi@rsf.cn
internet: www.rsf.cn

Korea

HEIDENHAIN LTD.
202 Namsung Plaza, 9th Ace Techno Tower,
130, Digital-Ro, Geumcheon-Gu,
Seoul, Korea 153-782
☏ +82 (0) 2 20 28 74 30
e-mail: info@heidenhain.co.kr
internet: www.rsf.co.kr

USA

HEIDENHAIN CORPORATION
333 East State Parkway
Schaumburg, IL 60173-5337
☏ +1 847 490 11 91
e-mail: info@heidenhain.com
internet: www.rsf.net

Date 08/2013 ■ Art.Nr. 1082066-01 ■ Doc.Nr. D1082066-00-A-01 ■ Technical adjustments in reserve!

RSF Elektronik
Ges.m.b.H.

Linear Encoders
Digital Readouts
Precision Graduations
Cable Systems

Certified acc. to
DIN EN ISO 9001
DIN EN ISO 14001