V-ROBOT®
Linear Drives

www.motiontech.com.au

CONTENTS

Product Selection 002
Specification List 008
Cartesian Robot Configuration 010
Applications 015
Product Structure &Function 022
Product Selection Guidance 031

LMD-F14-T1 254
LMD-F17-T1 256
LMD-F22-T1 258
LMD-T20-T1 260
LMD-T28-T1 262
LMD-T35-T1 264
LT8 Tubular Iron Core Linear Motor 266
LT14 Tubular Iron Core Linear Motor 268
LT17 Tubular Iron Core Linear Motor 270
LC14 Flat Iron Core Linear Motor 272
LC17 Flat Iron Core Linear Motor 274
LC22 Flat Iron Core Linear Motor 276
2LC14 Flat Iron Core Linear Motor 278
LT76 Linear Motor (Closed Type) 280
LMDT Linear Motor (Closed Type) 281
AppenduxA:Technical Terms 282
How to select a Linear Motor 283

12

▶P.253

LMD-F14-T1

Maximum Stroke 3000mm
Body Width 140mm ····· 255
Repeatability ±0.005 mm

LMD-F17-T1

Maximum Stroke 3000mm
Body Width 170mm ····· 257
Repeatability ±0.005 mm

LMD-F22-T1

Maximum Stroke 3150mm
Body Width 220mm ····· 259
Repeatability ±0.005 mm

LMD-T20-T1

Maximum Stroke 1000mm
Body Width 200mm ····· 261
Repeatability ±0.005

LMD-T28-T1

Maximum Stroke 1000mm
Body Width 280mm ····· 263
Repeatability ±0.005 mm

LMD-T35-T1

Maximum Stroke 800mm
Body Width 350mm ····· 265
Repeatability ±0.005 mm

W-ROBOT® Linear Drives

LT8	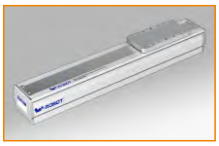	Maximum Stroke	800mm
		Body Width	80mm·····267
		Repeatability	±0.01mm
LT14		Maximum Stroke	800mm
		Body Width	140mm···269
		Repeatability	±0.01mm
LT17		Maximum Stroke	800mm
		Body Width	170mm···271
		Repeatability	±0.01mm
LC14		Maximum Stroke	2000mm
		Body Width	140mm····273
		Repeatability	±0.01mm
LC17		Maximum Stroke	2000mm
		Body Width	170mm····275
		Repeatability	±0.01mm
LC22		Maximum Stroke	2000mm
		Body Width	220mm ··· 277
		Repeatability	±0.01mm
2LC14		Maximum Stroke	2000mm
		Body Width	140mm····279
		Repeatability	±0.01mm
LT76 linear motor (Closed type)		Maximum Stroke	Top :300 Bottom :300
		Body Width	15KG·····280
		Repeatability	±0.01mm
LMDT linear motor (Closed type)	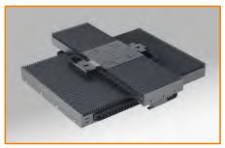	Maximum Stroke	Top :300 Bottom :300
		Body Width	15KG·····281
		Repeatability	±0.01mm

Specification

W-ROBOT®
Linear Drives

Company	_____	Register Date	_____	Contact	_____
Dept	_____	Tel	_____	Ext	_____
E-mail	_____	Mobile	_____	Address	_____

Single axis required

Stroke (mm): _____

Speed (mm/s): _____

Payload (kg): _____

Repeatability(mm) :

☐ ±0.006

☐ ±0.01

☐ ±0.04

☐ Other _____

Usage Environment

☐ General

☐ Dust-free (Cleaness type)

(Cleanliness: Class10 Class100 Class1000)

Installation Way	Fixed whole-plane Horizontal 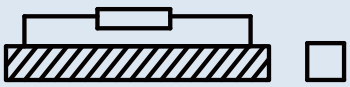 Side 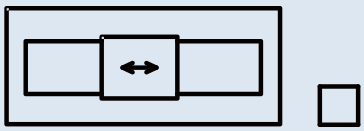 Vertical 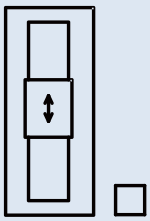
Space required	Loose model choice Ball Screw Drive 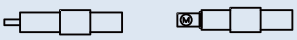 ☐BA ☐ BC (standard) Belt Drive 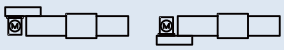 ☐BR ☐BL Compact model choice Ball Screw Drive 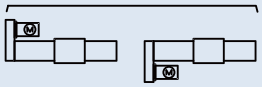 ☐BR ☐BL Belt Drive 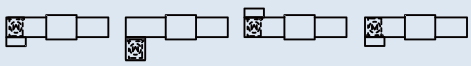 ☐BLU ☐BRU ☐BRD ☐BLD Motor Power can be increased by external installed
Sensor	☐ Optoelectronic type(External) ☐ Metal induction type(External)
Applications	☐ Automatic Assembly Machine ☐ Labeling Machine ☐ Film Sticking Machine ☐ Laminating Machine ☐ Auto-Screwdriving Machine ☐ Spraying Machine ☐ CCD Visual Inspection Equipment ☐ Loading and Unloading Equipment
Remarks	

Specification

Company	_____	Register Date	_____	Contact	_____
Dept	_____	Tel	_____	Ext	_____
E-mail	_____	Mobile	_____	Address	_____

Multi Axis Required

Stroke (mm) X: Y: Z:

Speed (mm/s) X: Y: Z:

Payload (kg):

Repeatability(mm) :

☐ ±0.006

☐ ±0.01

☐ ±0.04

☐ 其它(Other)_____

Usage Environment

☐ General

☐ Dust-free (Cleaness type)

(Cleanliness: Class10 Class100 Class1000)

Combination Types

Arm Type

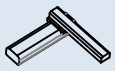

(A1) ☐

(A2) ☐

(A3) ☐

(A4) ☐

Gantry Type

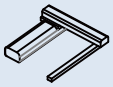

(G1) ☐

(G2) ☐

(G3) ☐

(G4) ☐

Moving Arm Type

(P1) ☐

(P2) ☐

XZ Type

(F1) ☐

(F2) ☐

Multi-axis Type

Reference the P11-15 : Images No.

☐ Arm type with 2-axis(A)

☐ Arm type with 3-axis(A)

☐ Gantry type with 2-axis(G)

☐ Gantry type with3-axis(G)

☐ Spontaneous Moving Gantry type with 2-axis(G)

☐ XY type with 2-axis(F)

☐ Moving arm type with 2-axis(P)

☐ Moving arm type with 3-axis(P)

Sensor

☐ Optoelectronic type(External) ☐ Metal induction type(External)

Applications

☐ Automatic Assembly Machine ☐ Film Sticking Machine ☐ Laminating Machine

☐ Auto-Screwdriving Machine ☐ Spraying Machine ☐ CCD Visual Inspection Equipment ☐ Other _____

Remarks

Cartesian Robot Configuration

W-ROBOT®
Linear Drives

Multi-axis combination models as figure below, if other models required, consultation service available basing on request.

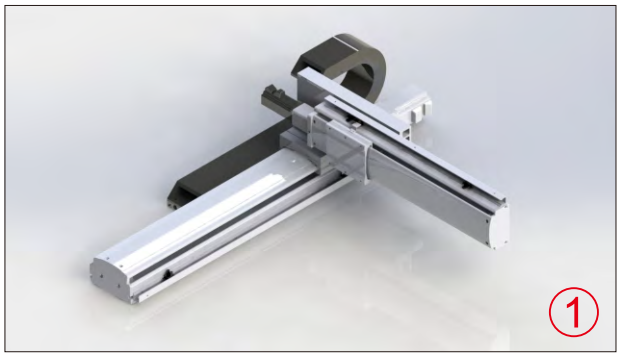

Arm type with 2 axes (A series)

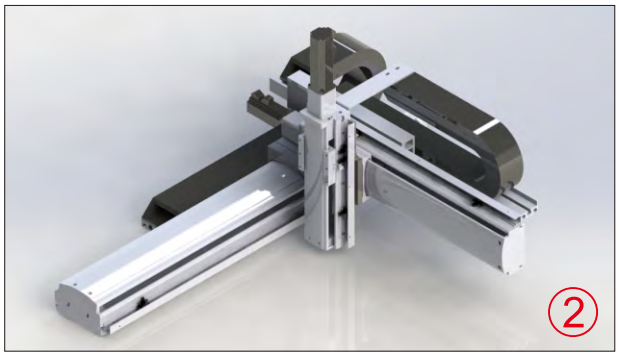

Arm type with 3 axes (A series)

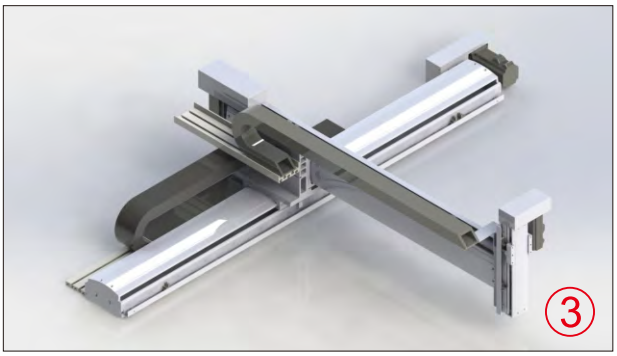

Arm type with 3 axes (A series)

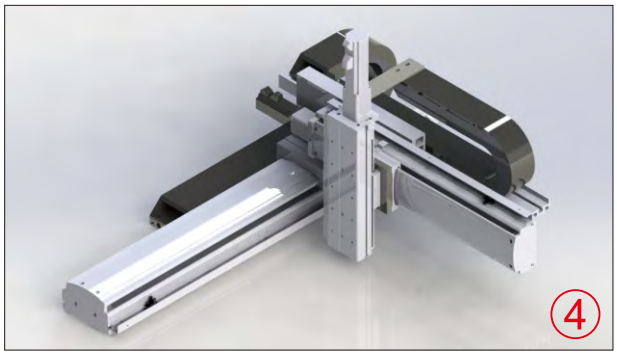

Arm type with 3 axes (A series)

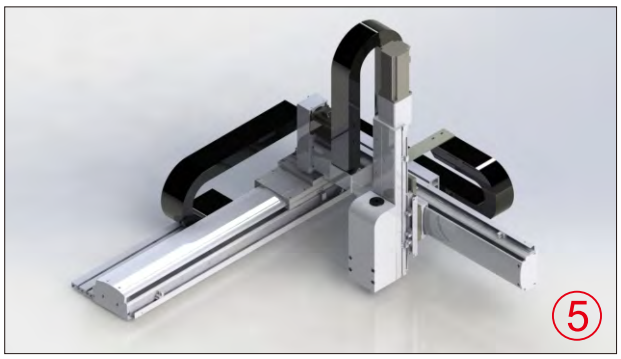

Arm type with 4 axes (AR series)

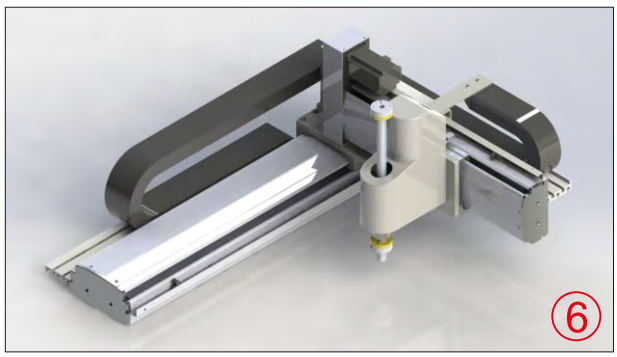

Arm type with 4 axes (AZR series)

Cartesian Robot Configuration

Arm type with 6 axes (A series)

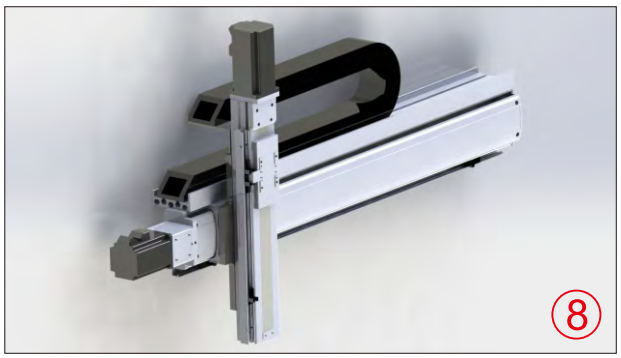

Cross 2 axes (F series)

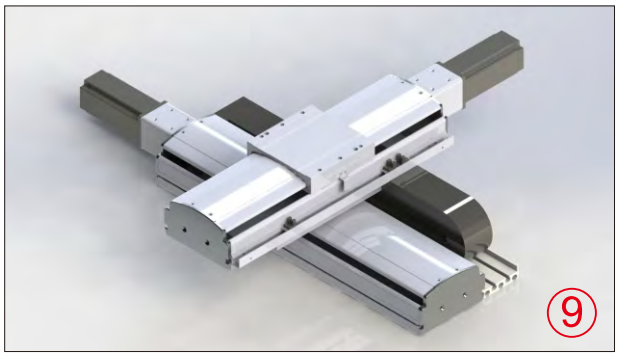

Cross 2 axes (F series-Horizontal)

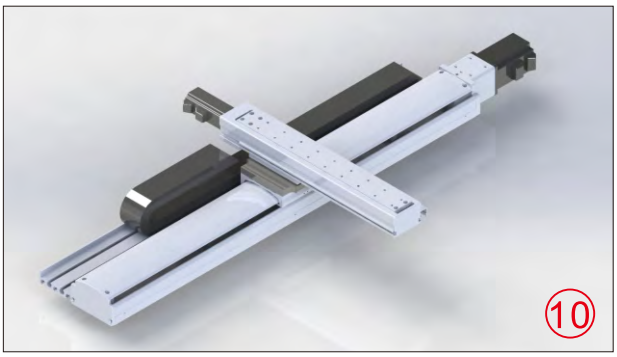

Cross 2 axes (F series-movement by Y axis)

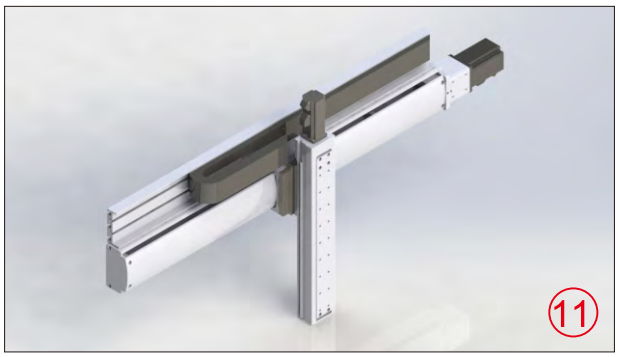

Cross 2 axes (F Series - Z-axis body moved)

Gantry 2 axes (G series)

Gantry 3 axes (G series)

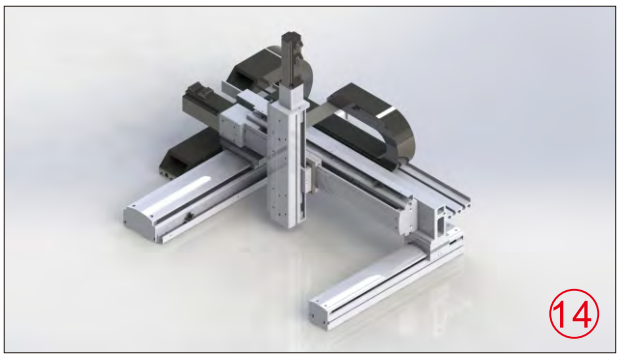

Gantry 3 axes (G series)

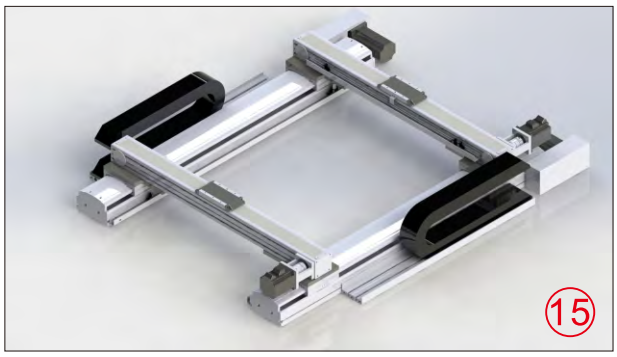

Gantry combinatorial association (G series)

Cartesian Robot Configuration

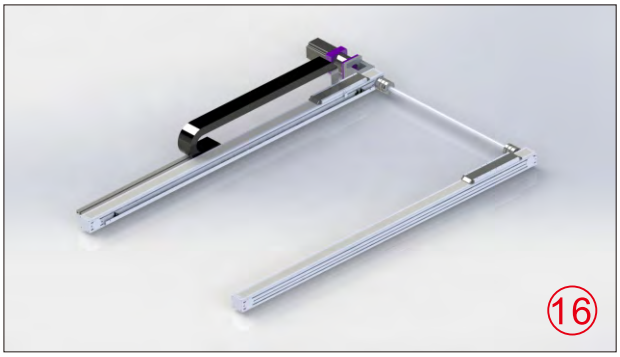

Synchronous moving gantry axes

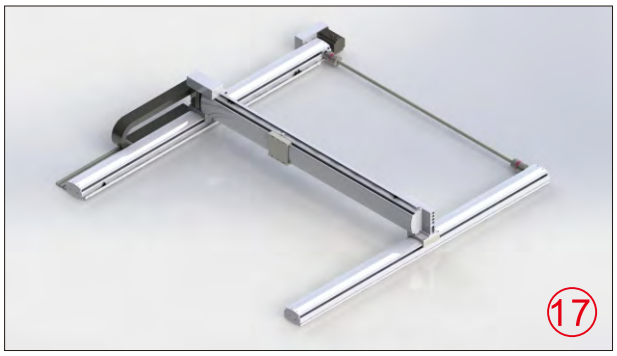

Synchronous moving gantry type with 2 axes

Synchronous moving gantry type with 3 axes

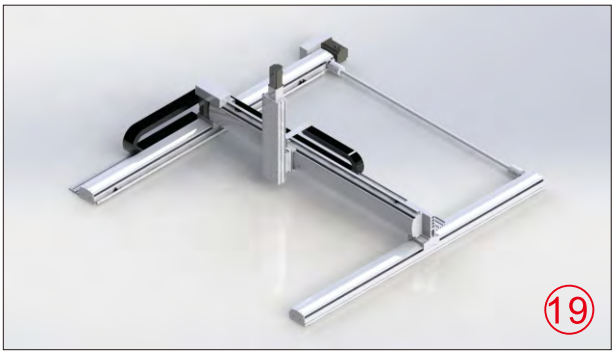

Synchronous moving gantry type with 3 axes
(G series- Z-axis body moved)

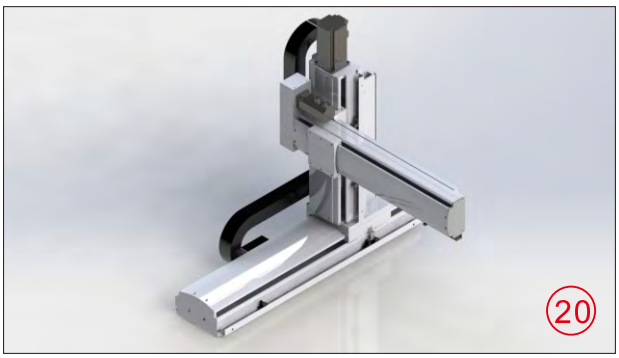

Moving arm type with 3 axes(P series)

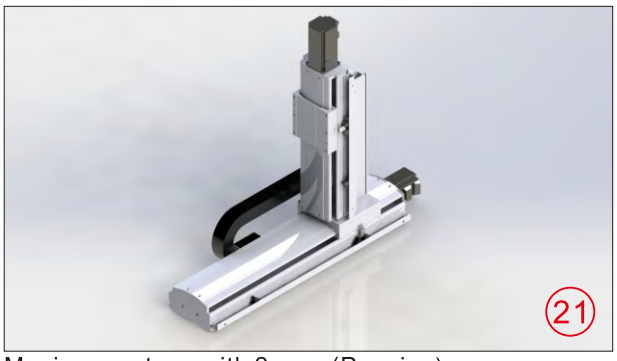

Moving arm type with 2 axes(P series)

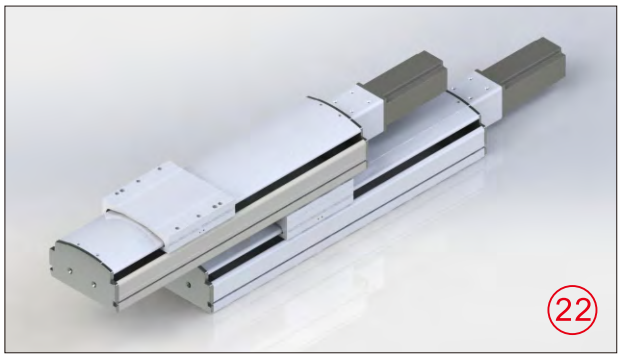

Stack-based 2 axes (E series)

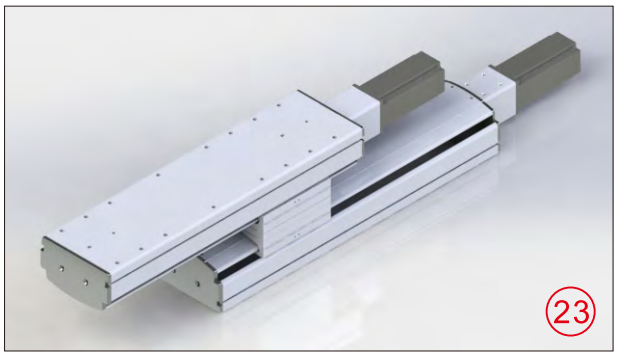

Stack-based 2 axes (E series-slide block fixed, body moved)

Moving arm type with 8 axes (P series)

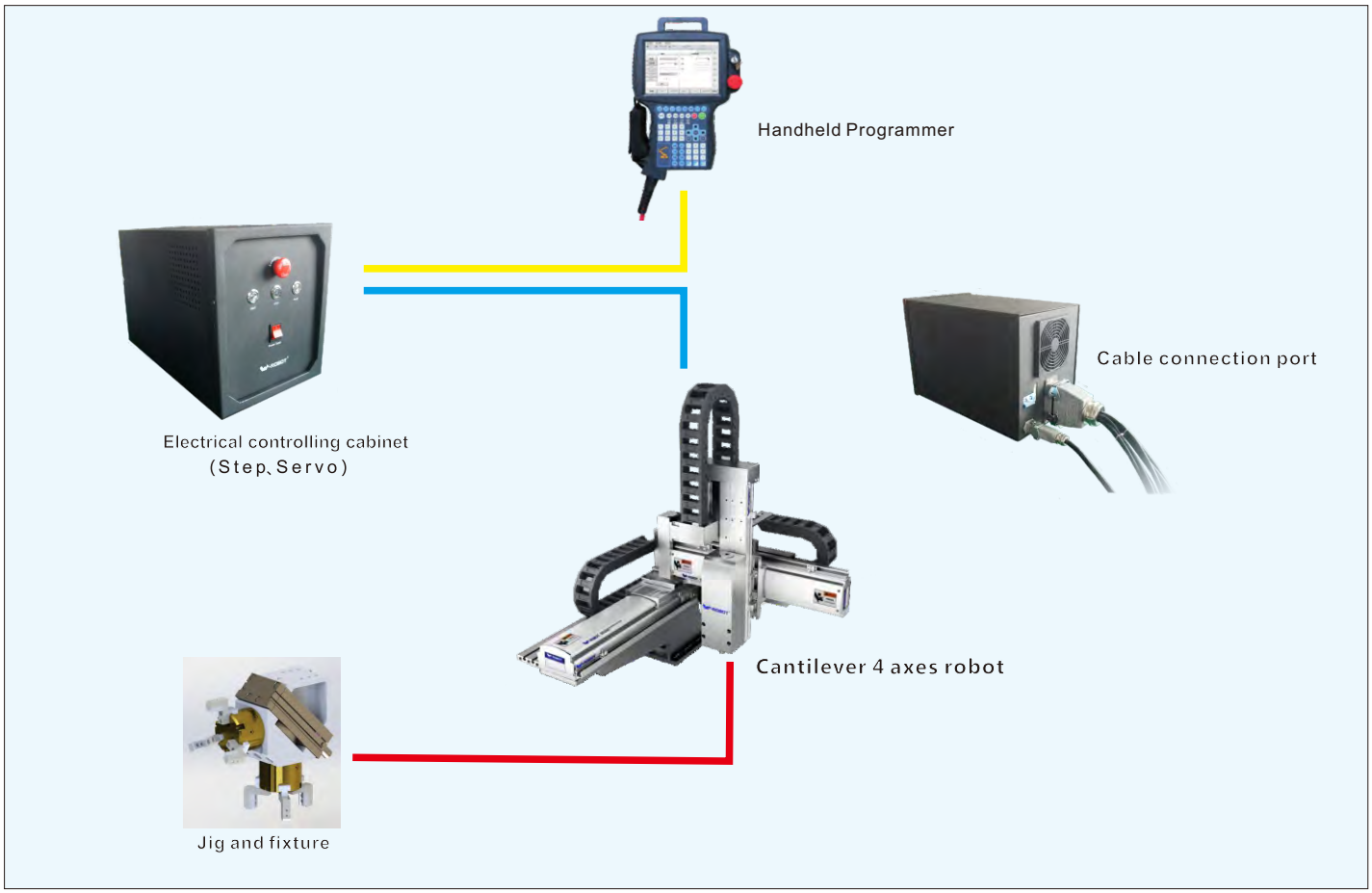

Robot arm control system

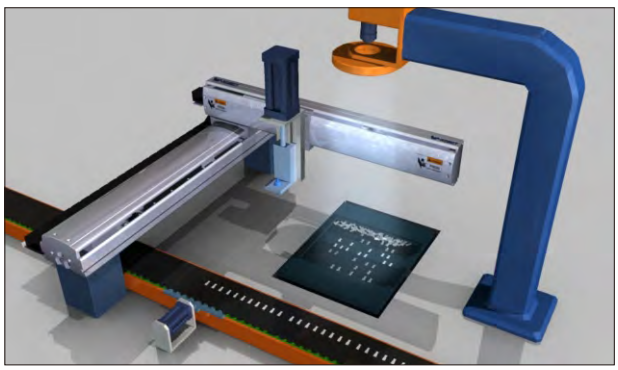

Auto-loading after CCD visual checking

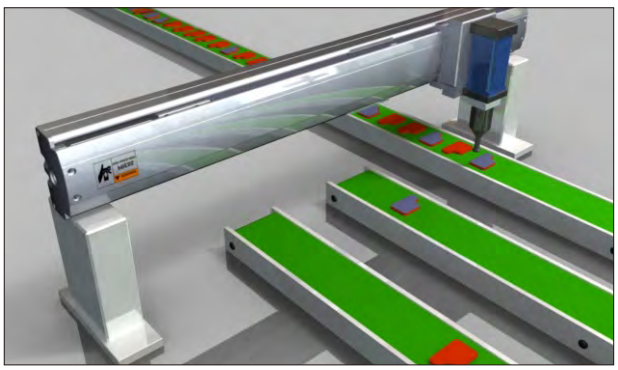

Sorting parts on the specified position

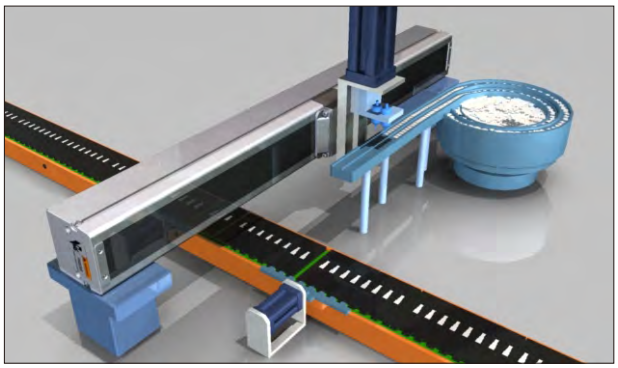

Picking parts from the vibrating bowl

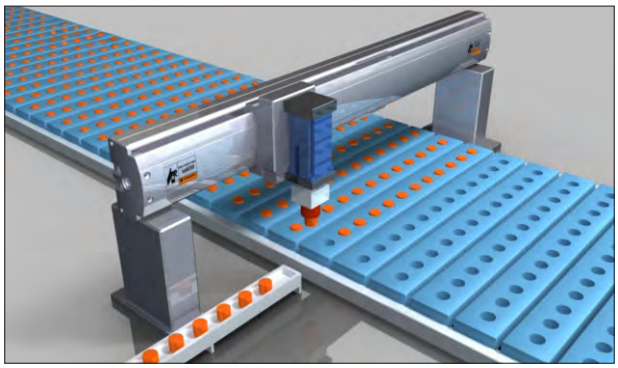

Press the workpiece into the hole

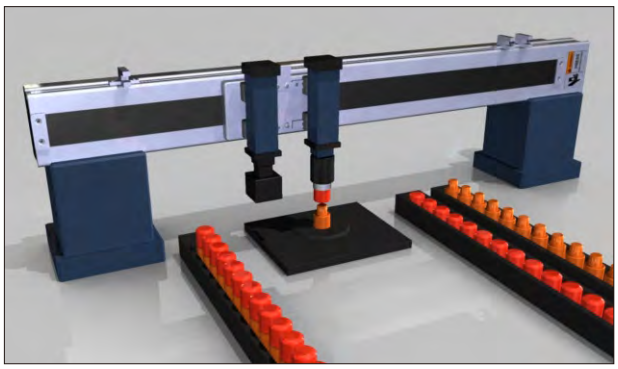

Parts assembling

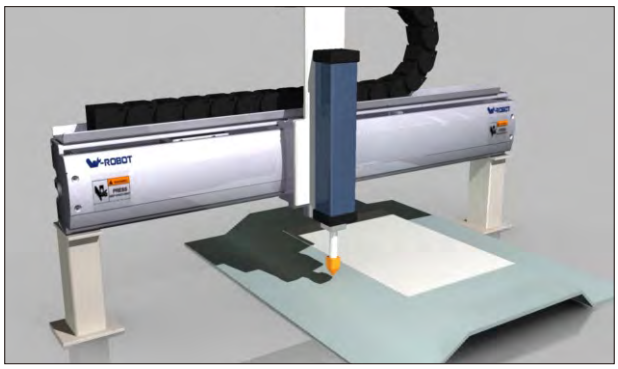

Inkjet operation

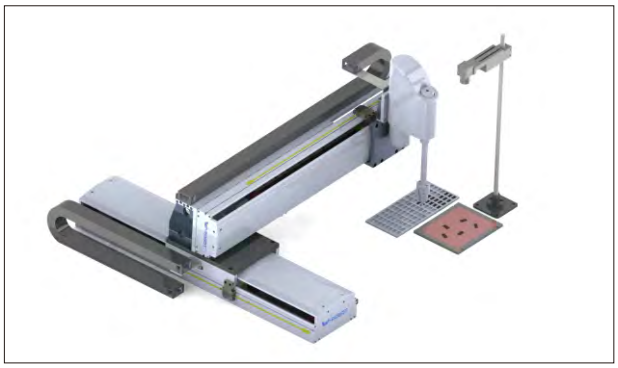

Flexible picking

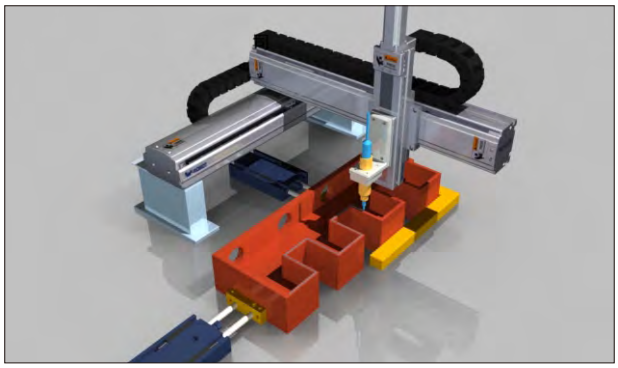

Sealant gluing to the joint of workpiece

Applications

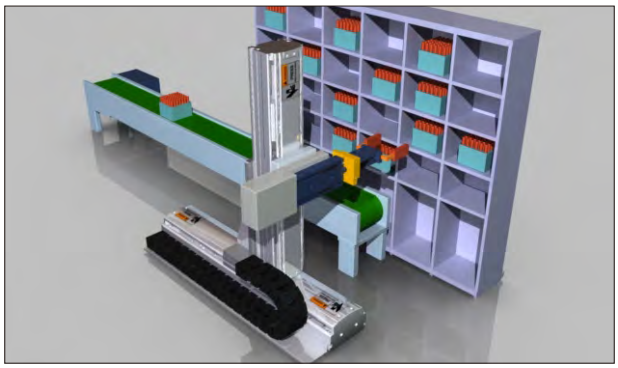

Large-scale parts rack pick & place

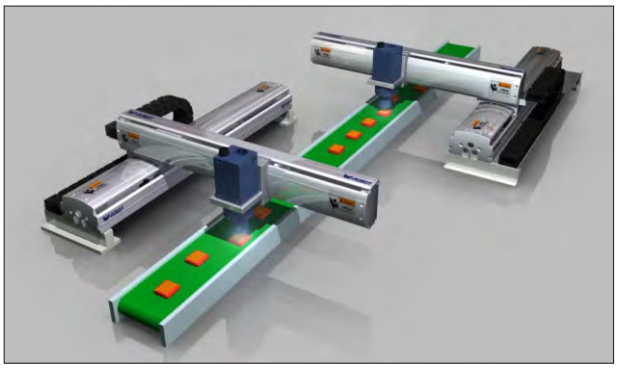

Electric parts testing

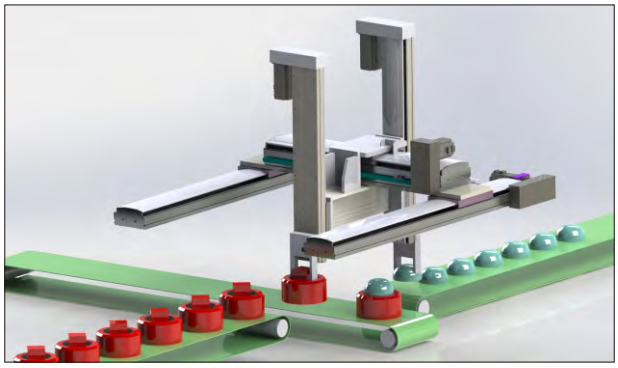

Parts handling

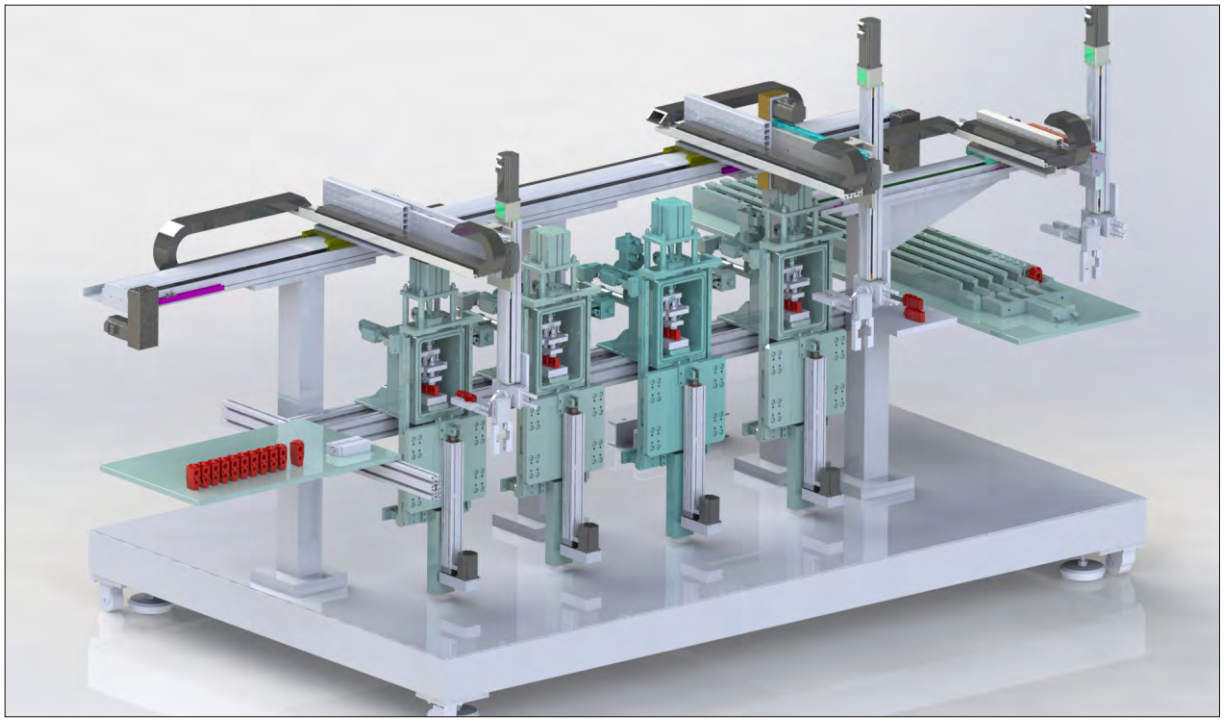

Auto-loading & unloading for parts testing system

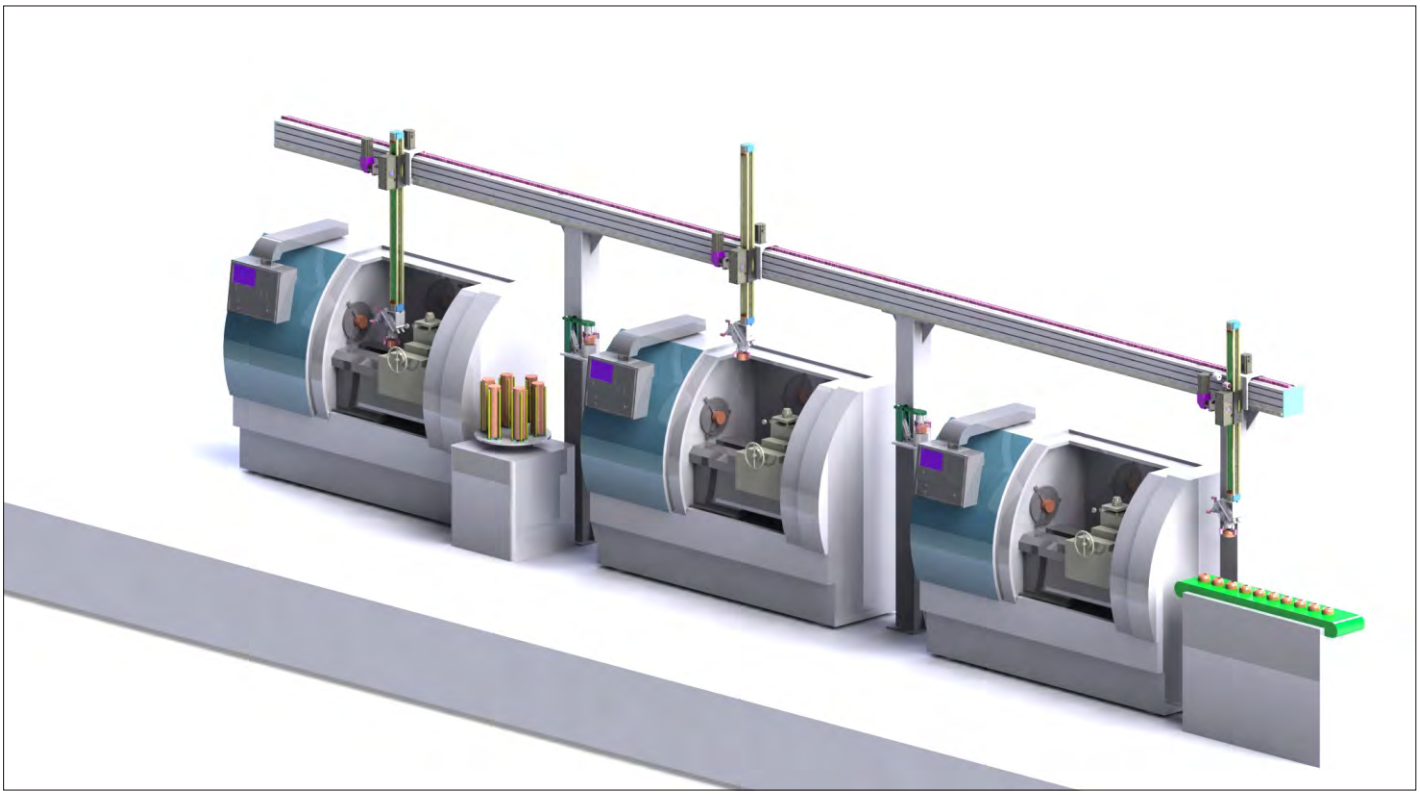

CNC loading & unloading

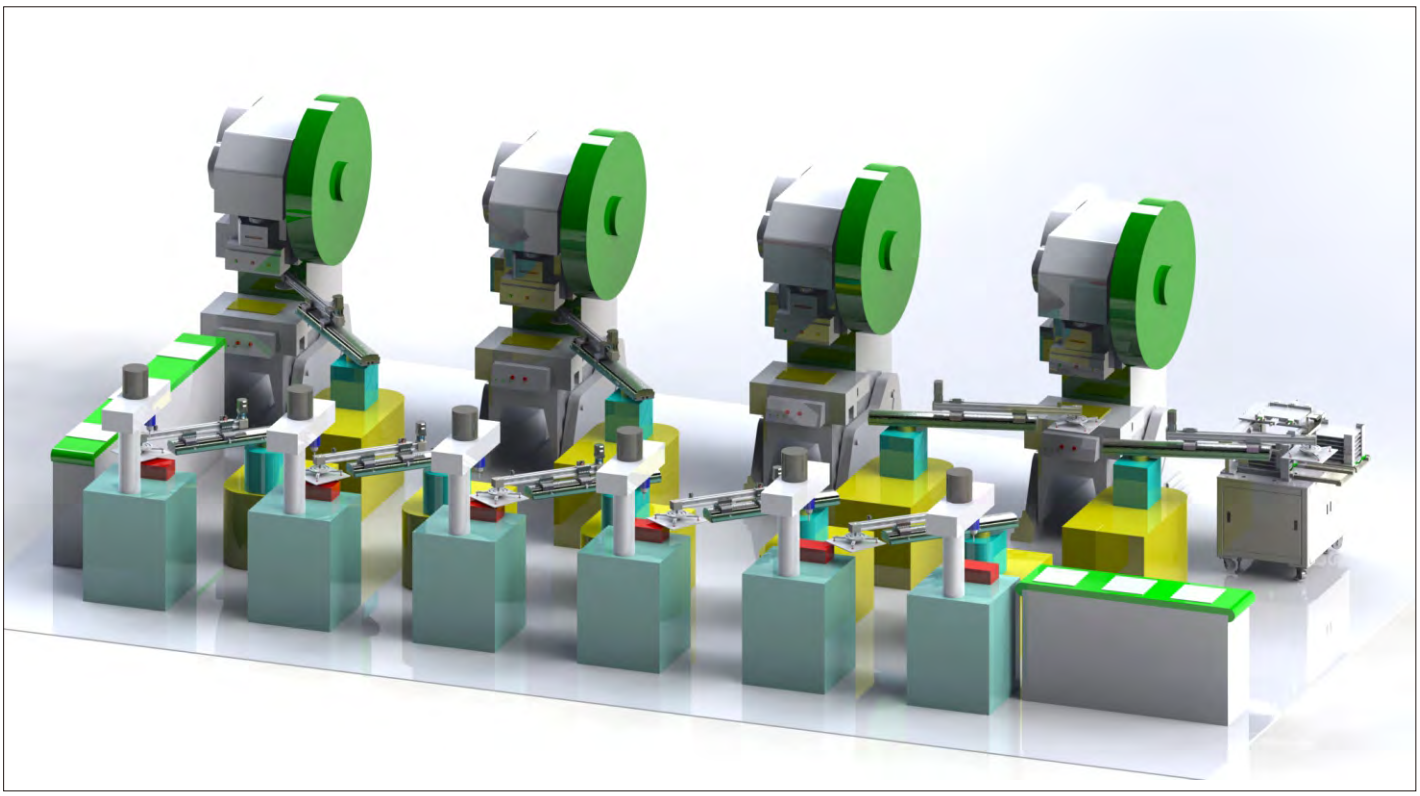

Punching

Applications

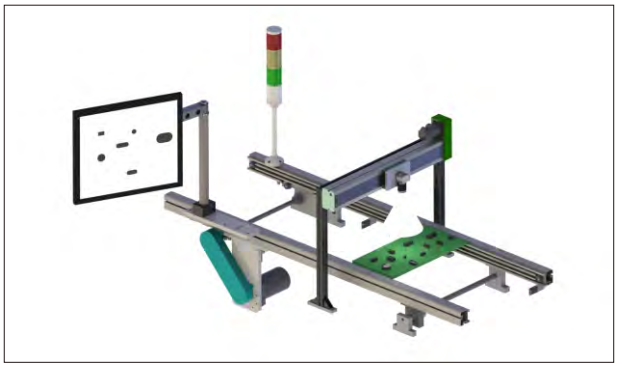

PCB testing

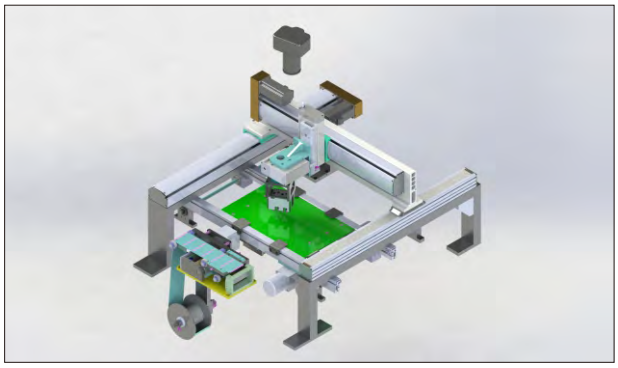

PCB labelling

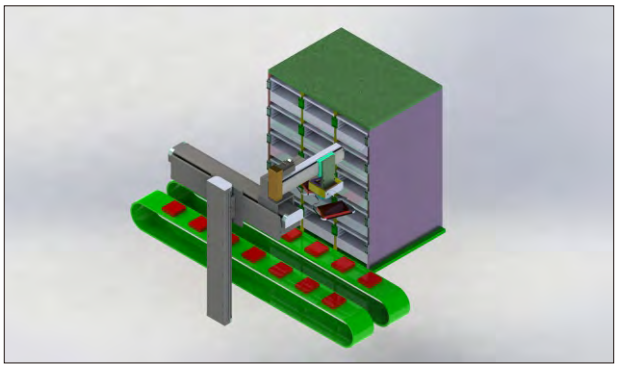

Products inside the shielded box loading & unloading

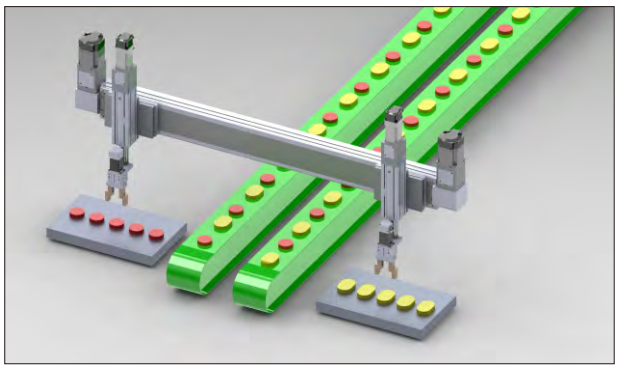

Multiple production lines with various products loading operation

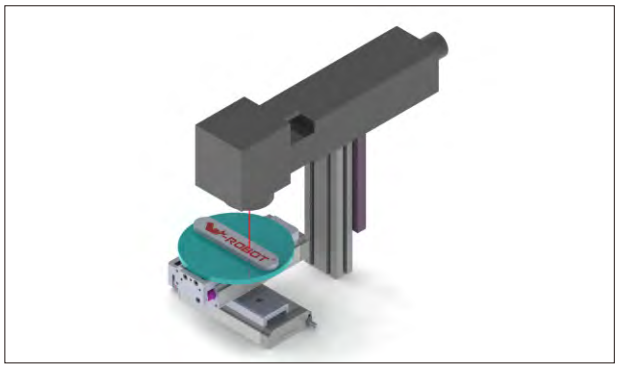

Laser marking

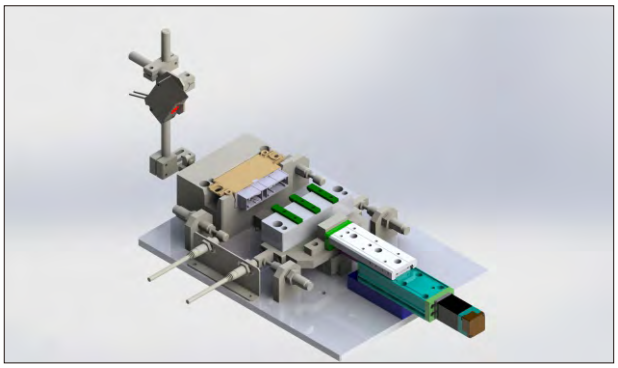

The connector insertion and pull test

Applications

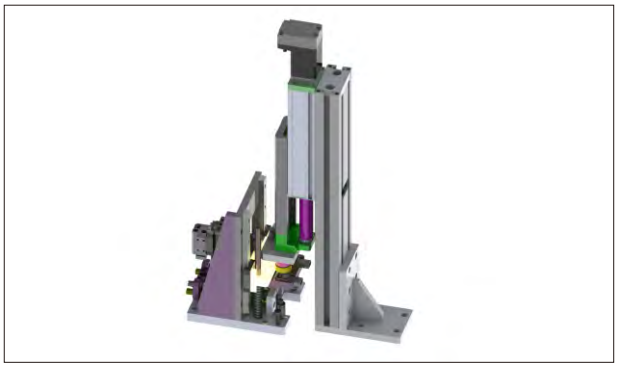

Pressing fit parts in a thrust

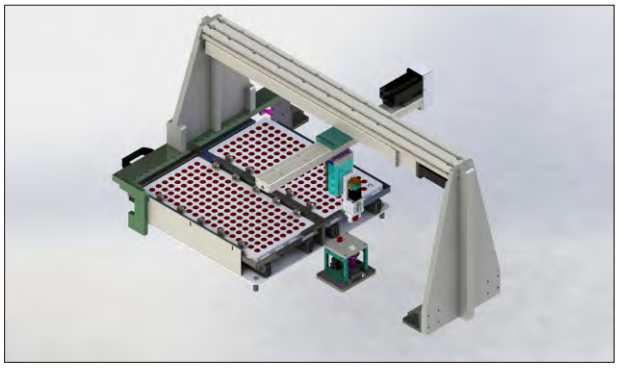

Picking and positioning auto parts

Sticking a mobile phone screen

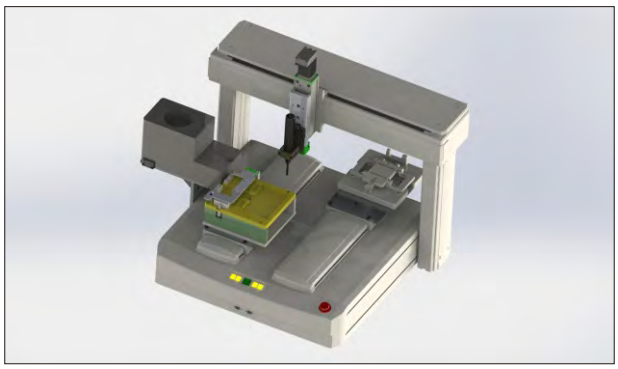

Automatic screw locking machine

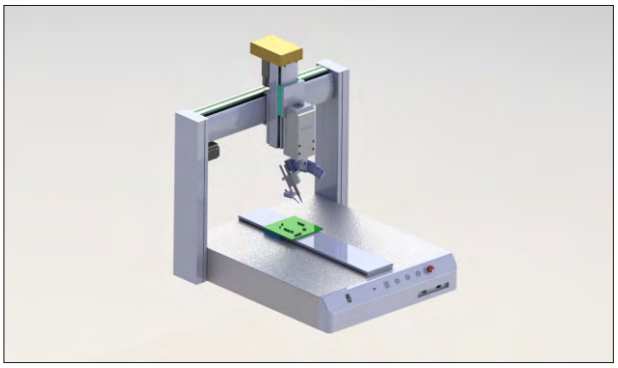

Automatic PCB welding operation

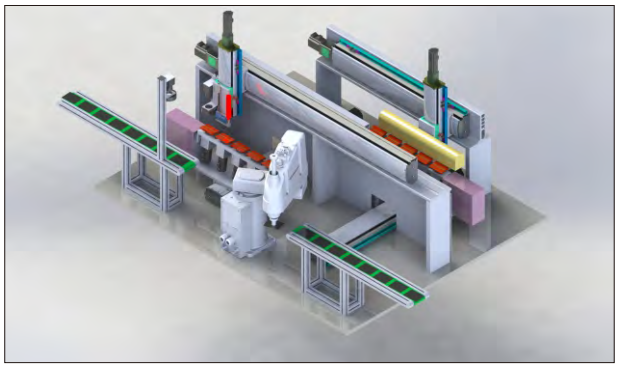

Flexible positioning and high speed precise dispensing

W-ROBOT® Linear Drives

Feature of dust-free linear actuators

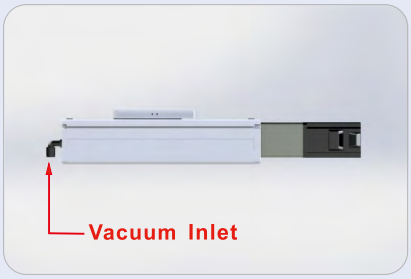

It's possibele to connect the vacuum tube under the dust-free situations cleaning the micro dust appeared from the actuator's inner friction.

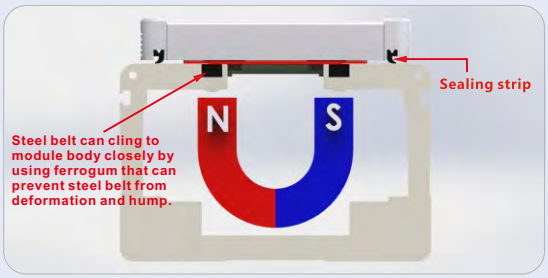

Dust-free linear actuators (In W-robot's standard configuration, no sealing strip available from which micro dust would occur in dust-free environment, but it's available basing on request)

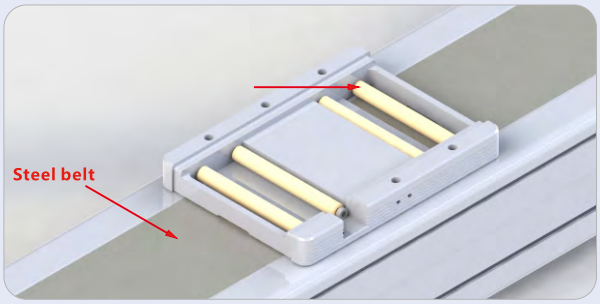

Adopting wear resistant rubber roller to realize rolling friction between sliding stage and steel belt. It helps reducing micro dust and lowering noise

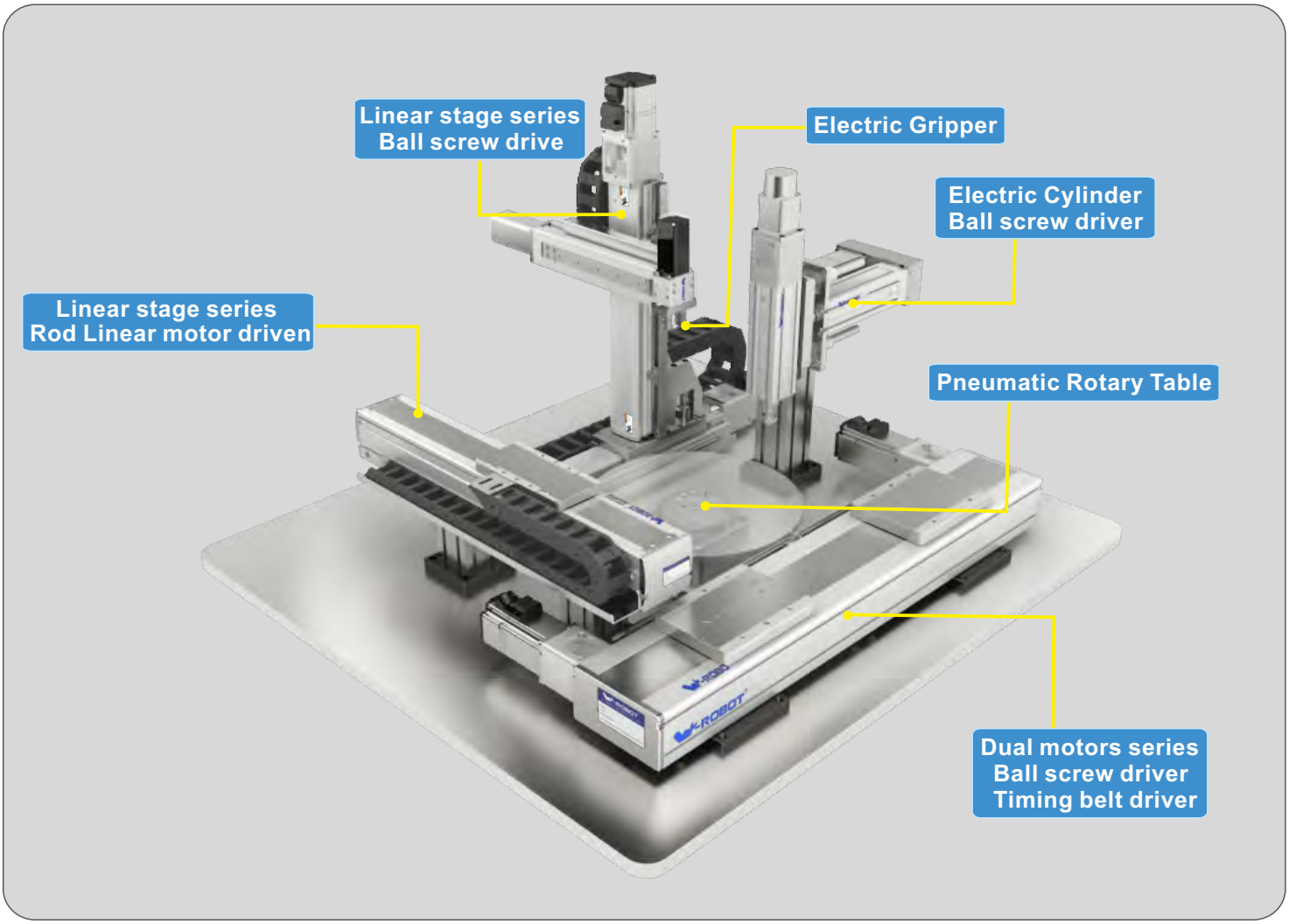
Linear stage series
Ball screw drive
Electric Gripper
Electric Cylinder
Ball screw driver
Linear stage series
Rod Linear motor driven
Pneumatic Rotary Table
Dual motors series
Ball screw driver
Timing belt driver

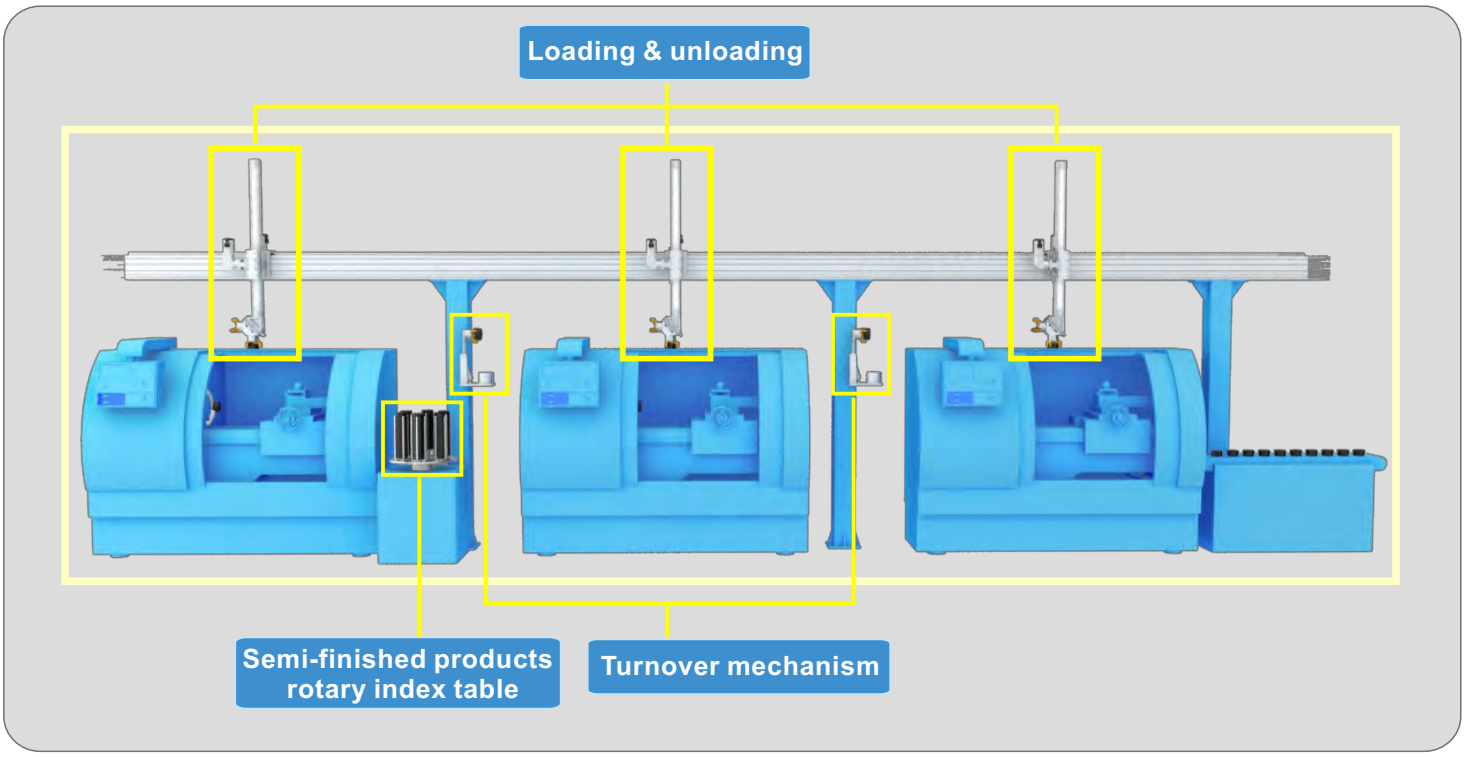
Loading & unloading
Semi-finished products
rotary index table
Turnover mechanism

Dual Motors Series

Pick & place on multi-station conveyor

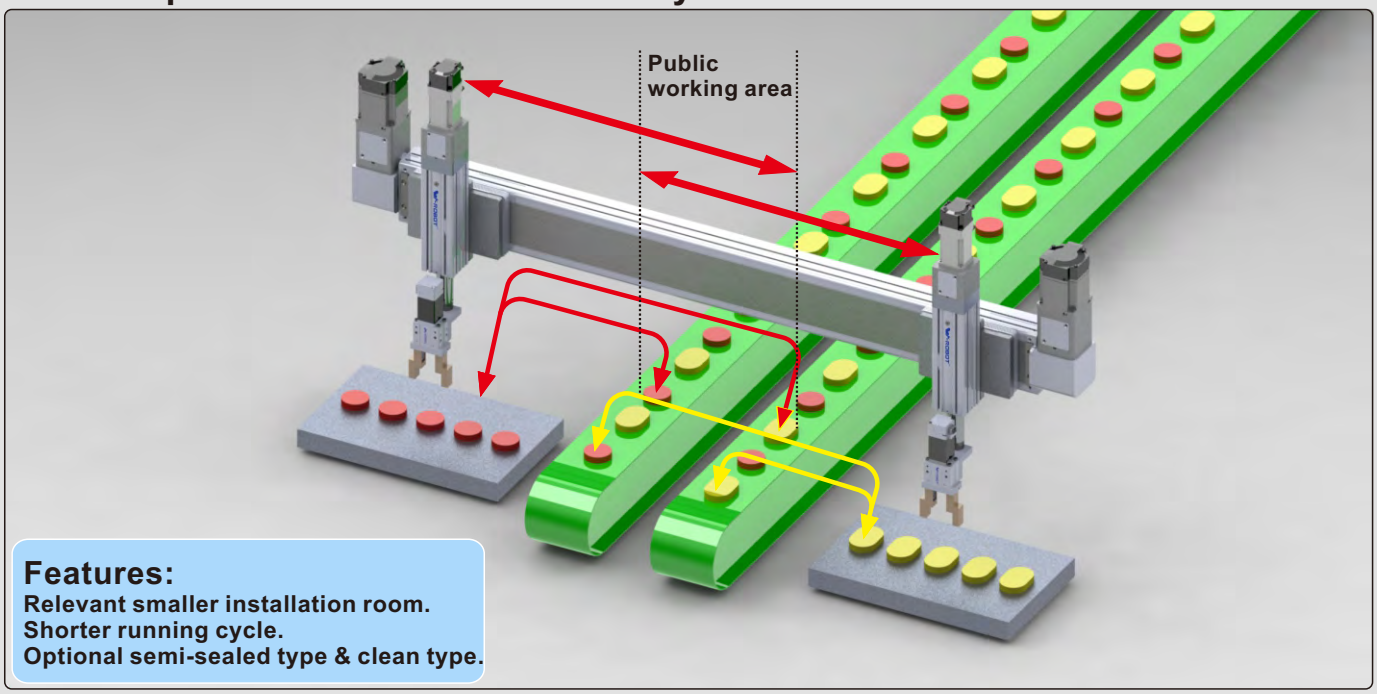

Features:
Relevant smaller installation room.
Shorter running cycle.
Optional semi-sealed type & clean type.

Loading & unloading on the multi-station testing equipment

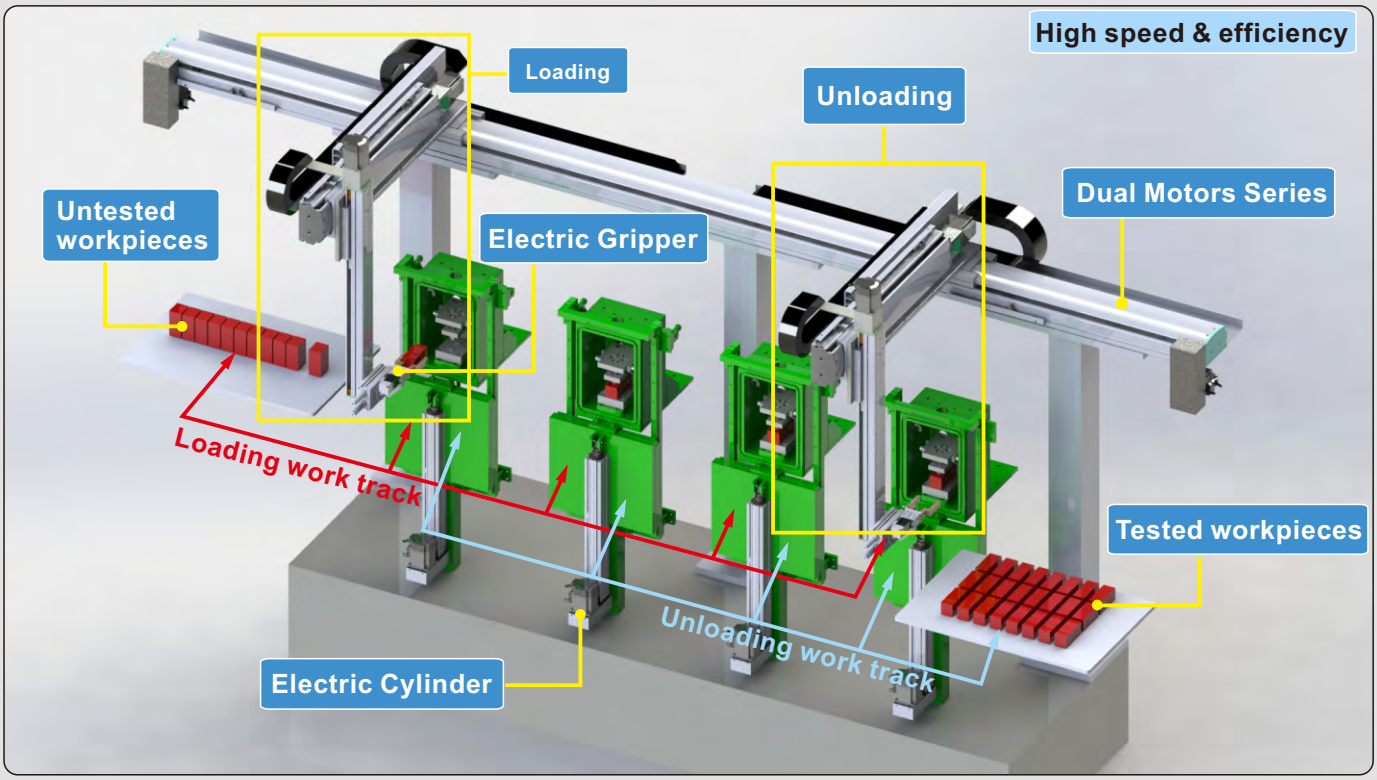

Linear Motor Model

■Maximum Stroke : 3150mm ■Maximum Speed: 3000mm/s ■Repeatability :±0.005mm

LMD-F14-T1 LMD-F17-T1 LMD-F22-T1 LMD-T20-T1 LMD-T28-T1 LMD-T35-T1

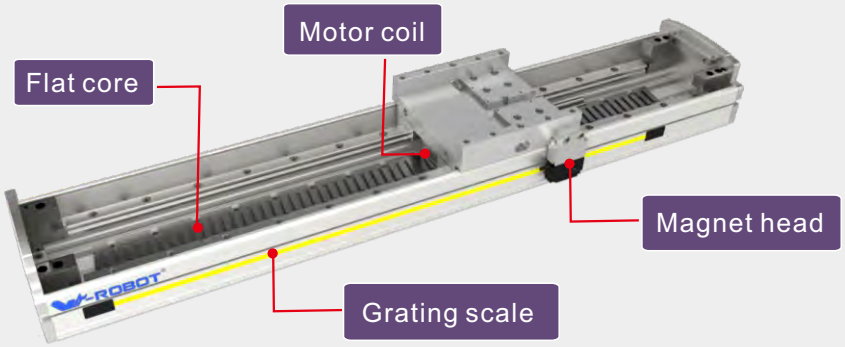

Supports multi-carrier operation

Supports "multi-carrier" operation that allows using 3 or more carriers on one robot. This "multi-carrier" operation is drastically expanding the current range of applications due to its effect in improving tact time and saving space.

Supports dual-drive

Sing dual-drive to simultaneously run 2 axes allows high speed conveyance over a wide area as well as conveying heavy payloads . Also can provide an optimal control system, such as torque support control or bi-axial positioning control.

W-ROBOT® Linear Drives

Linear Motor Configuration

Closed Linear Motor Model

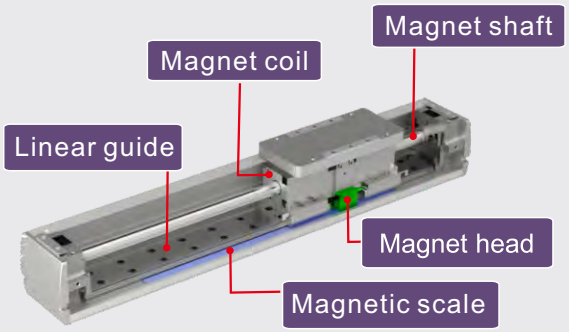

Closed tubular linear motor

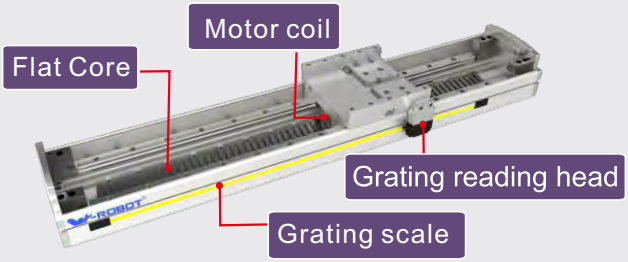

Flat core linear motor

Closed Linear Motor Model

Closed Tubular Linear Motor Model

LT8

LT14

LT17

Flat Iron Core Linear Motor Model

LC14

LC17

LC22

2LC14

Linear Motor

LMD-F14-T1

Maximum Stroke 3000mm
Body Width 140mm ·····255
Repeatability ±0.005

LMD-F17-T1

Maximum Stroke 3000mm
Body Width 170mm ·····257
Repeatability ±0.005

LMD-F22-T1

Maximum Stroke 3150mm
Body Width 220mm ·····259
Repeatability ±0.005

LMD-T20-T1

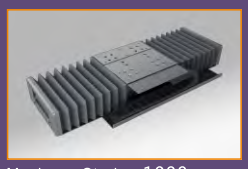

Maximum Stroke 1000mm
Body Width 200mm ·····261
Repeatability ±0.005

LMD-T28-T1

Maximum Stroke 1000mm
Body Width 280mm ·····263
Repeatability ±0.005

LMD-T35-T1

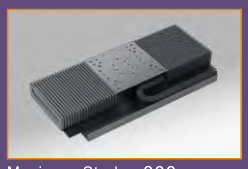

Maximum Stroke 800mm
Body Width 350mm ·····265
Repeatability ±0.005

LT8

Maximum Stroke 800mm
Body Width 80mm ·····267
Repeatability ±0.01mm

LT14

Maximum Stroke 800mm
Body Width 140mm·····269
Repeatability ±0.01mm

LT17

Maximum Stroke 800mm
Body Width 170mm·····271
Repeatability ±0.01mm

LC14

Maximum Stroke 2000mm
Body Width 140mm·····273
Repeatability ±0.01mm

LC17

Maximum Stroke 2000mm
Body Width 170mm·····275
Repeatability ±0.01mm

LC22

Maximum Stroke 2000mm
Body Width 220mm·····277
Repeatability ±0.01mm

2LC14

Maximum Stroke 2000mm
Body Width 140mm·····279
Repeatability ±0.01mm

LT76 linear motor (Closed Type)

Maximum Stroke Top:300 Bottom:300
Body Width 15KG ·····280
Repeatability ±0.01mm

LMDT linear motor (Closed Type)

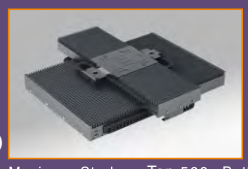

Maximum Stroke Top:500 Bottom:500
Rated payload 45KG ·····281
Repeatability ±0.075mm

LMD-F14-T1

W-ROBOT®
Linear Drives

Specification

Motor Type	TM
Repeatability(mm)	±0.005
Grating Resolution (mm)	±0.001
MaximumSpeed(mm/sec)	2500mm/s
Stroke(mm)	100-3000

Note: Repeatability depends on grating resolution.

Product model XXX=X-axss working stroke	Motor Type	Continuous Force(N)	Peak Current(N)	Peak Force(Arms)	Continuous Current(Arms)	Repeatability(mm)
LMD-F14-T1-TM6-XXX-T0-RH	TM6	120	210	6.2	3	±0.005

Guide for Model Selection

LMD - F14 - T 1 - TM6 - S300 - T 0 - RH+

Combination	
LMD	Linear Motor Drive

Base Style	
F	Semi enclosed
T	Fully-enclosed
14	Body width140

Platform Type	
T	Iron Core Motor

Axes number	
1	1-axis
2	2-axes

Motor Type
TM Series

Stroke(mm)
100-3000 (50-Interval)
Special stroke customized

Resolution	
T	10um
D	5um
G	2um
X	1um
N	0.4um
W	0.2um
Y	0.1um

Limit switch	
0	No
1	Inductive
2	Photoelectric switch

Cable Chain	
RH+	Horizontal right installation (Standard)
RH-	Horizontal right installation (Opposite)
LH+	Horizontal left installation (Standard)
LH-	Horizontal left installation (Opposite)
RV+	Vertical right installation (Standard)
RV-	Vertical right installation (Opposite)
LV+	Vertical left installation (Standard)
LV-	Vertical left installation (Opposite)

LMD-F14-T1

Unit (mm)

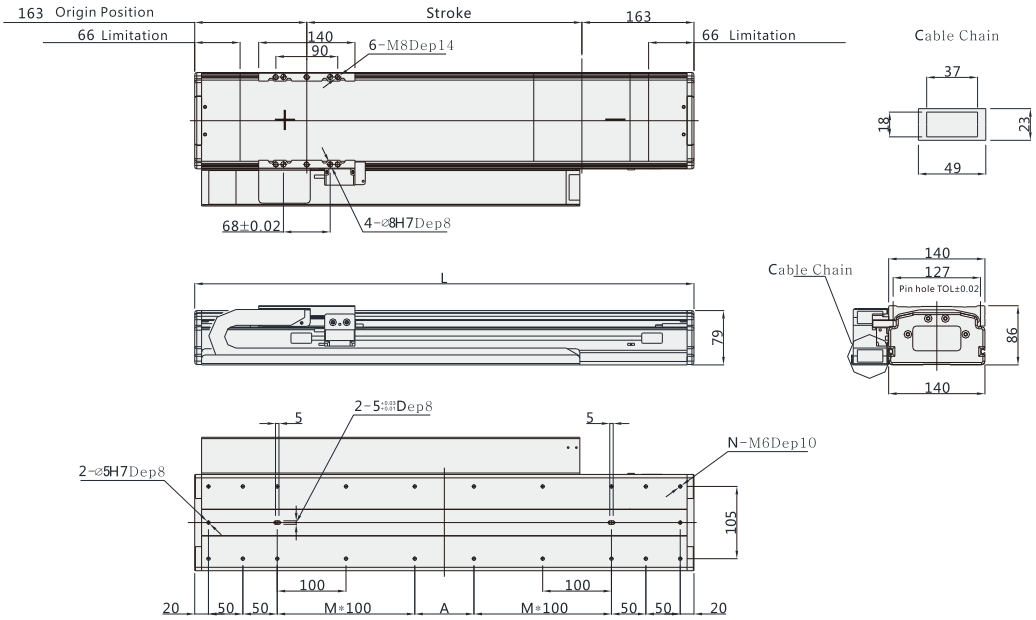

Note:Not including motor weight.

Working Stroke	100	150	200	250	300	350	400	450	500	550	600	650	700	750	800	850	900	950	1000	1050	1100	1150	1200	1250	1300	1350	1400	1450	1400	动子重量
L	426	476	526	576	626	676	726	776	826	876	926	976	1026	1076	1126	1176	1226	1276	1326	1376	1426	1476	1526	1576	1626	1676	1726	1776	1826	
M	0	0	1	1	1	1	2	2	2	2	3	3	3	3	4	4	4	4	5	5	5	5	6	6	6	6	7	7	7	
N	12	12	16	16	16	16	20	20	20	20	24	24	24	24	28	28	28	28	32	32	32	32	36	36	36	36	40	40	40	1.7kg
A	186	236	86	136	186	236	86	136	186	236	86	136	186	236	86	136	186	236	86	136	186	236	86	136	186	236	86	136	186	
Weight KG	7	8	9	10	11	12	13	14	15	16	17	18	19	20	21	22	23	24	25	26	27	28	29	30	31	32	33	34	35	

*In case special stroke please contact technical services.

LMD-F17-T1

W-ROBOT®
Linear Drives

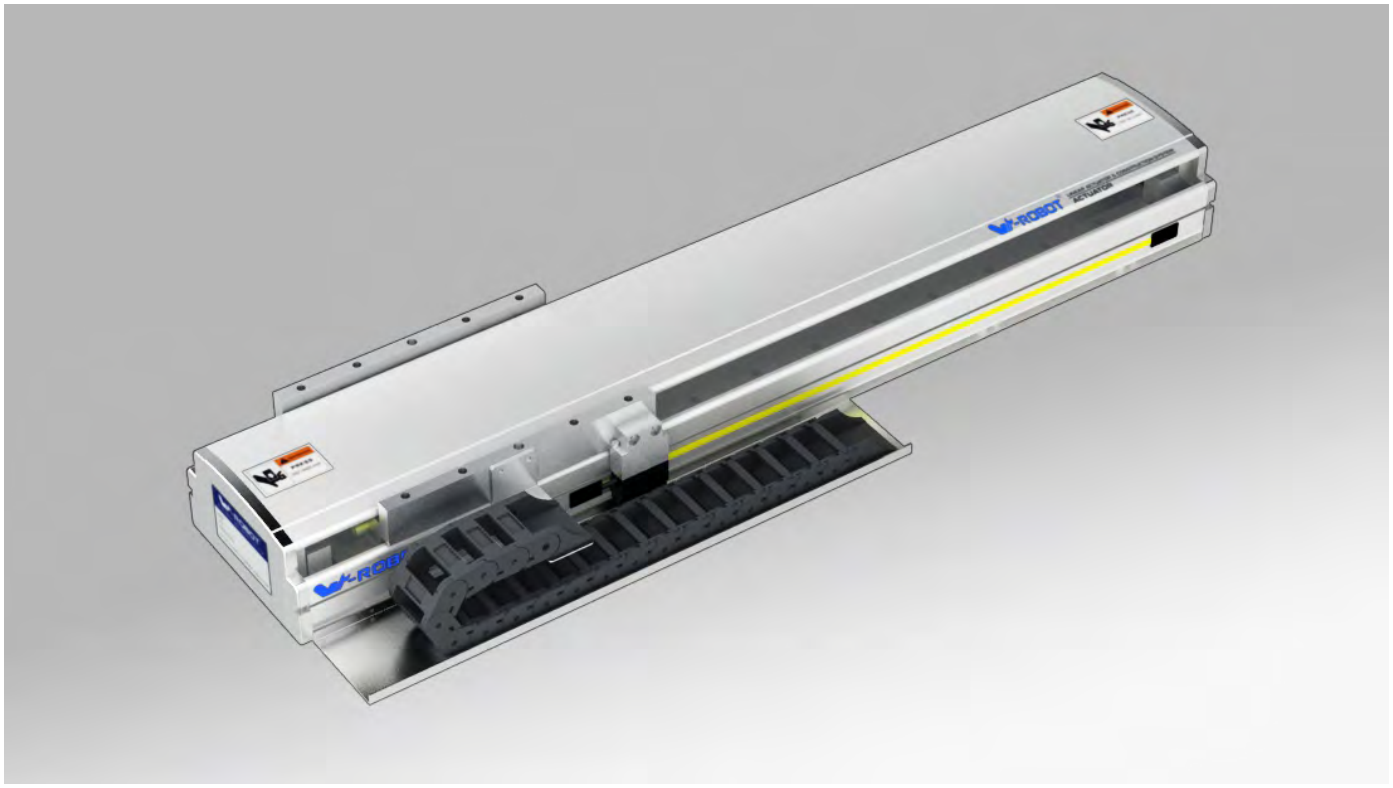

Specification

Motor Type	TM
Repeatability(mm)	±0.005
Grating Resolution (mm)	±0.001
MaximumSpeed(mm/sec)	3000mm/s
Stroke(mm)	100-3000

Note: Repeatability depends on grating resolution.

Product model XXX=X-axss working stroke	Motor Type	Continuous Force(N)	Peak Current(N)	Peak Force(Arms)	Continuous Current(Arms)	Repeatability(mm)
LMD-F17-T1-TM12-XXX-T0-RH	TM12	240	420	12.4	6	±0.005

Guide for Model Selection

LMD - F17 - T 1 - TM12 - S300 - T 0 - RH+

Combination	
LMD	Linear Motor Drive

Base Style	
F	Semi enclosed
T	Fully-enclosed
17	Body width170

Platform Type	
T	Iron Core Motor

Axes number	
1	1-axi
2	2-axes

Motor Type
TM Series

Stroke(mm)
100-3000(100-Interval)
Special stroke customized

Resolution	
T	10um
D	5um
G	2um
X	1um
N	0.4um
W	0.2um
Y	0.1um

Limit switch	
0	No
1	Inductive
2	Photoelectric switch

Cable Chain	
RH+	Horizontal right installation (Standard)
RH-	Horizontal right installation (Opposite)
LH+	Horizontal left installation (Standard)
LH-	Horizontal left installation (Opposite)
RV+	Vertical right installation (Standard)
RV-	Vertical right installation (Opposite)
LV+	Vertical left installation (Standard)
LV-	Vertical left installation (Opposite)

LMD-F17-T1

Unit (mm)

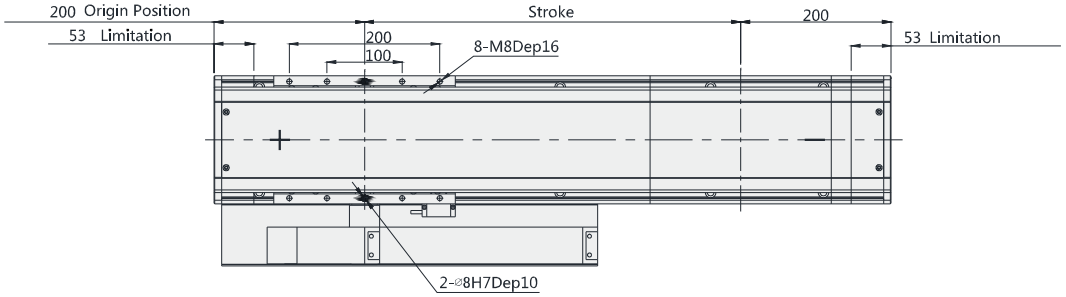

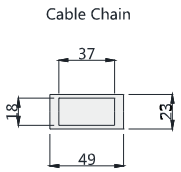

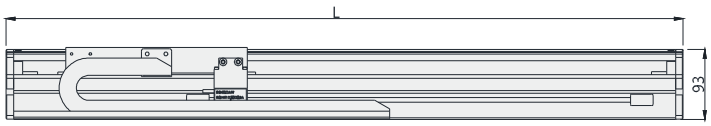

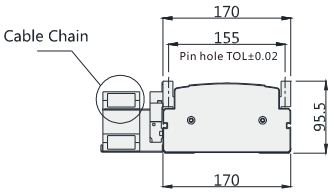

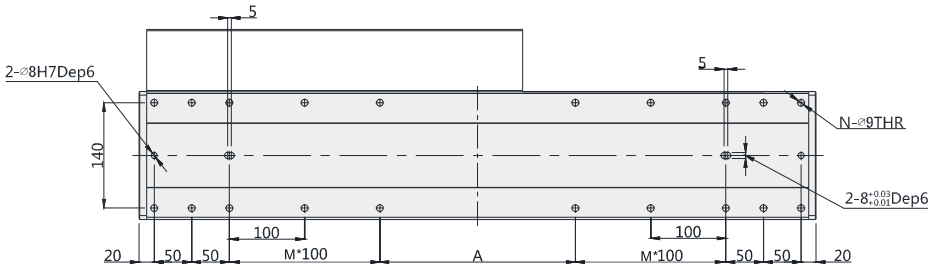

Note: Not including motor weight.

Working Stroke	100	200	300	400	500	600	700	800	900	1000	1100	1200	1300	1400	1500	1600	1700	1800	1900	2000	Rotor Weight
L	500	600	700	800	900	1000	1100	1200	1300	1400	1500	1600	1700	1800	1900	2000	2100	2200	2300	2400	3.8kg
M	0	1	1	2	2	3	3	4	4	5	5	6	6	7	7	8	8	9	9	10	
N	12	16	16	20	20	24	24	28	28	32	32	36	36	40	40	44	44	48	48	52	
A	260	160	260	160	260	160	260	160	260	160	260	160	260	160	260	160	260	160	260	160	
Weight KG	14	15.5	17	18.5	20	21.5	23	24.5	26	27.5	29	30.5	32	33.5	35	36.5	38	39.5	41	42.5	

*In case special stroke please contact technical services.

LMD-F22-T1

W-ROBOT® Linear Drives

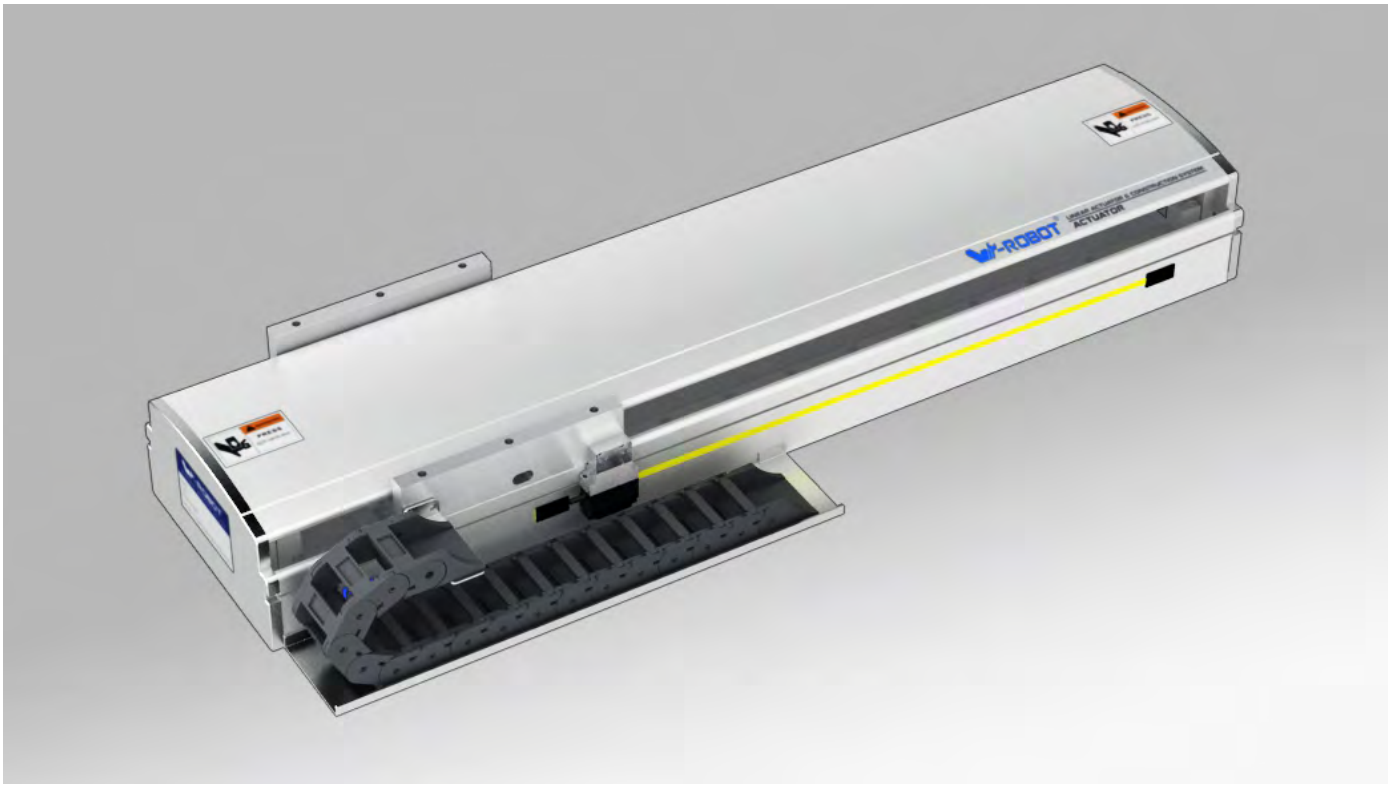

Specification

Motor Type	TL
Repeatability(mm)	±0.005
Grating Resolution (mm)	±0.001
MaximumSpeed(mm/sec)	3000mm/s
Stroke(mm)	150-3150

Note: Repeatability depends on grating resolution.

Product model XXX=X-axss working stroke	Motor Type	Continuous Force(N)	Peak Current(N)	Peak Force(Arms)	Continuous Current(Arms)	Repeatability(mm)
LMD-F22-T1-TL9-XXX-T0-RH	TL9	300	600	5	2.26	±0.005

Guide for Model Selection

LMD - F22 - T 1 - TL9 - S350 - T 0 - RH+

Combination	
LMD	Linear Motor Drive

Base Style	
F	Semi enclosed
T	Fully-enclosed
22	Body width220

Platform Type	
T	Iron Core Motor

Axes number	
1	1-axi
2	2-axes

Motor Type
TL Series

Stroke(mm)
150-3150(100-Interval)
Special stroke customized

Resolution	
T	10um
D	5um
G	2um
X	1um
N	0.4um
W	0.2um
Y	0.1um

Limit switch	
0	No
1	Inductive
2	Photoelectric switch

Cable Chain	
RH+	Horizontal right installation (Standard)
RH-	Horizontal right installation (Opposite)
LH+	Horizontal left installation (Standard)
LH-	Horizontal left installation (Opposite)
RV+	Vertical right installation (Standard)
RV-	Vertical right installation (Opposite)
LV+	Vertical left installation (Standard)
LV-	Vertical left installation (Opposite)

LMD-F22-T1

Unit (mm)

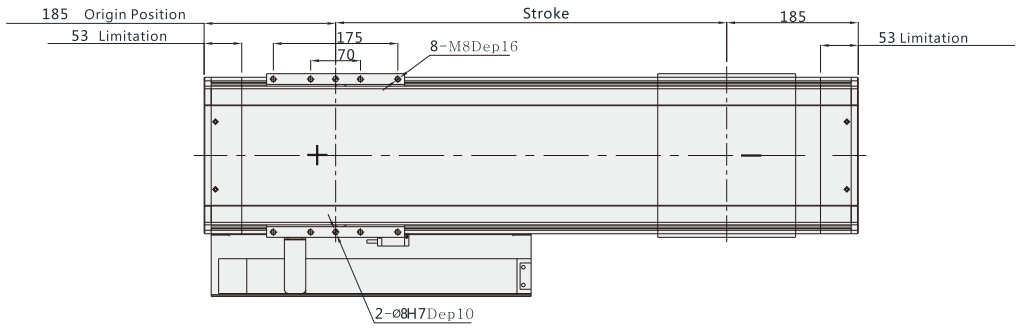

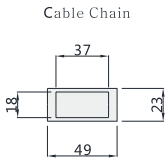

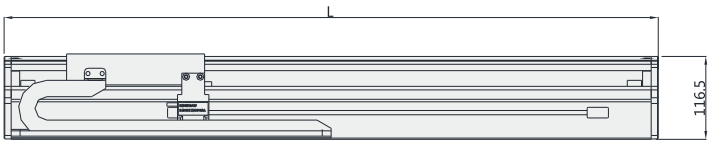

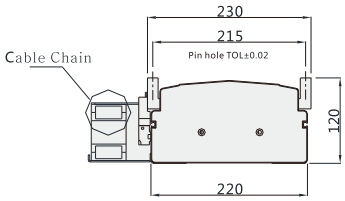

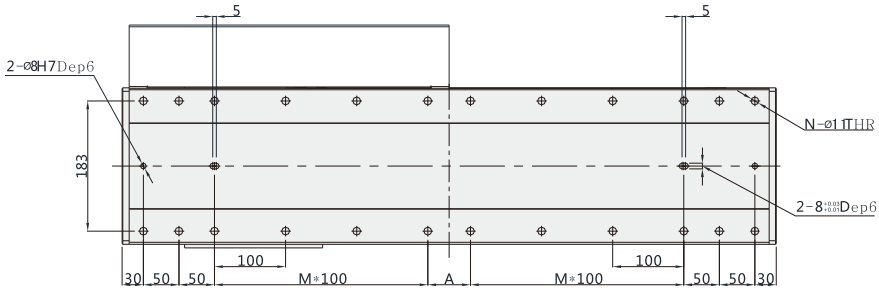

Note: Not including motor weight.

Working Stroke	150	250	350	450	550	650	750	850	950	1050	1150	1250	1350	1450	1550	1650	1750	1850	1950	2050	Rotor Weight
L	520	620	720	820	920	1020	1120	1220	1320	1420	1520	1620	1720	1820	1920	2020	2120	2220	2320	2420	5.8kg
M	1	1	2	2	3	3	4	4	5	5	6	6	7	7	8	8	9	9	10	10	
N	16	16	20	20	24	24	28	28	32	32	36	36	40	40	44	44	48	48	52	52	
A	60	160	60	160	60	160	60	160	60	160	60	160	60	160	60	160	60	160	60	160	
Weight KG	27.8	28.6	29.4	30.2	31	31.8	32.6	33.4	34.2	35	35.8	36.6	37.4	38.2	39	39.8	40.6	41.4	42.2	43	

*In case special stroke please contact technical services.

LMD-T20-T1

W-ROBOT®
Linear Drives

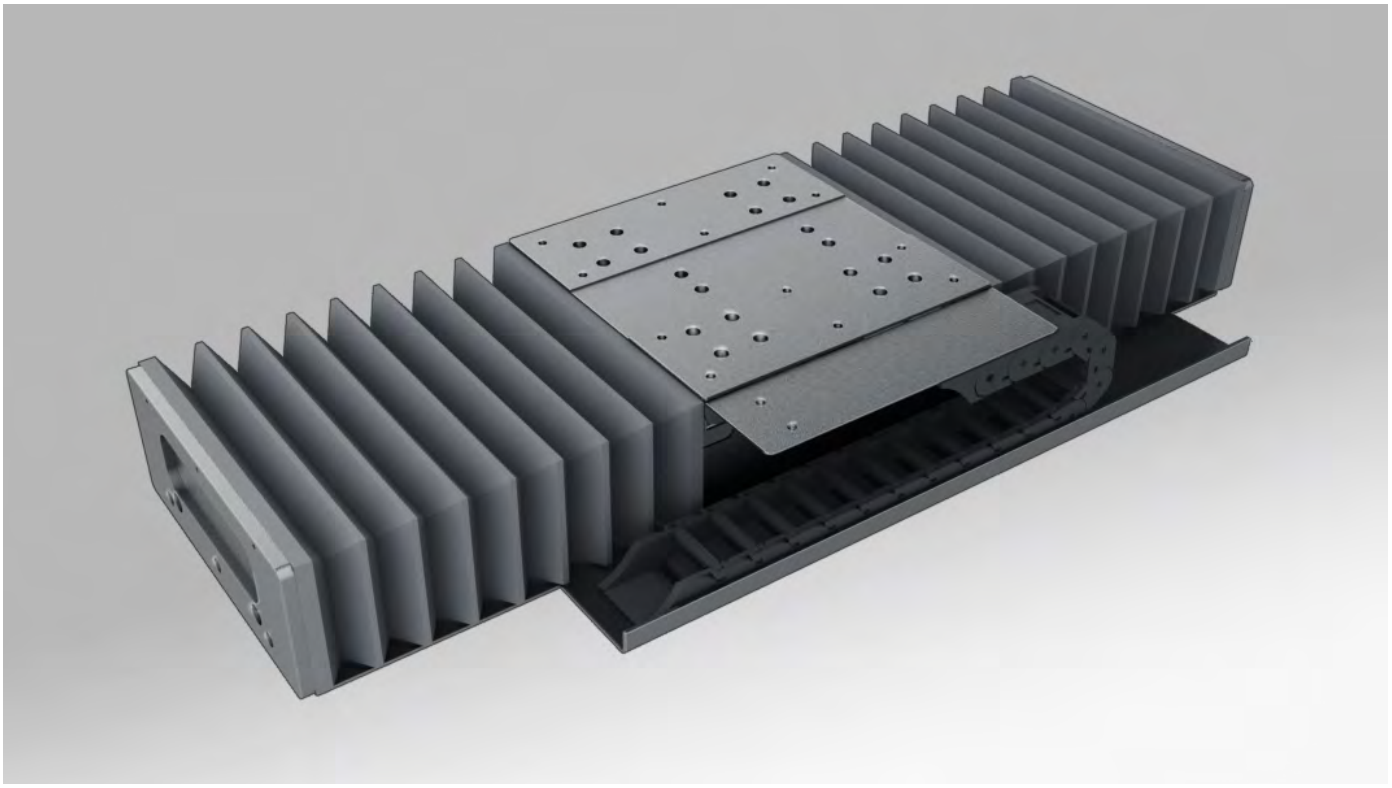

Specification

Motor Type	TM
Repeatability(mm)	±0.005
Grating Resolution (mm)	±0.001
MaximumSpeed(mm/sec)	2500mm/s
Stroke(mm)	100-1000

Note: Repeatability depends on grating resolution.

Product model XXX=X-axss working stroke	Motor Type	Continuous Force(N)	Peak Current(N)	Peak Force(Arms)	Continuous Current(Arms)	Repeatability(mm)
LMD-T20-T1-TM6-XXX-T0-RH	TM6	120	210	6.2	3	±0.005

Guide for Model Selection

LMD - T20 - T 1 - TM6 - S300 - T 0 - RH+

Combination	
LMD	Tecnotion

Base Style	
F	Semi enclosed
T	Fully-enclosed
20	Body width200

Platform Type	
T	Iron Core Motor

Axes number	
1	1-axis
2	2-axes

Motor Type
TM Series

Stroke(mm)
100-1000(100-Interval)
Special stroke customized

Resolution	
T	10um
D	5um
G	2um
X	1um
N	0.4um
W	0.2um
Y	0.1um

Limit switch	
0	No
1	Inductive
2	Photoelectric switch

Cable Chain	
RH+	Horizontal right installation (Standard)
RH-	Horizontal right installation (Opposite)
LH+	Horizontal left installation (Standard)
LH-	Horizontal left installation (Opposite)
RV+	Vertical right installation (Standard)
RV-	Vertical right installation (Opposite)
LV+	Vertical left installation (Standard)
LV-	Vertical left installation (Opposite)

LMD-T20-T1

Unit (mm)

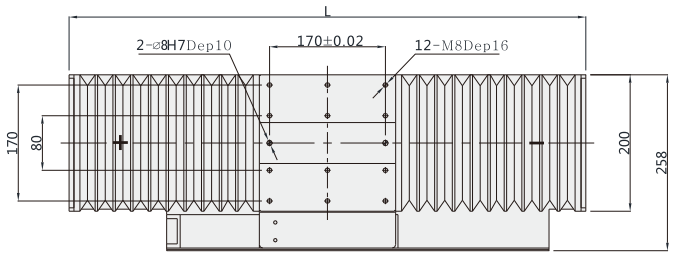

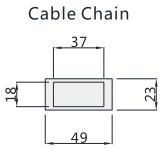

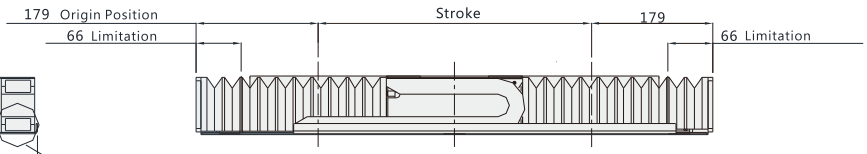

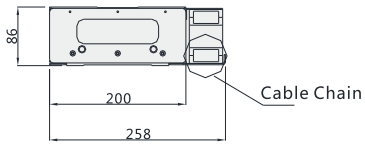

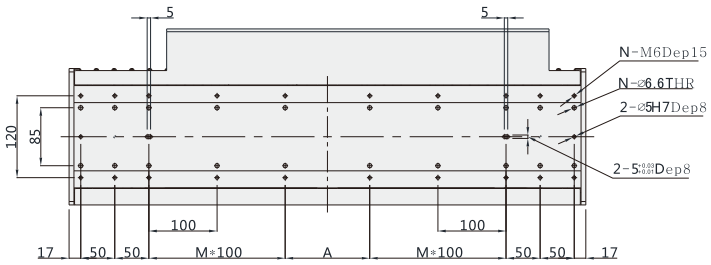

Note: Not including motor weight.

Working Stroke	100	150	200	250	300	350	400	450	500	550	600	650	700	750	800	850	900	950	1000	Rotor Weight
L	458	508	558	608	658	708	758	808	858	908	958	1008	1058	1108	1158	1208	1258	1308	1358	3kg
M	0	1	1	1	1	2	2	2	2	3	3	3	3	4	4	4	4	5	5	
N	12	16	16	16	16	20	20	20	20	24	24	24	24	28	28	28	28	32	32	
A	224	74	124	174	224	74	124	174	224	74	124	174	224	74	124	174	224	74	124	
Weight KG	12	14	16	18	20	22	24	26	28	30	32	34	36	38	40	42	44	46	48	

*In case special stroke please contact technical services.

LMD-T28-T1

W-ROBOT®
Linear Drives

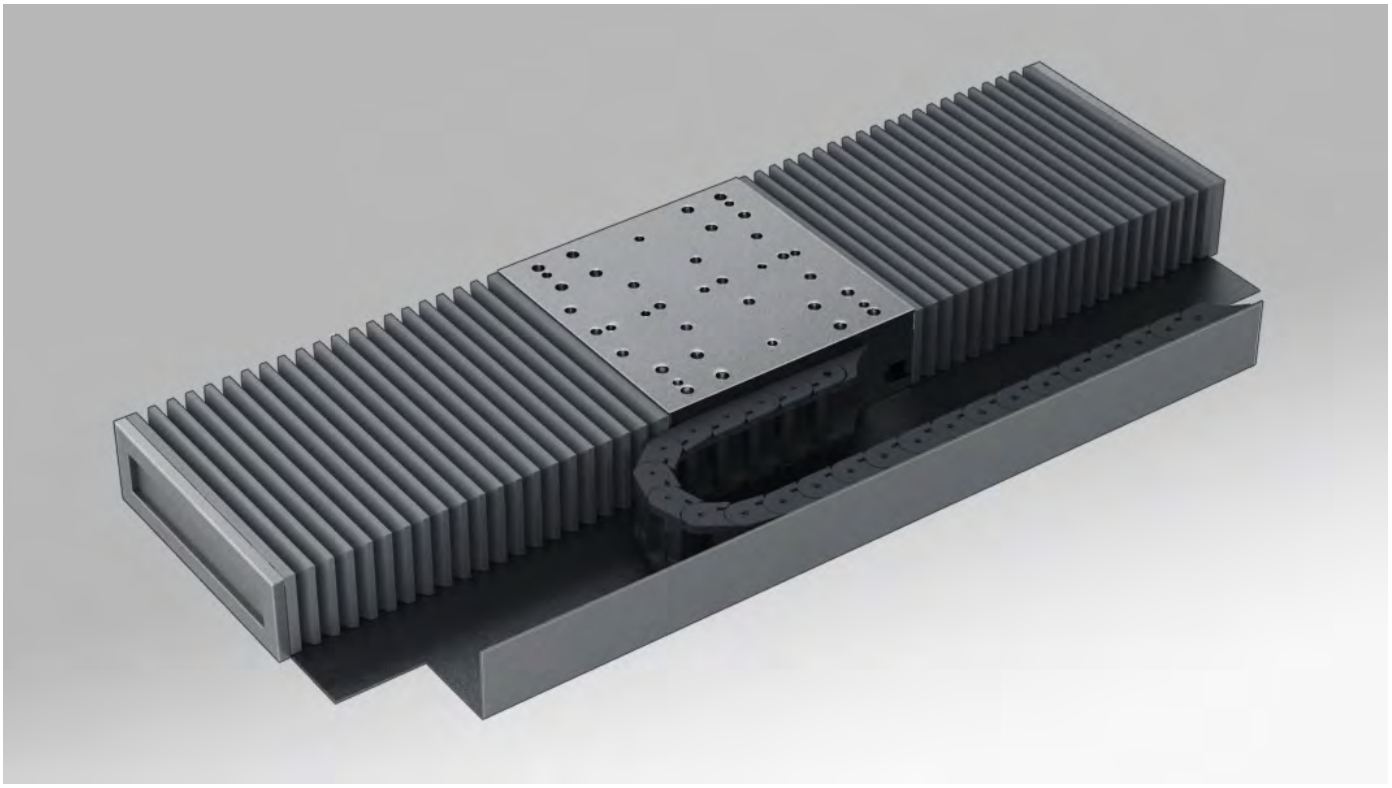

Specification

Motor Type	TB
Repeatability(mm)	±0.005
Grating Resolution (mm)	±0.001
MaximumSpeed(mm/sec)	3000mm/s
Stroke(mm)	100-1000

Note: Repeatability depends on grating resolution.

Product model XXX=X-axss working stroke	Motor Type	Continuous Force(N)	Peak Current(N)	Peak Force(Arms)	Continuous Current(Arms)	Repeatability(mm)
LMD-T28-T1-TB12-XXX-T0-RH	TB12	760	1600	10	4.1	±0.005

Guide for Model Selection

LMD - T28 - T 1 - TB12 - S300 - T 0 - RH+

Combination	
LMD	Linear Motor Drive

Base Style	
F	Semi enclosed
T	Fully-enclosed
28	Body width280

Platform Type	
T	Iron Core Motor

Axes number	
1	1-axis
2	2-axes

Motor Type
TB Series

Stroke(mm)
100-1000(100-Interval)
Special stroke customized

Resolution	
T	10um
D	5um
G	2um
X	1um
N	0.4um
W	0.2um
Y	0.1um

Limit switch	
0	No
1	Inductive
2	Photoelectric switch

Cable Chain	
RH+	Horizontal right installation (Standard)
RH-	Horizontal right installation (Opposite)
LH+	Horizontal left installation (Standard)
LH-	Horizontal left installation (Opposite)
RV+	Vertical right installation (Standard)
RV-	Vertical right installation (Opposite)
LV+	Vertical left installation (Standard)
LV-	Vertical left installation (Opposite)

LMD-T28-T1

Unit (mm)

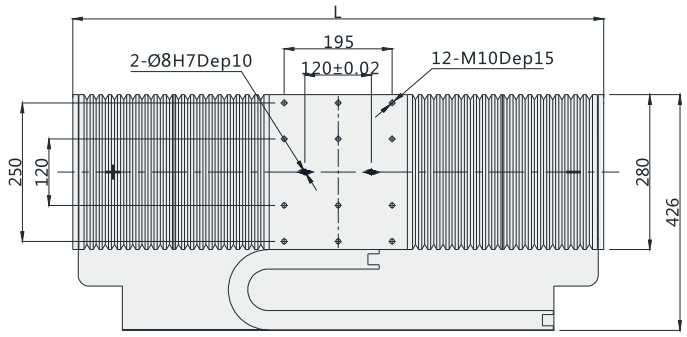

Cable Chain

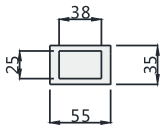

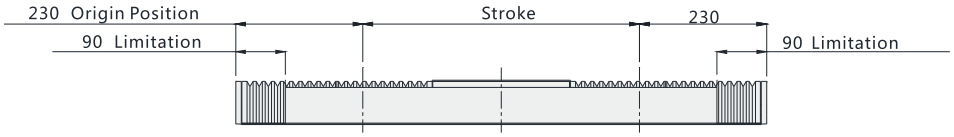

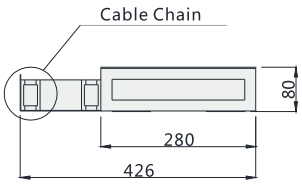

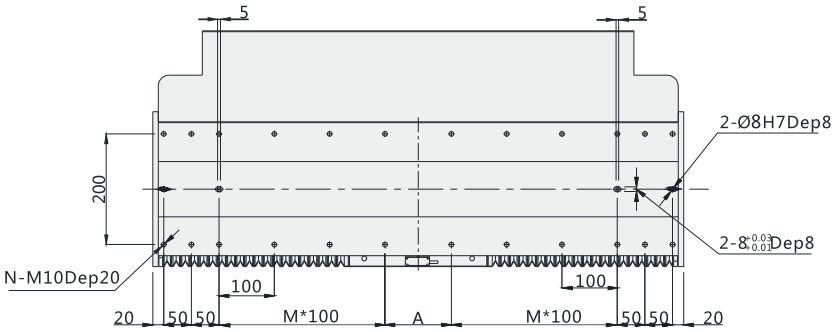

Note: Not including motor weight.

Working Stroke	100	200	300	400	500	600	700	800	900	1000	Rotor Weight
L	560	660	760	860	960	1060	1160	1260	1360	1460	12.2kg
M	1	1	2	2	3	3	4	4	5	5	
N	16	16	20	20	24	24	28	28	32	32	
A	120	220	120	220	120	220	120	220	120	220	
Weight KG	50	55	60	65	70	75	80	85	90	95	

*In case special stroke please contact technical services.

LMD-T35-T1

W-ROBOT®
Linear Drives

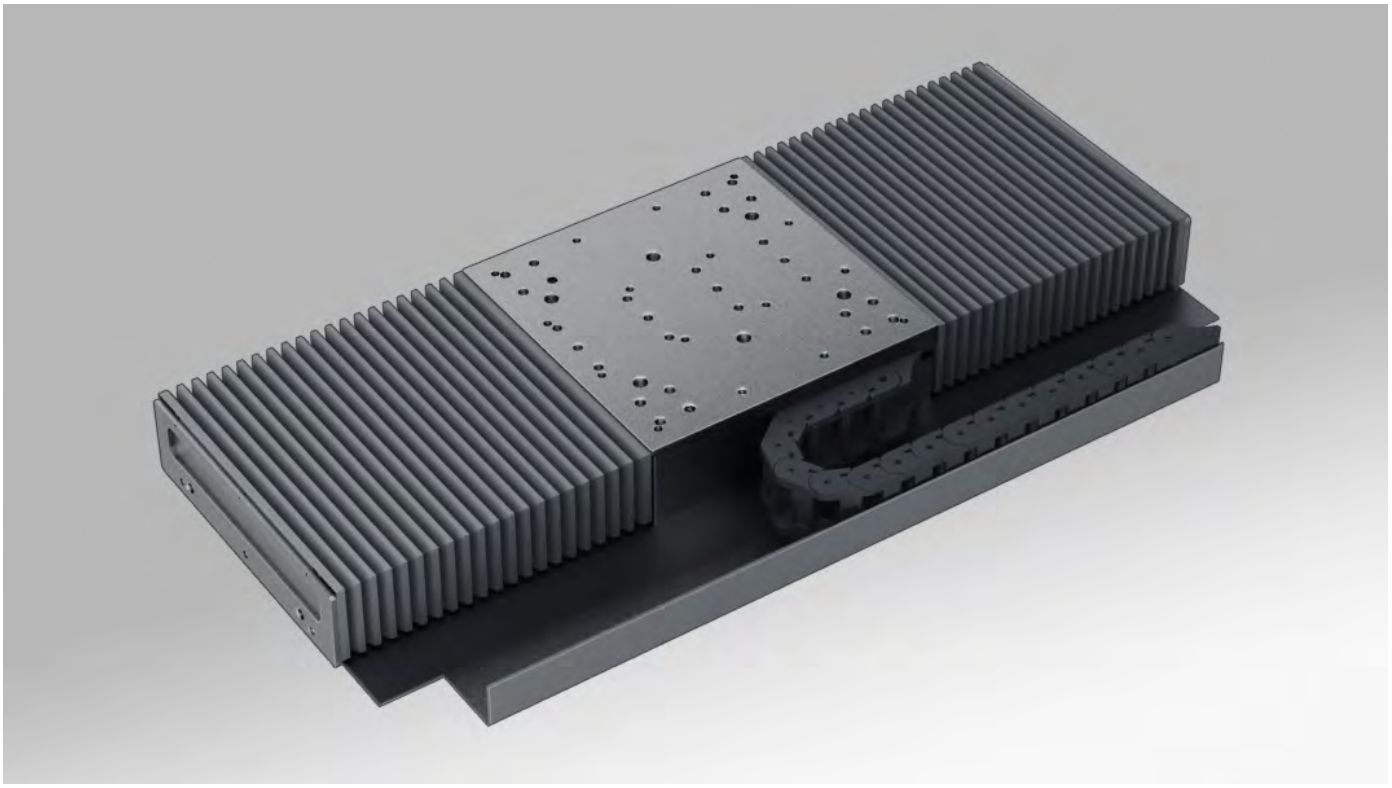

Specification

Motor Type	TBW
Repeatability(mm)	±0.005
Grating Resolution (mm)	±0.001
MaximumSpeed(mm/sec)	3000mm/s
Stroke(mm)	100-800

Note: Repeatability depends on grating resolution.

Product model XXX=X-axss working stroke	Motor Type	Continuous Force(N)	Peak Current(N)	Peak Force(Arms)	Continuous Current(Arms)	Repeatability(mm)
LMD-T35-T1-TBW18-XXX-T0-RH	TBW18	1140	2400	15.0	6.5	±0.005

Guide for Model Selection

LMD - T35 - T 1 - TBW18 - S300 - T 0 - RH+

Combination	
LMD	Linear Motor Drive

Base Style	
F	Semi enclosed
T	Fully-enclosed
35	Body width350

Platform Type	
T	Iron Core Motor

Axes number	
1	1-axis
2	2-axes

Motor Type
TBW Series

Stroke(mm)
100-800 (100-Interval)
Special stroke customized

Resolution	
T	10um
D	5um
G	2um
X	1um
N	0.4um
W	0.2um
Y	0.1um

Limit switch	
0	No
1	Inductive
2	Photoelectric switch

Cable Chain	
RH+	Horizontal right installation (Standard)
RH-	Horizontal right installation (Opposite)
LH+	Horizontal left installation (Standard)
LH-	Horizontal left installation (Opposite)
RV+	Vertical right installation (Standard)
RV-	Vertical right installation (Opposite)
LV+	Vertical left installation (Standard)
LV-	Vertical left installation (Opposite)

LMD-T35-T1

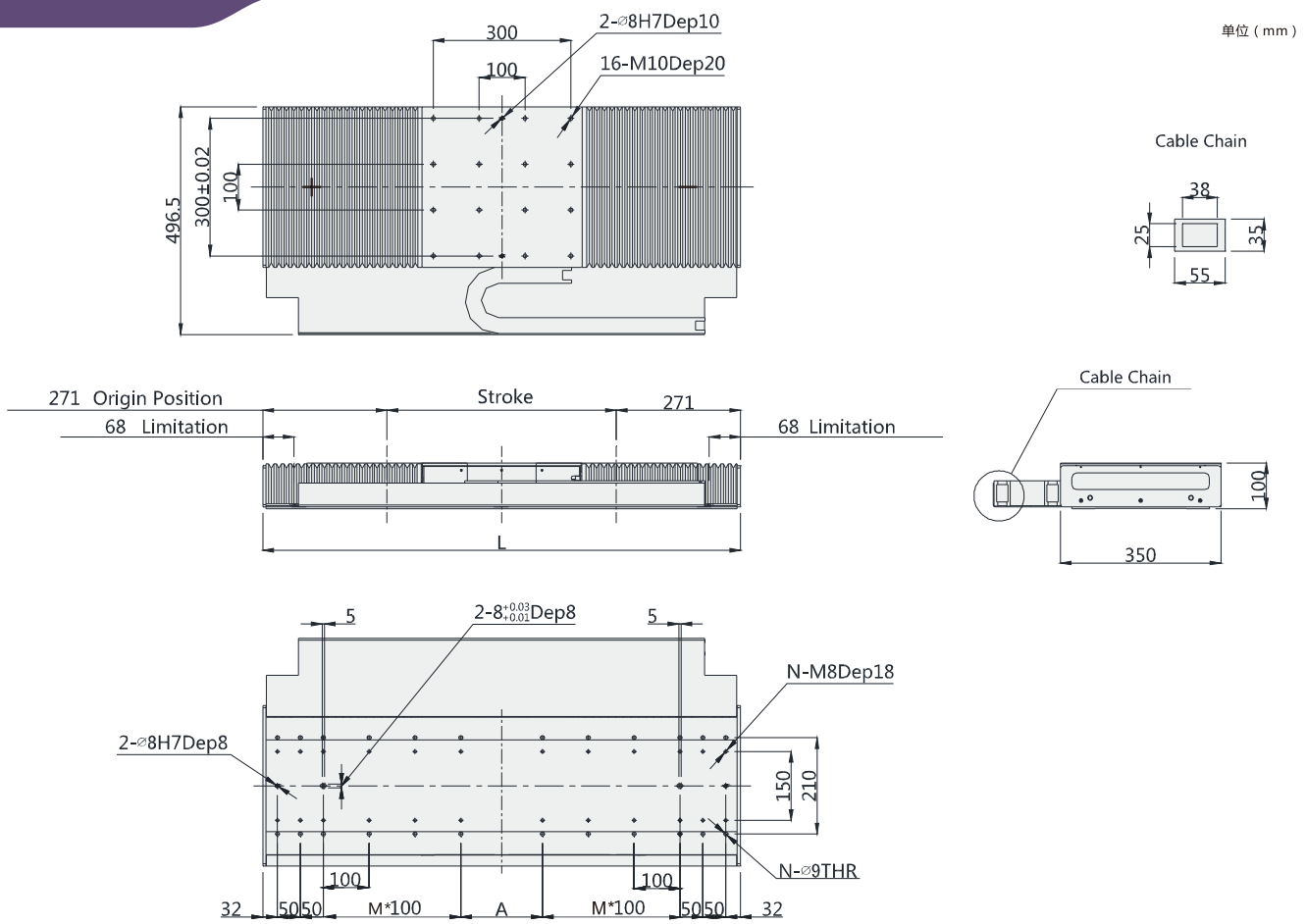

Note: Not including motor weight.

Working Stroke	100	200	300	400	500	600	700	800	Rotor Weight
L	642	742	842	942	1042	1142	1242	1342	32.3kg
M	1	2	2	3	3	4	4	5	
N	16	20	20	24	24	28	28	32	
A	178	78	178	78	178	78	178	78	
Weight KG	66	72	78	84	90	96	102	108	

*In case special stroke please contact technical services.

LT8

W-ROBOT®
Linear Drives

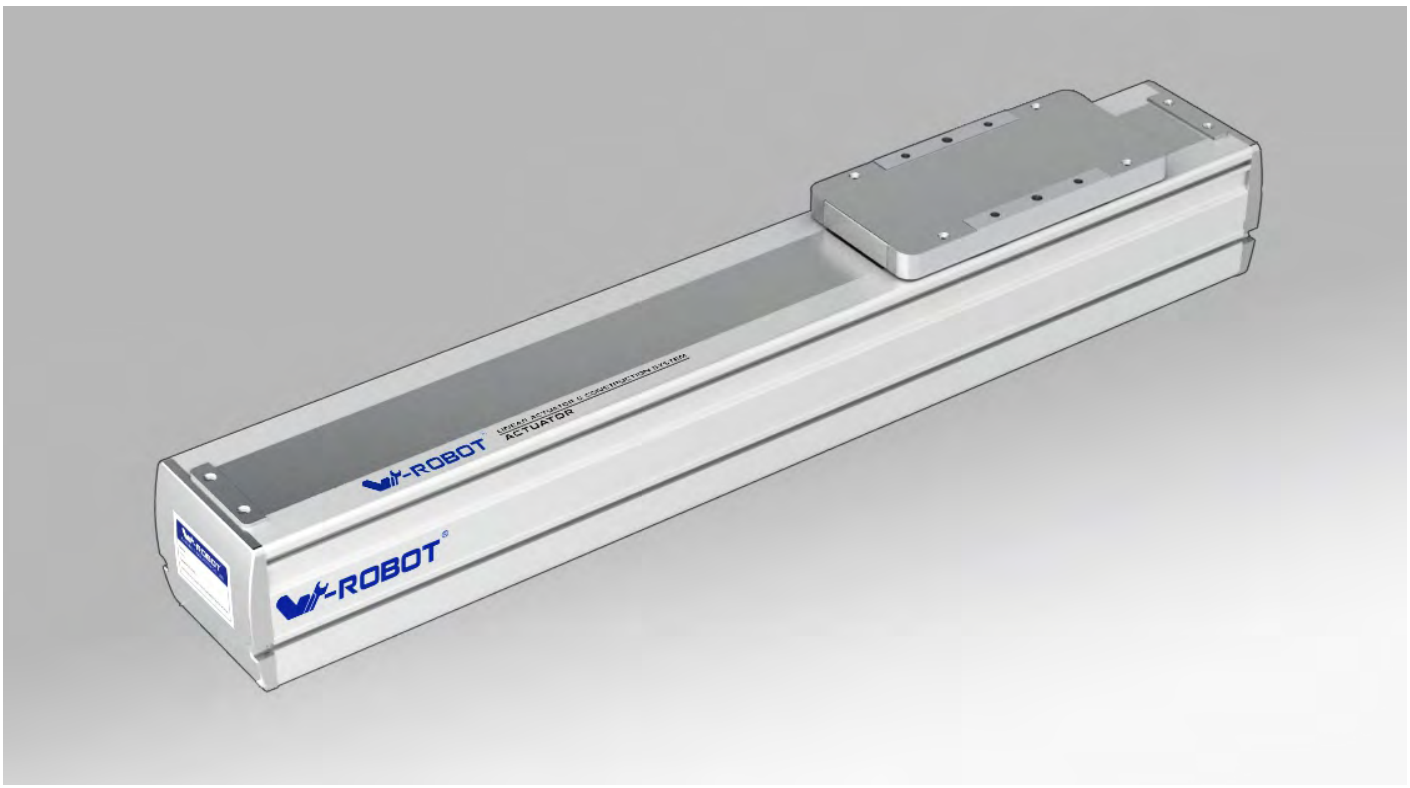

Cable set installation

LV+

LV-

LH+

LH-

Guide for Model Selection

LT 8 - T16 - S500 - R1 1 -

Qty.of the active cell	
None	Single active cell
2	Double active cells

Motor Type	
LT	Tubular and iron core linear motion

Body Width	
8	Body Width 80mm

Model of active cell	
T16	Tubular and iron core motor model

Stroke
100-800

Resolution of the magnetic read head	
R1	1um
R2	2um
R5	5um
R10	10um

Limit Sensor	
0	None
1	Photoelectric switch

Cable Chain	
LV+	Vertical left installation (Standard)
LV-	Vertical left installation (Opposite)
LH+	Horizontal left installation (Standard)
LH-	Horizontal left installation (Opposite)
None	Without

LT8

Unit (mm)

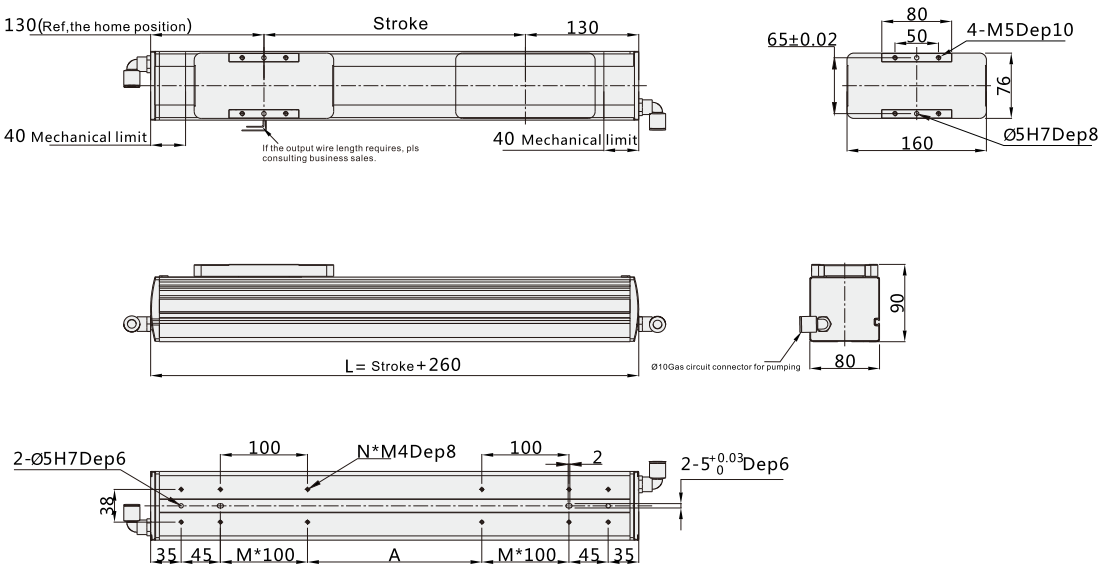

Note: Not including motor weight.

Stroke	100	150	200	250	300	350	400	450	500	550	600	650	700	750	800
L	360	410	460	510	560	610	660	710	760	810	860	910	960	1010	1060
M	1	1	1	1	1	2	2	2	2	3	3	3	3	4	4
N	10	12	12	12	12	16	16	16	16	20	20	20	20	24	24
A	0	50	100	150	200	50	100	150	200	50	100	150	200	50	100
Weight KG	5.2	5.7	6.2	6.7	7.2	7.7	8.2	8.7	9.2	9.7	10.2	10.7	11.2	11.7	12.2

*In case special stroke please contact technical services.

Standard configuration	Specifications
Continuous Force	26
Peak Current	78
Continuous Current	1.4
Peak Force (A)	4.2
Max. acceleration (m/s/s)	20
Maximum Speed (m/s)	1.5
Dividing rule (um)	Magnetic type: resolution1
Repeatability (mm)	0.01
Position accuracy (mm)	0.03 Exclude error compensation
Linear Guide	42x9.5-1

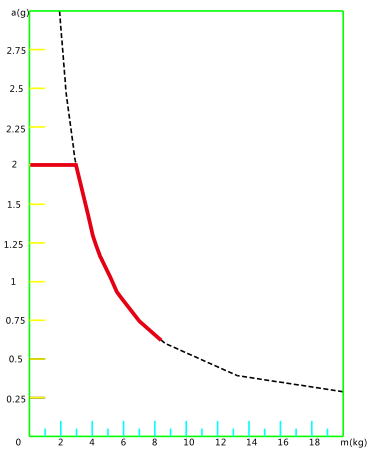

LT14

W-ROBOT® Linear Drives

Cable sets installation

LV+

LV-

LH+

LH-

Guide for Model Selection

LT 14 - T25 - S500 - R1 1 -

Single active cell	
None	Single active cell
2	Double active cell

Tubular and iron core linear motion	
LT	Tubular and iron core linear motion

Body Width	
14	Body Width 140mm

Model of active cell	
T25	Tubular and iron core linear motor model

Stroke
100-800

Resolution of the magnetic read head	
R1	1um
R2	2um
R5	5um
R10	10um

Limit Sensor	
0	None
1	Optoelectronic switch

Cable Chain	
LV+	Vertical left installation (Standard)
LV-	Vertical left installation (Opposite)
LH+	Horizontal left installation (Standard)
LH-	Horizontal left installation (Opposite)
None	Without

LT14

Unit (mm)

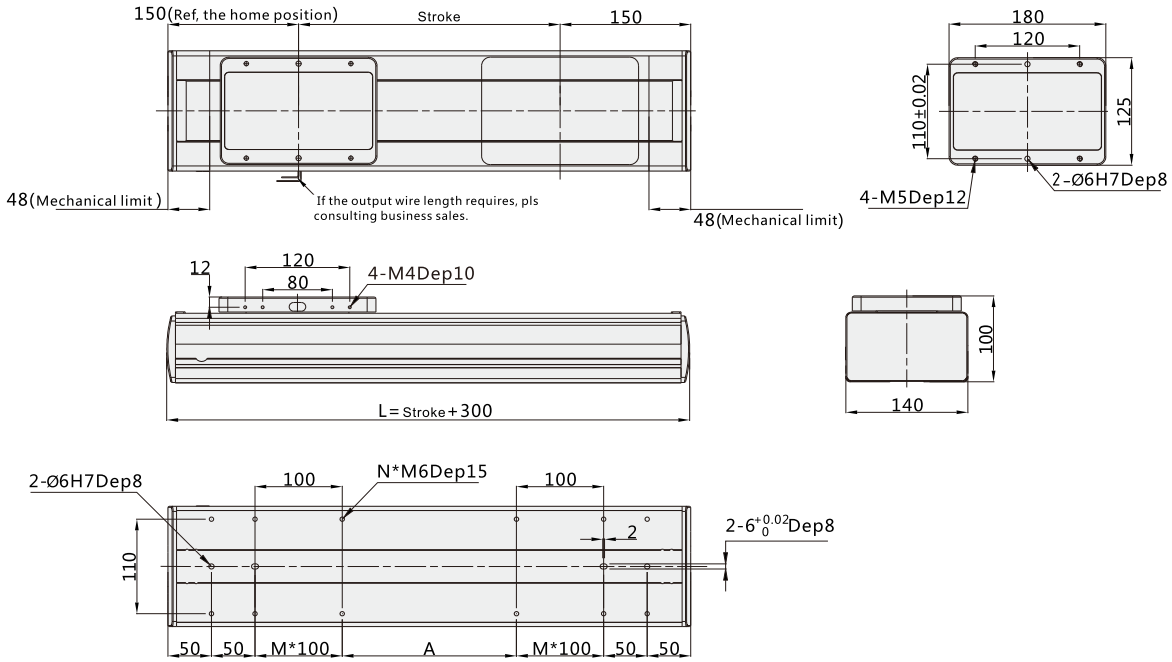

Note: Not including motor weight.

Stroke	100	150	200	250	300	350	400	450	500	550	600	650	700	750	800	850	900	950	1000	1050	1100
L	400	450	500	550	600	650	700	750	800	850	900	950	1000	1050	1100	1150	1200	1250	1300	1350	1400
M	1	1	1	1	1	2	2	2	2	3	3	3	3	4	4	4	4	5	5	5	5
N	10	12	12	12	12	16	16	16	16	20	20	20	20	24	24	24	24	28	28	28	28
A	0	50	100	150	200	50	100	150	200	50	100	150	200	50	100	150	200	50	100	150	200
Weight KG	10.1	10.6	11.1	11.6	12.1	12.6	13.1	13.6	14.1	14.6	15.1	15.6	16.1	16.6	17.1	17.6	18.1	18.6	19.1	19.6	20.1

*In case special stroke please contact technical services.

Standard configuration	Specifications
Continuous Force (N)	67.5
Peak Current (N)	202.5
Continuous Current (A)	2.5
Peak Force (A)	7.5
Max. acceleration (m/s/s)	30
Maximum Speed (m/s)	2
Dividing rule (um)	Magnetic type: resolution1
Repeatability (mm)	0.01
Position accuracy (mm)	0.03(After error compensation)
Linear guide rail	15x12.5-2

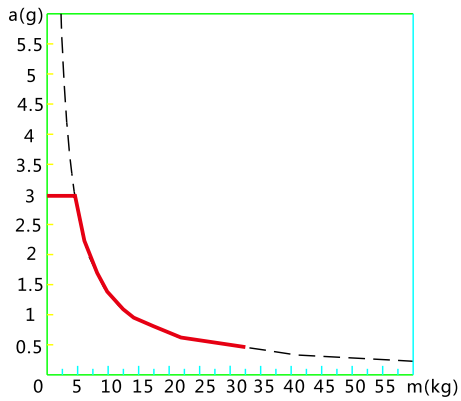

LT17

W-ROBOT®
Linear Drives

Cable set installations

LV+

LV-

LH+

LH-

Guide for Model Selection

LT 17 - T32 - S500 - R1 1 -

Qty. single active cell	
None	Single active cell
2	Double active cell

Motor Type	
LT	Tubular and iron core linear motion

Body Width	
17	Body Width170mm

Model of active cell	
T32	Tubular and iron core motor model

Stroke
100-800

Resolution of the magnetic read head	
R1	1um
R2	2um
R5	5um
R10	10um

Limit Sensor	
0	None
1	Photoelectric switch

Cable Chain	
LV+	Vertical left installation (Standard)
LV-	Vertical left installation (Opposite)
LH+	Horizontal left installation (Standard)
LH-	Horizontal left installation (Opposite)
None	Without

LT17

Unit (mm)

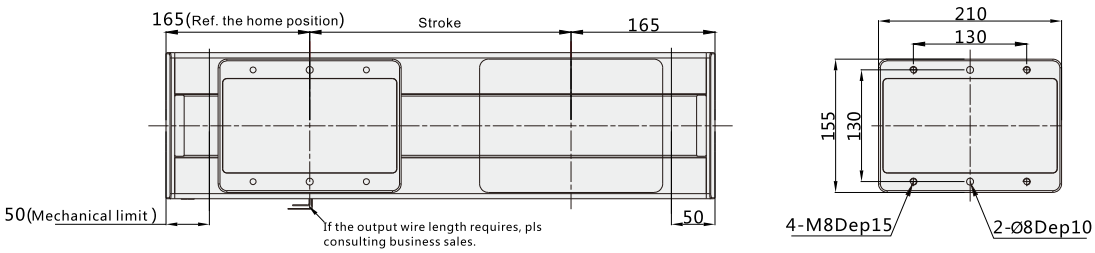

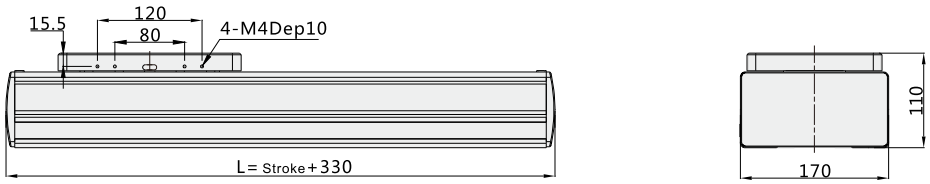

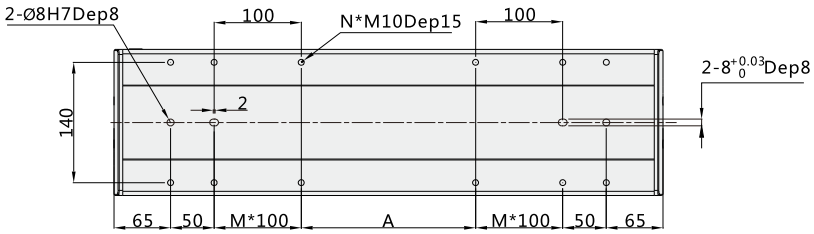

Note: Not including motor weight.

Stroke	100	150	200	250	300	350	400	450	500	550	600	650	700	750	800	850	900	950	1000	1050	1100
L	430	480	530	580	630	680	730	780	830	880	930	980	1030	1080	1130	1180	1230	1280	1330	1380	1430
M	1	1	1	1	1	2	2	2	2	3	3	3	3	4	4	4	4	5	5	5	5
N	10	12	12	12	12	16	16	16	16	20	20	20	20	24	24	24	24	28	28	28	28
A	0	50	100	150	200	50	100	150	200	50	100	150	200	50	100	150	200	50	100	150	200
Weight KG	11.9	12.5	13.1	13.7	14.3	14.9	15.5	16.1	16.7	17.3	17.9	18.5	19.1	19.7	20.3	20.9	21.5	22.1	22.7	23.3	23.9

*In case special stroke please contact technical services.

Standard configuration	Specifications
Continuous Force (N)	420
Peak Current (N)	140
Continuous Current (A)	2.5
Peak Force (A)	7.5
Max. acceleration (m/s/s)	30
Maximum Speed (m/s)	2
Dividing rule (um)	Magnetic type: resolution1
Repeatability (mm)	0.01
Position accuracy (mm)	0.03(After error compensation)
Linear guide rail	15x12.5-2

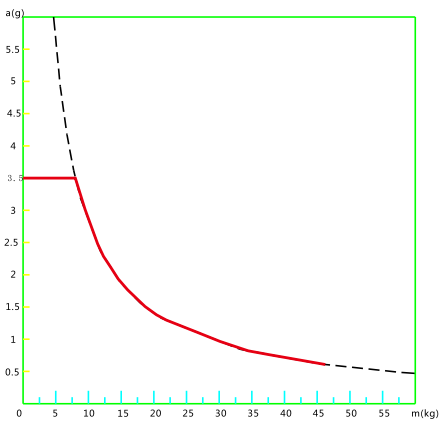

LC14

W-ROBOT® Linear Drives

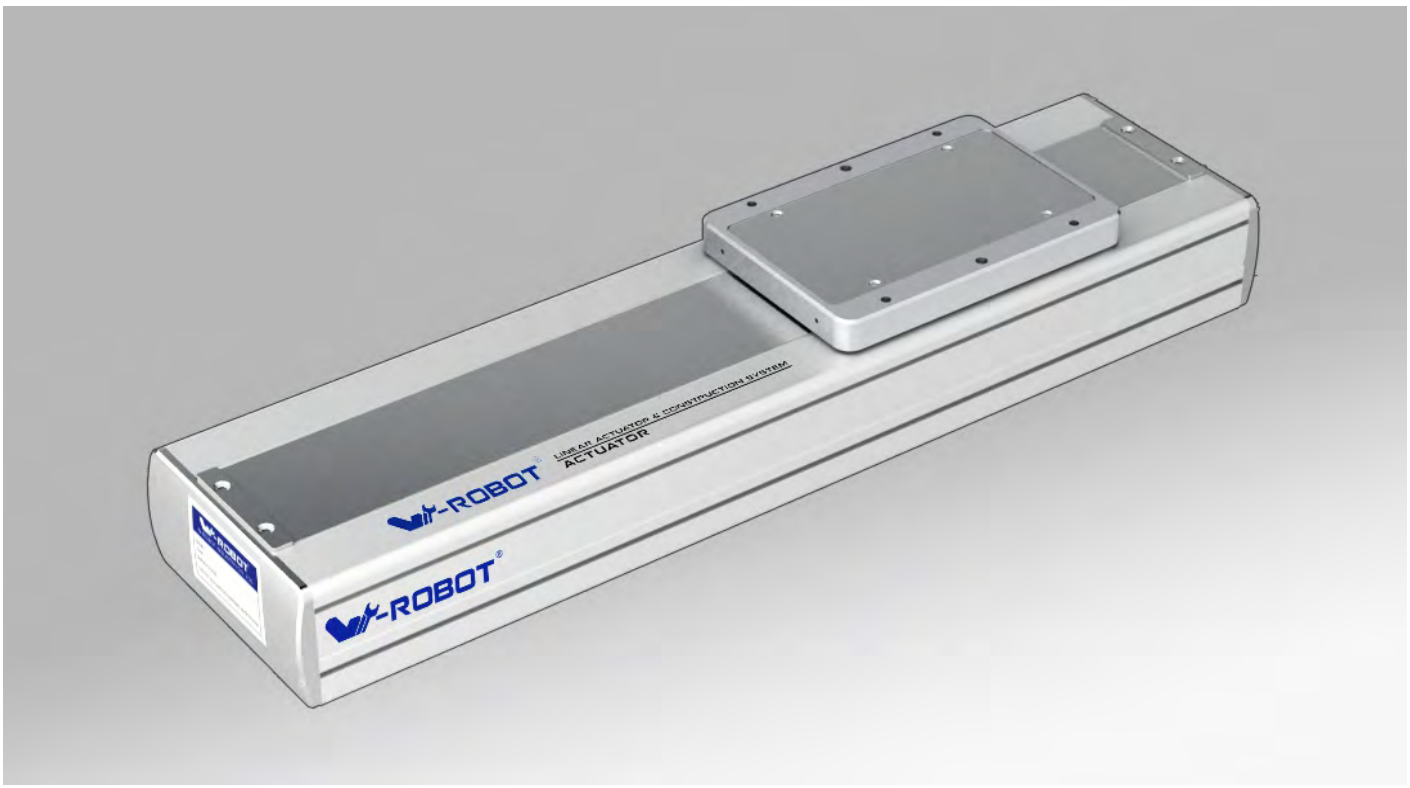

Cable set installation

LV+

LV-

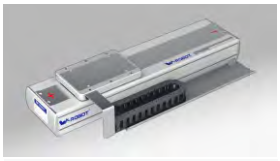

LH+

LH-

Guide for Model Selection

LC 14 - W6 - S500 - R1 1 -

Qty. single active cell	
None	Single active cell
2	Double active cell

Motor Type	
LC	Tubular and iron core linear motion

Body Width	
14	Body Width 140

Model of the active cell	
W6	Tubular and iron core motor model

Stroke
100-2000

Resolution of the magnetic read head	
R1	1um
R2	2um
R5	5um
R10	10um

Limit Sensor	
0	None
1	Photoelectric switch

Cable Chain	
LV+	Vertical left installation (Standard)
LV-	Vertical left installation (Opposite)
LH+	Horizontal left installation (Standard)
LH-	Horizontal left installation (Opposite)
None	Without

LC14

Unit (mm)

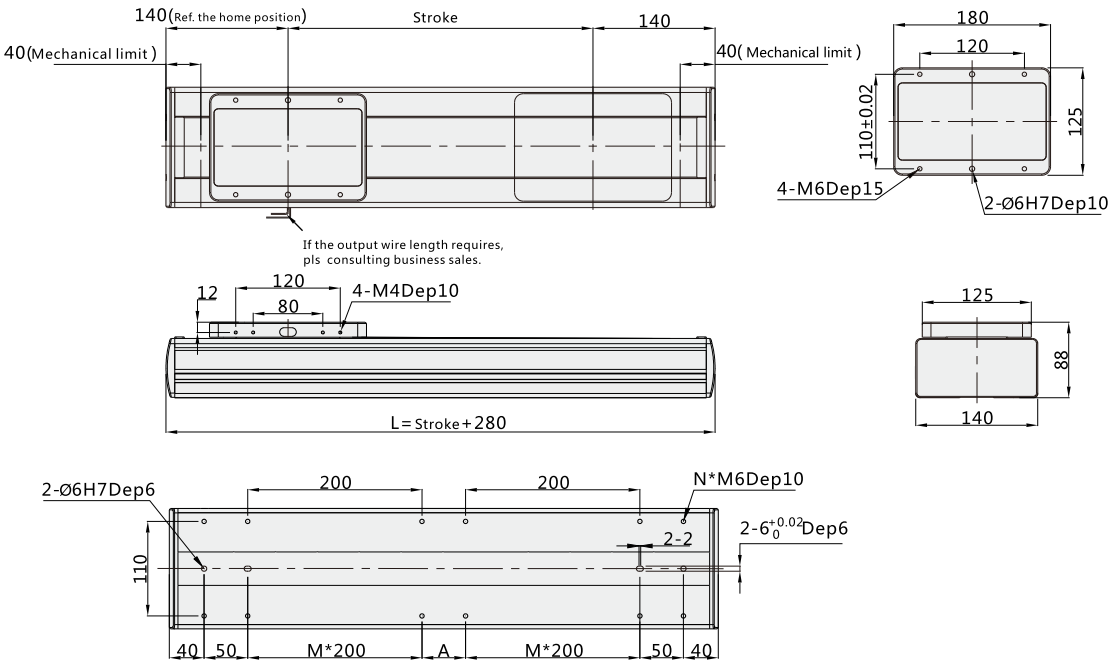

Note: Not including motor weight.

Stroke	100	150	200	250	300	350	400	450	500	550	600	650	700	750	800	850	900	950	1000	1050	1100	1150	1200	1250	1300	1350	1400	1450	1500	1550	1600	1650	1700	1750	1800	1850	1900	1950	2000
L	380	430	480	530	580	630	680	730	780	830	880	930	980	1030	1080	1130	1180	1230	1280	1330	1380	1430	1480	1530	1580	1630	1680	1730	1780	1830	1880	1930	1980	2030	2080	2130	2180	2230	2280
M	0	0	0	0	1	1	1	1	1	1	1	1	2	2	2	2	2	2	2	2	3	3	3	3	3	3	3	3	4	4	4	4	4	4	4	4	5	5	5
N	8	8	8	8	10	12	12	12	12	12	12	12	14	16	16	16	16	16	16	16	18	20	20	20	20	20	20	20	22	24	24	24	24	24	24	24	26	28	28
A	200	250	300	350	0	50	100	150	200	250	300	350	0	50	100	150	200	250	300	350	0	50	100	150	200	250	300	350	0	50	100	150	200	250	300	350	0	50	100
Weight KG	10.1	10.5	10.9	11.3	11.7	12.1	12.5	12.9	13.3	13.7	14.1	14.5	14.9	15.3	15.7	16.1	16.5	16.9	17.3	17.7	18.1	18.5	18.9	19.3	19.7	20.1	20.5	20.9	21.3	21.7	22.1	22.5	22.9	23.3	23.7	24.1	24.5	24.9	25.3

*In case special stroke please contact technical services.

Standard configuration	Specifications
Continuous Force (N)	120
Peak Current (N)	240
Continuous Current (A)	8.2
Peak Force (A)	3
Max. acceleration (m/s/s)	30
Maximum Speed (m/s)	2
Dividing rule (um)	Magnetic type: resolution1
Repeatability (mm)	0.01
Position accuracy (mm)	0.03(After error compensation)
Linear guide rail	15x12.5-2

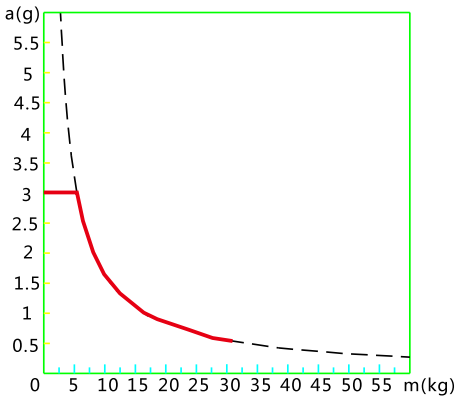

LC17

W-ROBOT® Linear Drives

Cable set installation

LV+

LV-

LH+

LH-

Guide for Model Selection

LC 17 - W8 - S500 - R1 0 -

Qty. single active cell	
None	Single active cell
2	Double cell

Motor Type	
LC	Tubular and iron core linear motion

Body Width	
17	Body Width 170

Model of the active cell	
W8	Tubular and iron core motor model

Stroke
100-2000

Resolution of the magnetic read head	
R1	1um
R2	2um
R5	5um
R10	10um

Limit Sensor	
0	No
1	Photoelectric switch

Cable Chain	
LV+	Vertical left installation (Standard)
LV-	Vertical left installation (Opposite)
LH+	Horizontal left installation (Standard)
LH-	Horizontal left installation (Opposite)
None	Without

LC17

Unit (mm)

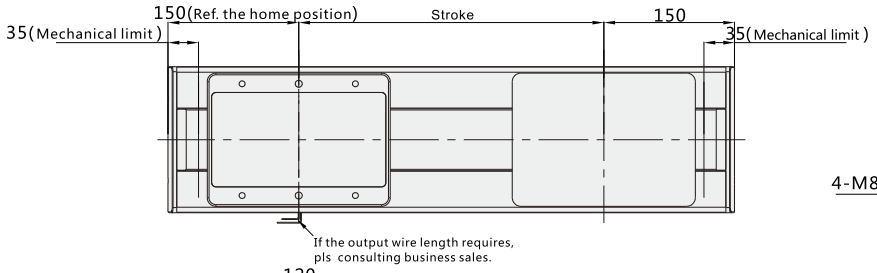

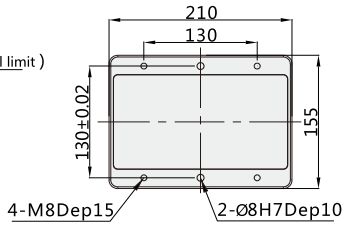

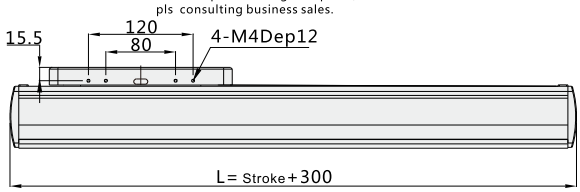

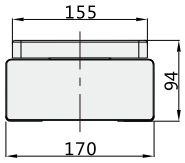

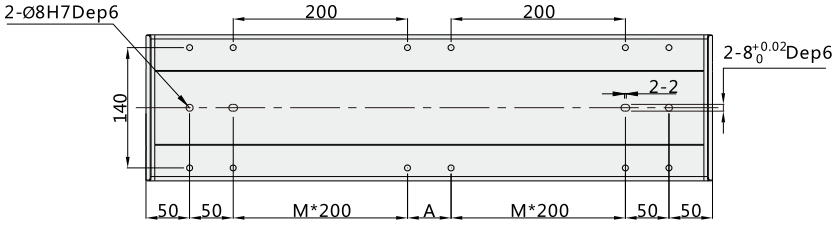

Note: Not including motor weight.

Stroke	100	150	200	250	300	350	400	450	500	550	600	650	700	750	800	850	900	950	1000	1050	1100	1150	1200	1250	1300	1350	1400	1450	1500	1550	1600	1650	1700	1750	1800	1850	1900	1950	2000
L	400	450	500	550	600	650	700	750	800	850	900	950	1000	1050	1100	1150	1200	1250	1300	1350	1400	1450	1500	1550	1600	1650	1700	1750	1800	1850	1900	1950	2000	2050	2100	2150	2200	2250	2300
M	0	0	0	0	1	1	1	1	1	1	1	1	2	2	2	2	2	2	2	2	3	3	3	3	3	3	3	3	4	4	4	4	4	4	4	4	5	5	5
N	8	8	8	8	10	12	12	12	12	12	12	12	14	16	16	16	16	16	16	16	18	20	20	20	20	20	20	20	22	24	24	24	24	24	24	24	26	28	28
A	200	250	300	350	0	50	100	150	200	250	300	350	0	50	100	150	200	250	300	350	0	50	100	150	200	250	300	350	0	50	100	150	200	250	300	350	0	50	100
Weight KG	13.6	14	14.4	14.8	15.2	15.6	16	16.4	16.8	17.2	17.6	18	18.4	18.8	19.2	19.6	20	20.4	20.8	21.2	21.6	22	22.4	22.8	23.2	23.6	24	24.4	24.6	25	25.4	25.8	26.2	26.6	27	27.4	27.8	28.2	28.6

*In case special stroke please contact technical services.

Standard configuration	Specifications
Continuous Force (N)	230
Peak Current (N)	812
Continuous Current (A)	2.7
Peak Force (A)	12
Max. acceleration (m/s/s)	30
Maximum Speed (m/s)	2
Dividing rule (um)	Magnetic type: resolution1
Repeatability (mm)	0.01
Position accuracy (mm)	0.03(After error compensation)
Linear guide rail	15x12.5-2

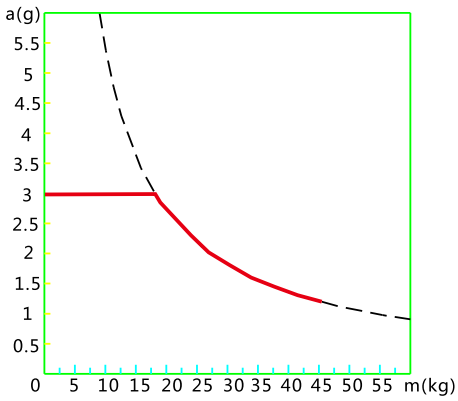

LC22

W-ROBOT® Linear Drives

Cable set installation

LV+

LV-

LH+

LH-

Guide for Model Selection

LC 22 - W10 - S500 - R1 0 -

Qty. of the active cell	
None	Single active cell
2	Double active cell

Motor Type	
LC	Tubular and iron core linear motion

Body Width	
22	Body Width 220

Model of the active cell	
W10	Tubular and iron core motor model

Stroke
100-2000

Resolution of the magnetic read head	
R1	1um
R2	2um
R5	5um
R10	10um

Limit Sensor	
0	No
1	Photoelectric switch

Cable Chain	
LV+	Vertical left installation (Standard)
LV-	Vertical left installation (Opposite)
LH+	Horizontal left installation (Standard)
LH-	Horizontal left installation (Opposite)
None	Without

LC22

Unit (mm)

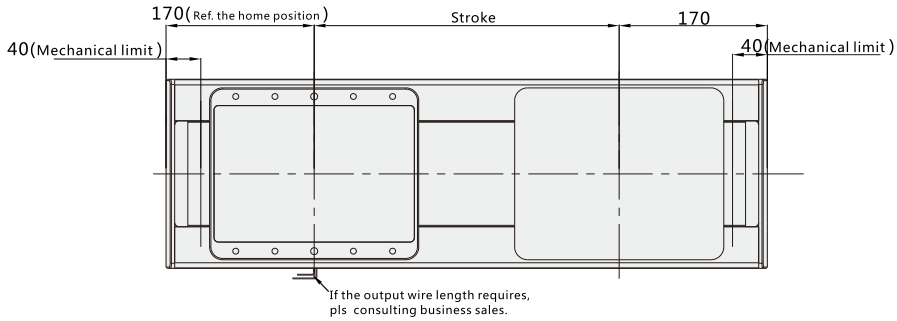

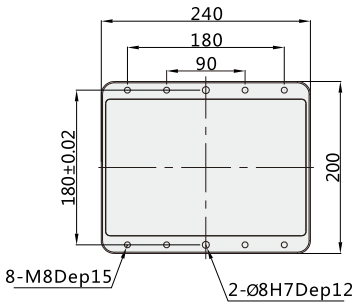

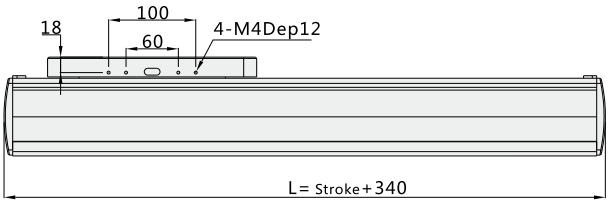

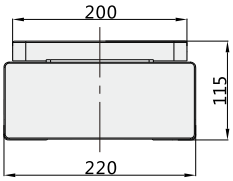

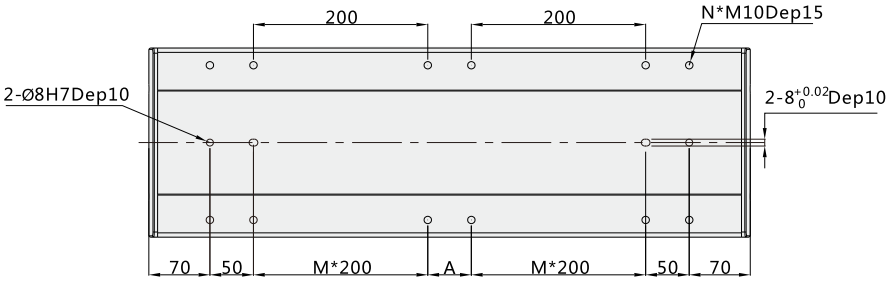

Note: Not including motor weight.

Stroke	100	150	200	250	300	350	400	450	500	550	600	650	700	750	800	850	900	950	1000	1050	1100	1150	1200	1250	1300	1350	1400	1450	1500	1550	1600	1650	1700	1750	1800	1850	1900	1950	2000
L	440	490	540	590	640	690	740	790	840	890	940	990	1040	1090	1140	1190	1240	1290	1340	1390	1440	1490	1540	1590	1640	1690	1740	1790	1840	1890	1940	1990	2040	2090	2140	2190	2240	2290	2340
M	0	0	0	0	1	1	1	1	1	1	1	1	2	2	2	2	2	2	2	2	3	3	3	3	3	3	3	3	4	4	4	4	4	4	4	4	5	5	5
N	8	8	8	8	10	12	12	12	12	12	12	12	14	16	16	16	16	16	16	16	18	20	20	20	20	20	20	20	22	24	24	24	24	24	24	24	26	28	28
A	200	250	300	350	0	50	100	150	200	250	300	350	0	50	100	150	200	250	300	350	0	50	100	150	200	250	300	350	0	50	100	150	200	250	300	350	0	50	100
Weight KG	22.6	23.7	24.8	25.9	27	28.1	29.2	30.3	31.4	32.5	33.6	34.7	35.8	36.9	38	39.1	40.2	41.3	42.4	43.5	44.6	45.7	46.8	47.9	49	50.1	51.2	52.3	53.4	54.5	55.6	56.7	57.8	58.9	61	62.1	63.2	64.3	55.4

*In case special stroke please contact technical services.

Standard configuration	Specifications
Continuous Force (N)	300
Peak Current (N)	1110
Continuous Current (A)	2.6
Peak Force (A)	12
Max. acceleration (m/s/s)	30
Maximum Speed (m/s)	2
Dividing rule (um)	Magnetic type: resolution1
Repeatability (mm)	0.01
Position accuracy (mm)	0.03(After error compensation)
Linear guide rail	20x18-2

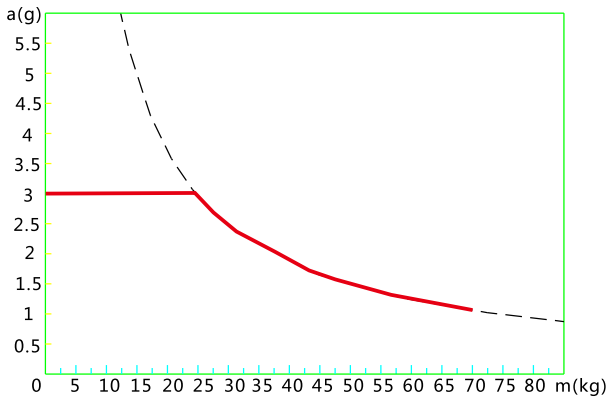

2LC14

W-ROBOT®
Linear Drives

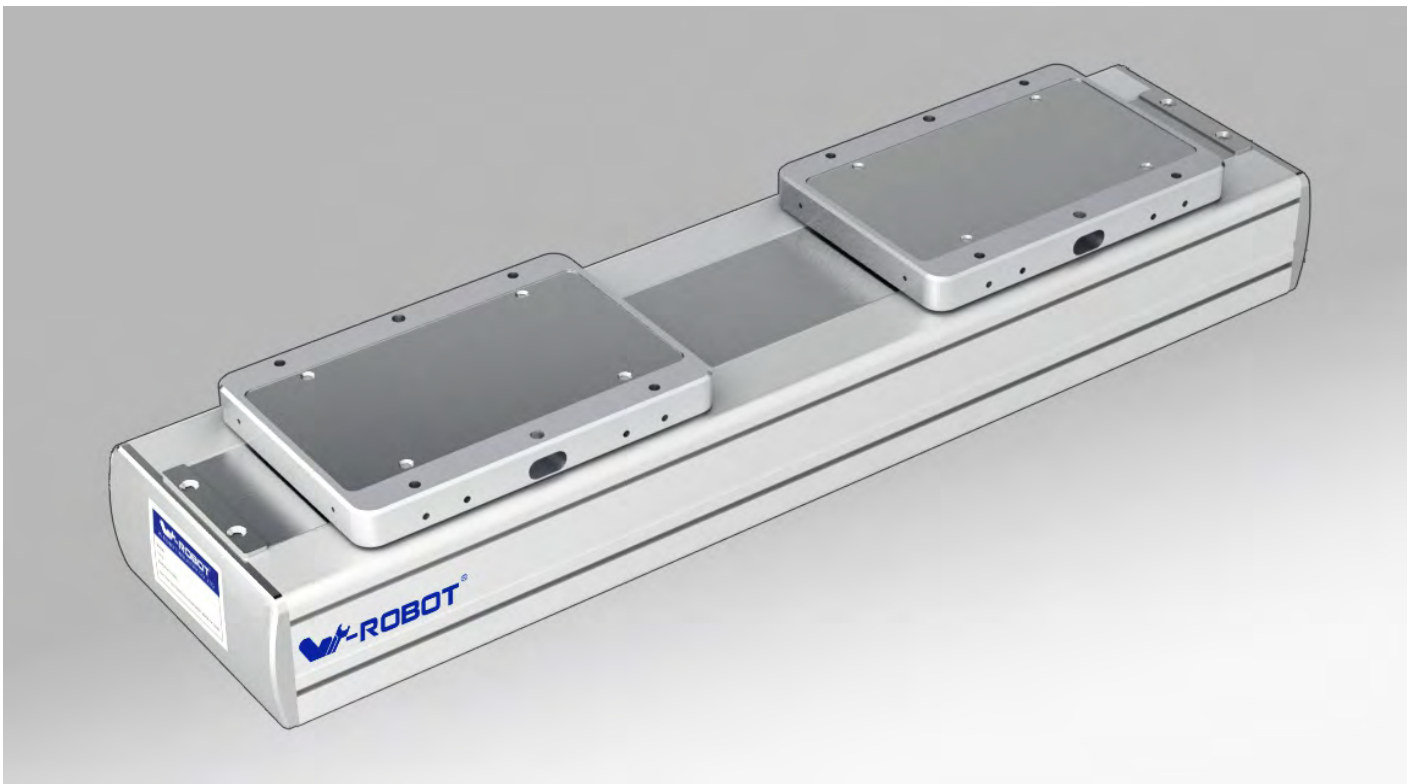

Guide for Model Selection

2 LC 14 - W6 - S500 - R1 1 - __

Qty. of the active cell	
None	Single active cell
2	Double active cell

Motor Type	
LC	Tubular and iron core linear motion

Body Width	
14	Body Width 140

Model of the active cell	
W6	Tubular and iron core motor model

Stroke
100-2000

Resolution of the magnetic read head	
R1	1um
R2	2um
R5	5um
R10	10um

Limit Sensor	
0	No
1	Photoelectric switch

Cable Chain	
LV+	Vertical left installation (Standard)
LV-	Vertical left installation (Opposite)
LH+	Horizontal left installation (Standard)
LH-	Horizontal left installation (Opposite)
None	Without

2LC14

Unit (mm)

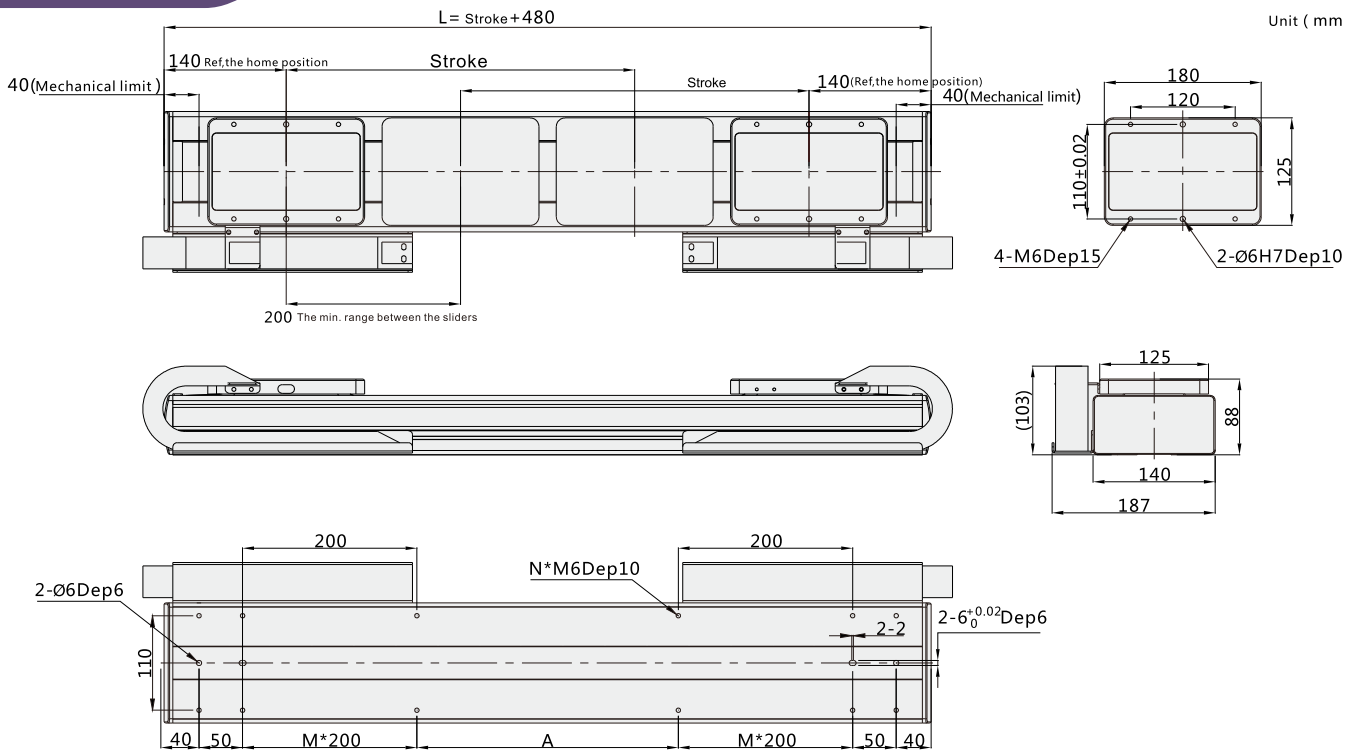

Note: Not including motor weight.

Stroke	100	150	200	250	300	350	400	450	500	550	600	650	700	750	800	850	900	950	1000	1050	1100	1150	1200	1250	1300	1350	1400	1450	1500	1550	1600	1650	1700	1750	1800	1850	1900	1950	2000
L	580	630	680	730	780	830	880	930	980	1030	1080	1130	1180	1230	1280	1330	1380	1430	1480	1530	1580	1630	1680	1730	1780	1830	1880	1930	1980	2030	2080	2130	2180	2230	2280	2330	2380	2430	2480
M	1	1	1	1	1	1	1	1	2	2	2	2	2	2	2	2	3	3	3	3	3	3	3	3	4	4	4	4	4	4	4	4	5	5	5	5	5	5	5
N	10	12	12	12	12	12	12	12	14	16	16	16	16	16	16	16	18	20	20	20	20	20	20	20	22	24	24	24	24	24	24	24	26	28	28	28	28	28	28
A	0	50	100	150	200	250	300	350	0	50	100	150	200	250	300	350	0	50	100	150	200	250	300	350	0	50	100	150	200	250	300	350	0	50	100	150	200	250	300
Weight KG	13.4	13.8	14.2	14.6	15	15.4	15.8	16.2	16.6	17	17.4	17.8	18.2	18.6	19	19.4	19.8	20.2	20.6	21	21.4	21.8	22.2	22.6	23	23.4	23.8	24.2	24.6	25	25.4	25.8	26.2	26.6	30	30.4	30.8	31.2	31.6

*In case special stroke please contact technical services.

Standard configuration	Specifications
Continuous Force (N)	120
Peak Current (N)	240
Continuous Current (A)	8.2
Peak Force (A)	3
Max. acceleration (m/s/s)	30
Maximum Speed (m/s)	2
Dividing rule (um)	Magnetic type: resolution1
Repeatability (mm)	0.01
Position accuracy (mm)	0.03(After error compensation)
Linear guide rail	15x12.5-2

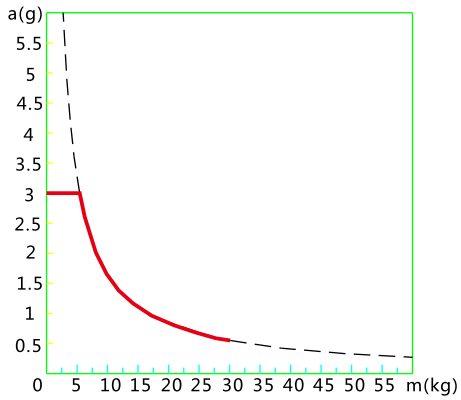

LT76
linear motor (desktop type)

W-ROBOT® Linear Drives

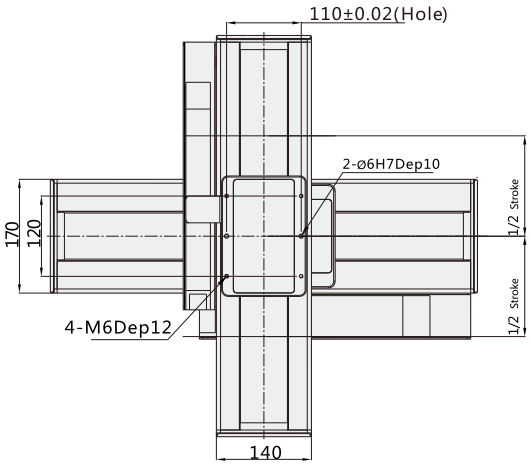

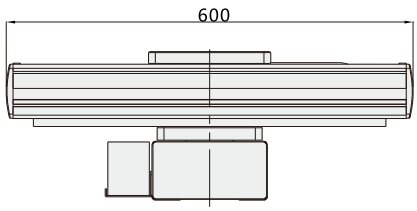

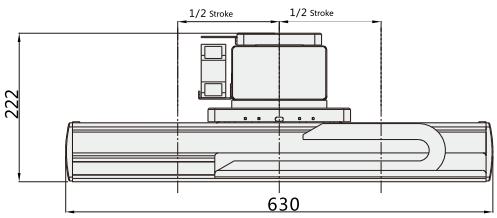

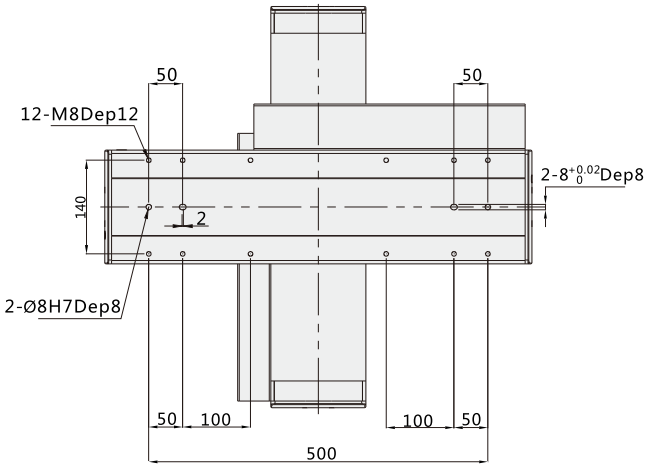

Technical specifications

Table model：	LT76XY-T3225-300x300		
Peak Current(N)	Up axial : 202 lower shaft : 420	Repeatability (mm)	±0.01
Continuous Force(N)	Up axial : 67 lower shaft : 140	Position accuracy (mm)	±0.03(After error compensation)
Stroke	Up axial : 300 lower shaft : 300	Limit switch	Photoelectric switch
Max. acceleration (m/s/s)	8	Facade	Ecru oxidation electrophoresis and glaze
Maximum Speed (m/s)	0.8	Base seat material	Alufer
Rated Payload (kg)	15	Installation Way	Horizontal
Encoder (um)	Magnetic type: resolution1	Table weight (kg)	40kg

Remark: if customization requires,pls contact us directly.

LMDT
linear motor (desktop type)

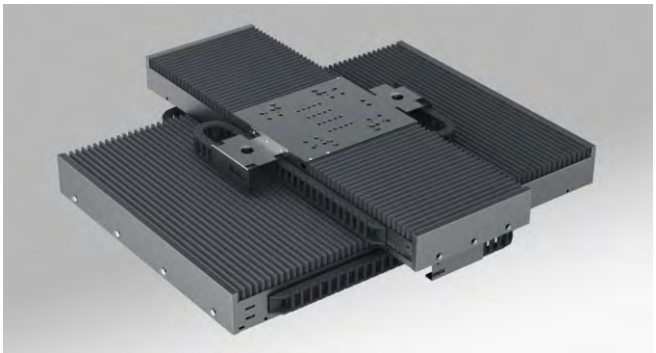

Unit (mm)

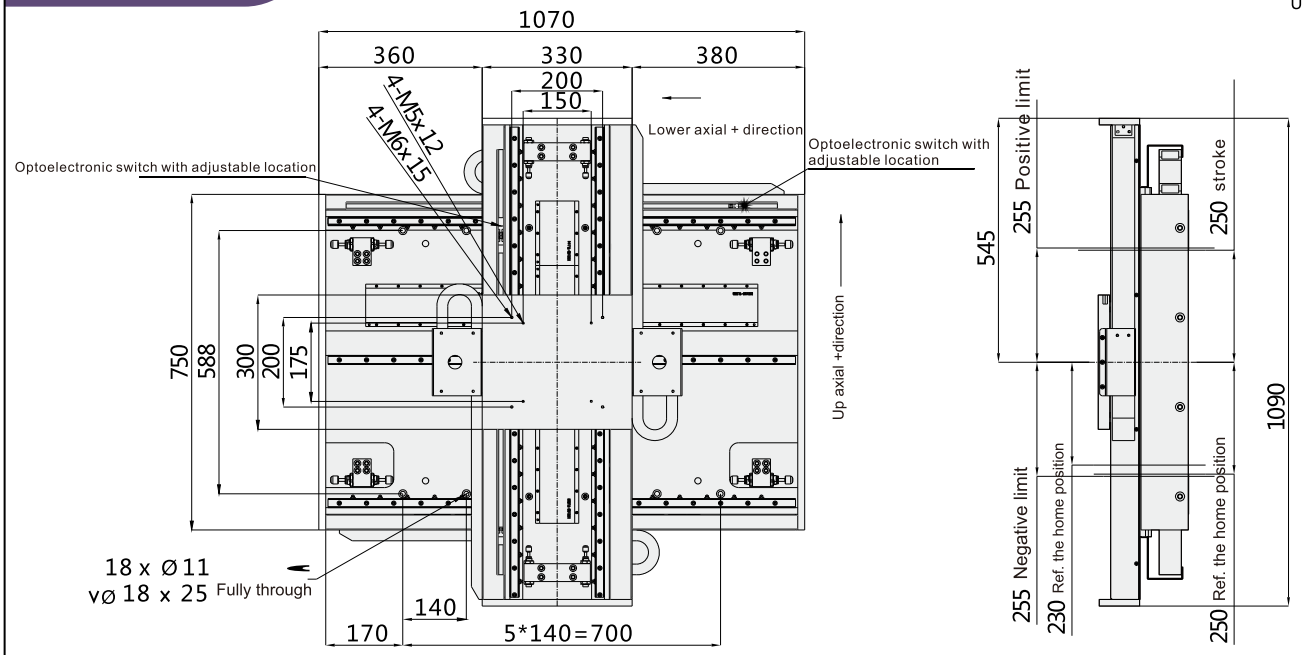

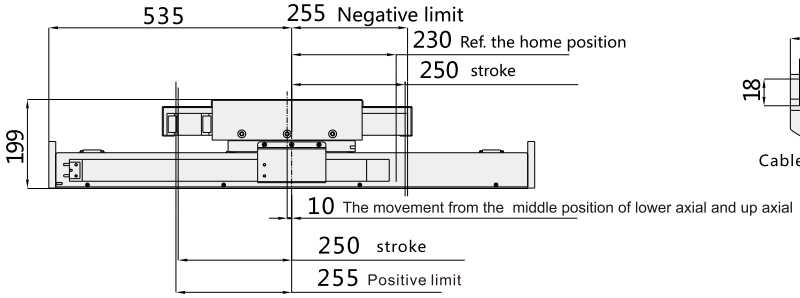

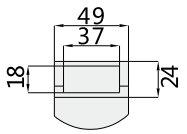

Cable specifications

Technical specifications

Model of the table:	LMDTXY-IGE186-IGE268-S500-S500-Y20			
Peak Current(N)	Up axial:1110	lower shaft:1700	Repeatability(mm)	±0.075
Continuous Force(N)	Up axial:300	lower shaft:435	Position accuracy(mm)	±0.03After error compensation
Stroke(mm)	Up axial:500	lower shaft:500	Limit switch	Photoelectric switch
Max. acceleration (m/s/s)	12		Facade	Black anode
Maximum Speed (m/s)	0.8		Base seat material	Alufer
Rated Payload (kg)	45		Installation Way	Horizontal
Encoder (um)	grating ruler:0.1		Table weight(kg)	(160)

Remark: if customization requires,pls contact us directly.

AppenduxA : Technical terms

1、 Peak Thrust Fp（N）

The max. force that motor can generate within one second , generally used for acceleration or deceleration.

2、 Continuous Thrust Fc（N）

The force that motor can generate with continuous current by which 100% load factor is charged to motor coil.

3、 Peak Current Ip(A)

The maximum current that can be input to motor coil within one second.

4、 Continuous Current Ic（A）

The current that can generate continuous thrust, it can be continuously supplied to motor coil, generally, the temperature won' t exceed 80°C when this current go through motor coil.

5、 Motor Force Constant Kf（N/A）

The thrust that unitary current can generate. This parameter multiplying current goes to thrust:F=IxKf; it reflects electromagnetic design result of motor

6、 Motor Constant Km（N/√W）

The ratio of motor thrust to the square root of power comsuption, it synthetically reflects the electromagnetic design and thermal design level,stands for motor efficiency.

7、 Time Constant (ms)

which motor current reaches to 63% of target value , it' s inductance to resistance ratio.

8、 Inductance (mH)

Inductance of motor three phase line to line, the lower inductance, the faster response motor can have

9、 Resistance (Ω)

Resistance of motor three phase line to line. Parallel coil can reduce resistance, inductance and back electromotive force, however, it will take two times of current to reach the same thrust. As far as copper line is concerned, coil temperature rises 1°C , resistance will increase by 0.393%.

10、Thermal Resistance (°C/W)

The raised temperature with moving coil consuming 1 watt energy, In general , lower thermal resistance means better radiating structure

11、Magnetic Pitch (mm)

Distance between two identical polarities in a stator . E.g. S-S or N-N, driver need it together with resolution of feedback system to calculate motor electrical angle for vector control.

12、Back Electromotive Force Constant (V/m/s)

The back electromotive force when motor running at 1m/s speed.
It occurs when coil inducing the magnetic field changing and resistance current going through.

13、Resolution

The minimum distance that the position feedback system can measure

14、Motion Resolution

The minimus distance that the position system can repeatably move. Influencing factor including : resolution of position feedback system and resolution of controller driver.

How to select a Linear Motor

For the model selection of the linear motion motors,we requires to ensure the working speed,stroke,payload and ect.to decision the motion rules and others parameters,which helps to count out the peak thrust,continuous thrust,peak current,continuous current. With above detils the model can be soon selected.

Application symbol

Fp: peak thrus(N)
M: Mass(kg)
A: Accelerated speed(m/s²)
Ff: Friction torque(N)
Fc: continuous thrust(N)
Fa: Accelerating force(N)
Ta: The acceleration time(s)
Fc: Constant speed thrust(N)
Tc: The constant speed time(s)
Fd: Decelerative force(N)
Td: The slow time(s)
Fw: Riside force(N)
Tw: The resident time(s)
X: Stroke (m)
T: Traveling time(s)
V: Speed(m/s)
g: Acceleration of gravity(m/s²)
u: Friction factor
Ip: Electric current(A)
Ic: Continuous current(A)
Ie: Equivalent current(A)
Kf: Motor thrust constant (N/A)
Fe: The equivalent thrust(A)

Linear motion models selections cases:
If the movements parts total mass 8kg,stroke:500mm,motion time0.5s, stay time 0.1s, friction factor 0.02,
Then the final result can be calculate below:

$$V=2*X/T=2*0.5/0.5=2(m/s)$$

$$A=4*X/T^2=4*0.5/0.5^2=8(m/s^2)$$

$$Fp=M*A+(M*g+Fa)*u=8*8+(8*10)*0.02=64+1.6=65.6(N)$$

$$Fe=\sqrt{\frac{(64+1.6)^2 0.25+(64-1.6)^2 0.25}{0.5+0.1}}=58.44(N)$$

Above all, the elementary selection will be LC14 linear motion motor(The peak trust 240N,continuous thrust 120N,constant thrust39N/A,peak current 8.2A, Continuous current 3A),the drive current can be calculate following:

Ip=65.6/39=1.7A<8.2(A) Ie=58.44/27=1.5A<3(A)
Ie/Ic=1.5/3=50%<70%

Final result calculate by the current, LC14 meet the requirement above.

1、 The accelerated speed can be calculate according to the outline of the motion speed (Same way to calculate the decelerative force)

(1) Short travel stroke movement, can be using the 1/2-1/2 triangular trajectory.

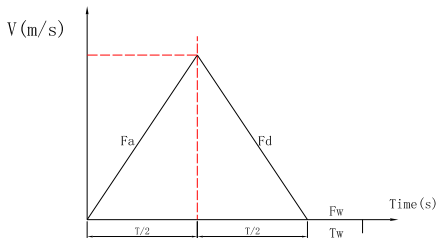

$A=4*X/T^2$
$V=2*X/T$

(2) Long travel stroke movement can be using the 1/3-1/3-1/3 Trapezoidal trajectory.

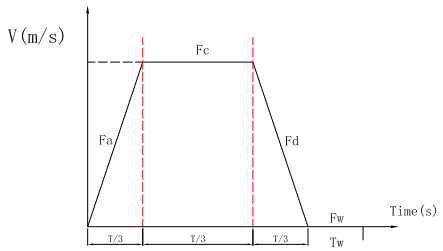

$A=4.5*X/T^2$
$V=1.5*X/T$

The accelerated speed catalucated by the firsrt motion trajectory will less than the second motion trajectory.Usually the second motion trajectory requires larger motor force.The real motion trajectory can be selected by the actually requires.

2、 Confirm the peak trust,the equivalent thrust

(1) The formula mode of the peak trusted :

$$Fp=M*A+(M*g+Fa)*u=Fa+Ff$$

(2) Formula mode of the equivalent thrust below:

$$Fe=\sqrt{\frac{(Fa+Ff)^2 Ta+Ff^2 Tc+(Fa-Ff)^2 Td}{Ta+Tc+Td+Tw}}$$

The following peak current IP and equivalent thrust can be calculate as below formula mode:
Ip=Fp/Kf
Ie=Fe/Kf

When model selection the suitable motors,we requries to consideration the specific value between Equivalent current and Continuous current .(you can check the motor specification tables),both specific value (Ie/Ic) are safety range under 0.7.

V-ROBOT®

Linear Drives

Distributors for Australia & New Zealand

MOTION TECHNOLOGIES PTY LTD

24/22-30 Northumberland Road
Caringbah NSW 2229 Australia
Phone: (02) 9524 4782

sales@motiontech.com.au
www.motiontech.com.au

© 09/11/2020