V-ROBOT®
Linear Drives

www.motiontech.com.au

CONTENTS

Product Selection 002
Specification List 008
Cartesian Robot Configuration 010
Applications 015
Product Structure &Function 022
Product Selection Guidance 031
Motor's Flange Selection Tool 033
VF2B20-A1 285
VF32B2-A1 287
VF432B-A1 289
VF643-A1 291
VF764-A1 293
VFA01 296
VFA05 297
VFA10 298
VFA15 299

13 Multi-axis actuator

▶P.284

VF2B20-A1

Maximum Stroke	X axis 950mm Y axis 350mm
Maximum Payload	5KG ····· 285
Body Width	VF8 80mm VF6 60mm

VF32B2-A1

Maximum Stroke	X axis 950mm Y axis 350mm Z axis 300mm
Maximum Payload	5KG ····· 287
Body Width	VF10 100mm VF8 80mm VF6 60mm

VF432B-A1

Maximum Stroke	X axis 1100mm Y axis 500mm Z axis 350mm
Maximum Payload	6KG ····· 289
Body Width	VF12 120mm VF10 100mm VF8 80mm

VF643-A1

Maximum Stroke	X axis 1200mm Y axis 550mm Z axis 350mm
Maximum Payload	12KG ····· 291
Body Width	VF14 140mm VF12 120mm VF10 100mm

VF764-A1

Maximum Stroke	X axis 1200mm Y axis 600mm Z axis 350mm
Maximum Payload	16KG ····· 293
Body Width	VF17 170mm VF14 140mm VF12 120mm

14 Cartesian 4 axes robot

▶P.295

VFA01

Maximum Stroke	X axis 300mm Y axis 300mm Z axis 150mm R axis 360°
Maximum Payload	1KG ····· 296
Body Width	VF10 100mm VF8 80mm VF6 60mm R01 80mm

VFA05

Maximum Stroke	Xaxis 300mm Y axis 300mm Z axis 150mm R axis 360°
Maximum Payload	5KG ····· 297
Body Width	VF12 120mm VF10 100mm VF8 80mm R05 90mm

VFA10

Maximum Stroke	X	400mm
	Y	400mm
	Z	150mm
	R	360°
Maximum Payload	10KG	298
Body Width	VF14	140mm
	VF12	120mm
	VF10	100mm
	R15	97mm

VFA15

Maximum Stroke	X	500mm
	Y	500mm
	Z	250mm
	R	360°
Maximum Payload	15KG	299
Body Width	VF17	170mm
	VF14	140mm
	VF12	120mm
	R15	97mm

Specification

W-ROBOT®
Linear Drives

Company	_____	Register Date	_____	Contact	_____
Dept	_____	Tel	_____	Ext	_____
E-mail	_____	Mobile	_____	Address	_____

Single axis required

Stroke (mm): _____

Speed (mm/s): _____

Payload (kg): _____

Repeatability(mm) :

☐ ±0.006

☐ ±0.01

☐ ±0.04

☐ Other _____

Usage Environment

☐ General

☐ Dust-free (Cleaness type)

(Cleanliness: Class10 Class100 Class1000)

Installation Way	Fixed whole-plane Horizontal 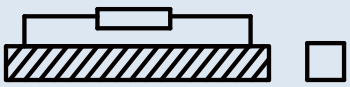 Side 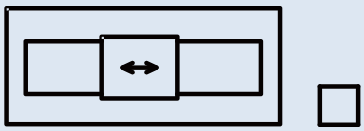 Vertical 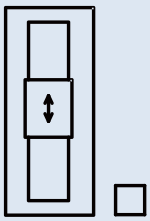
Space required	Loose model choice Ball Screw Drive 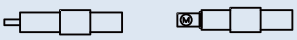 ☐BA ☐ BC (standard) Belt Drive 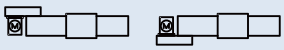 ☐BR ☐BL Compact model choice Ball Screw Drive 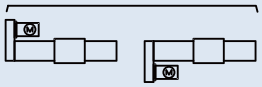 ☐BR ☐BL Belt Drive 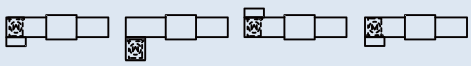 ☐BLU ☐BRU ☐BRD ☐BLD Motor Power can be increased by external installed
Sensor	☐ Optoelectronic type(External) ☐ Metal induction type(External)
Applications	☐ Automatic Assembly Machine ☐ Labeling Machine ☐ Film Sticking Machine ☐ Laminating Machine ☐ Auto-Screwdriving Machine ☐ Spraying Machine ☐ CCD Visual Inspection Equipment ☐ Loading and Unloading Equipment
Remarks	

Specification

Company	_____	Register Date	_____	Contact	_____
Dept	_____	Tel	_____	Ext	_____
E-mail	_____	Mobile	_____	Address	_____

Multi Axis Required

Stroke (mm) X: Y: Z:

Speed (mm/s) X: Y: Z:

Payload (kg):

Repeatability(mm) :

☐ ±0.006

☐ ±0.01

☐ ±0.04

☐ 其它(Other)_____

Usage Environment

☐ General

☐ Dust-free (Cleaness type)

(Cleanliness: Class10 Class100 Class1000)

Combination Types

Arm Type

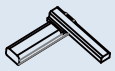

(A1) ☐

(A2) ☐

(A3) ☐

(A4) ☐

Gantry Type

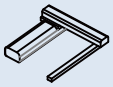

(G1) ☐

(G2) ☐

(G3) ☐

(G4) ☐

Moving Arm Type

(P1) ☐

(P2) ☐

XZ Type

(F1) ☐

(F2) ☐

Multi-axis Type

Reference the P11-15 : Images No.

☐ Arm type with 2-axis(A)

☐ Arm type with 3-axis(A)

☐ Gantry type with 2-axis(G)

☐ Gantry type with3-axis(G)

☐ Spontaneous Moving Gantry type with 2-axis(G)

☐ XY type with 2-axis(F)

☐ Moving arm type with 2-axis(P)

☐ Moving arm type with 3-axis(P)

Sensor

☐ Optoelectronic type(External) ☐ Metal induction type(External)

Applications

☐ Automatic Assembly Machine ☐ Film Sticking Machine ☐ Laminating Machine

☐ Auto-Screwdriving Machine ☐ Spraying Machine ☐ CCD Visual Inspection Equipment ☐ Other _____

Remarks

Cartesian Robot Configuration

W-ROBOT®
Linear Drives

Multi-axis combination models as figure below, if other models required, consultation service available basing on request.

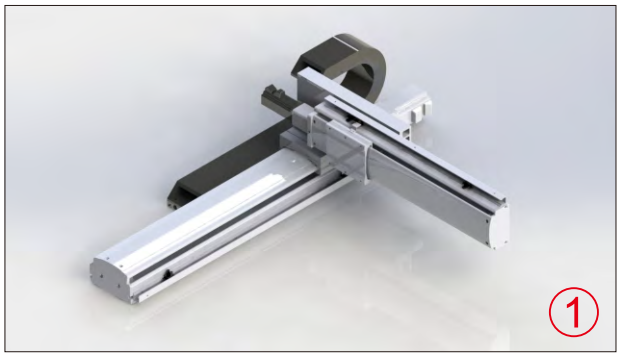

Arm type with 2 axes (A series)

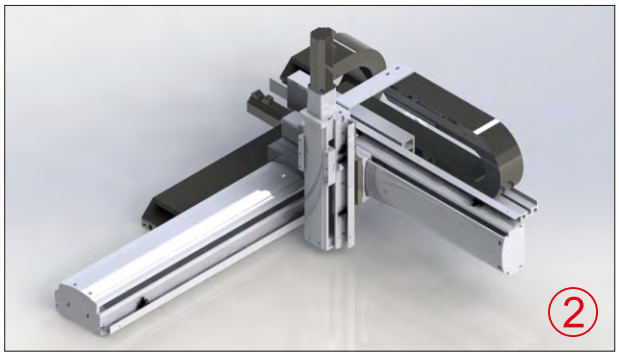

Arm type with 3 axes (A series)

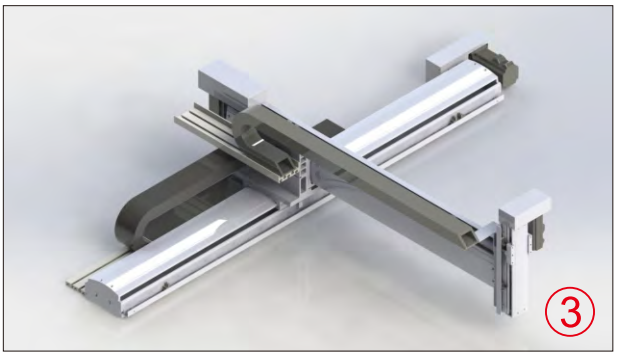

Arm type with 3 axes (A series)

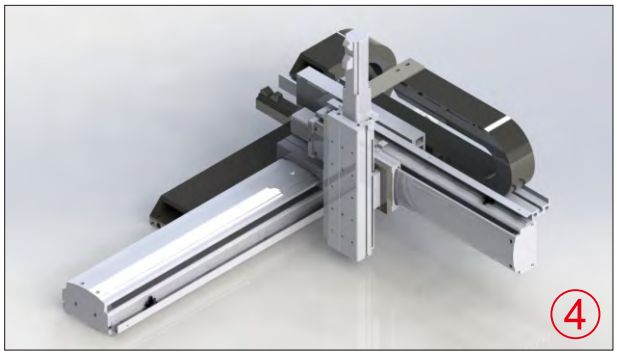

Arm type with 3 axes (A series)

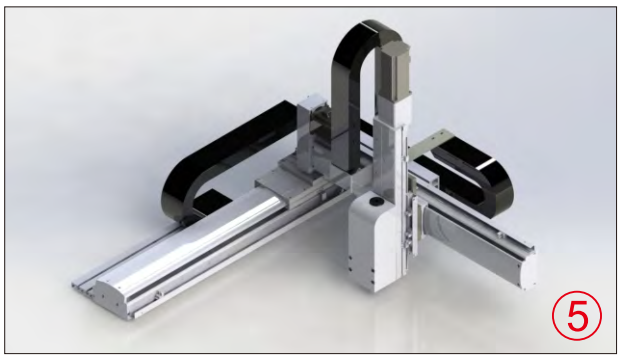

Arm type with 4 axes (AR series)

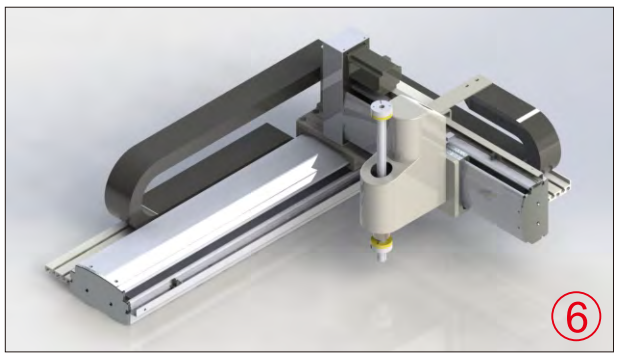

Arm type with 4 axes (AZR series)

Cartesian Robot Configuration

Arm type with 6 axes (A series)

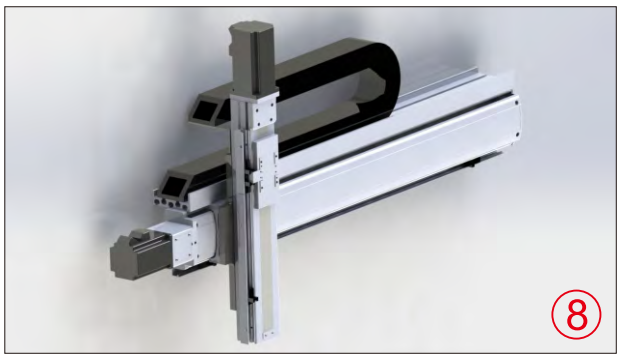

Cross 2 axes (F series)

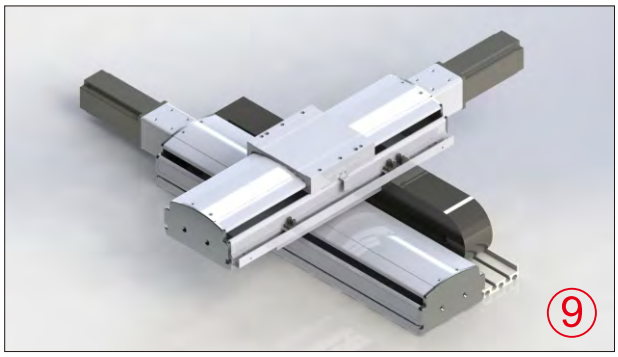

Cross 2 axes (F series-Horizontal)

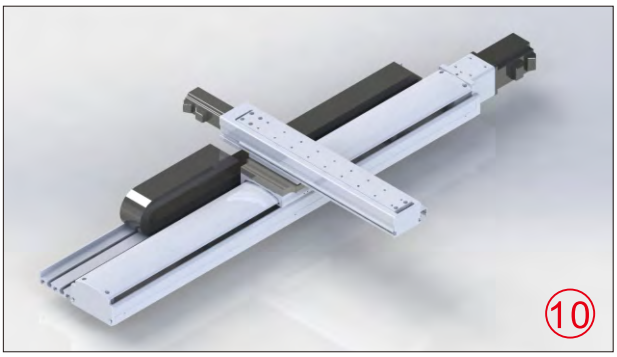

Cross 2 axes (F series-movement by Y axis)

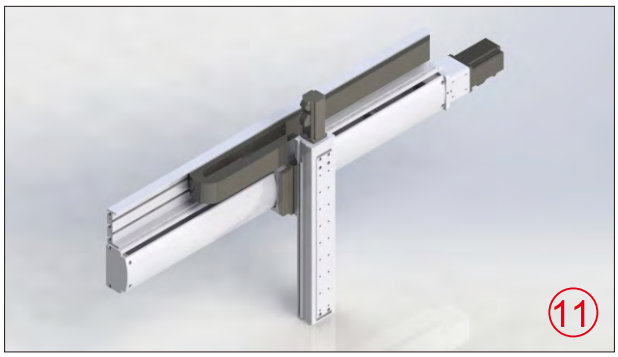

Cross 2 axes (F Series - Z-axis body moved)

Gantry 2 axes (G series)

Gantry 3 axes (G series)

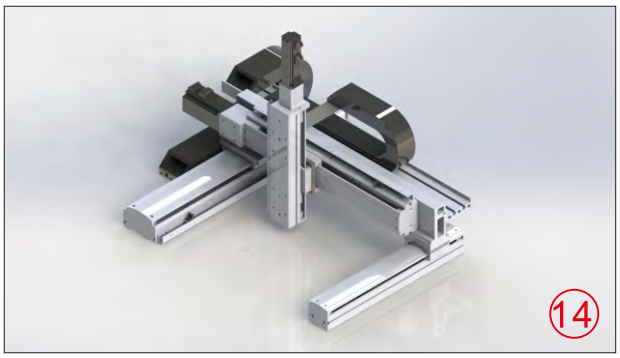

Gantry 3 axes (G series)

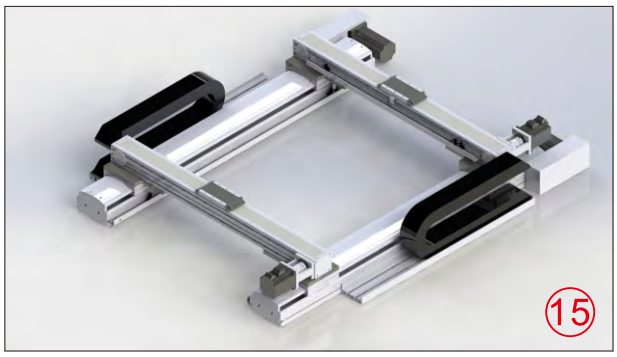

Gantry combinatorial association (G series)

Cartesian Robot Configuration

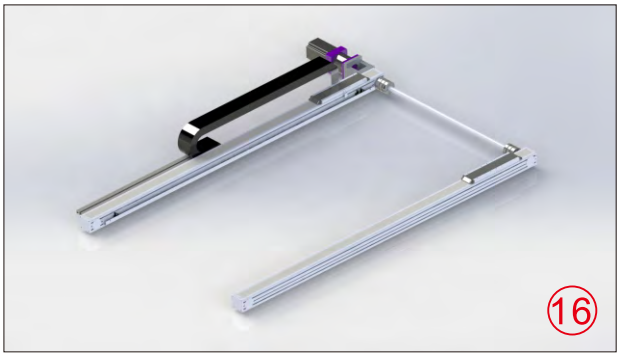

Synchronous moving gantry axes

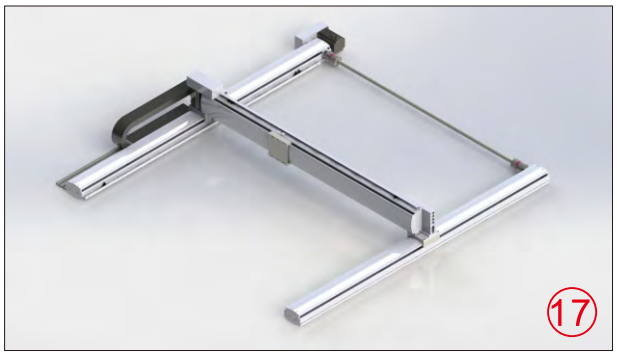

Synchronous moving gantry type with 2 axes

Synchronous moving gantry type with 3 axes

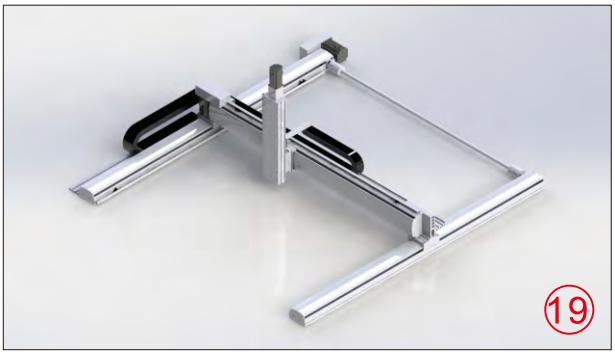

Synchronous moving gantry type with 3 axes
(G series- Z-axis body moved)

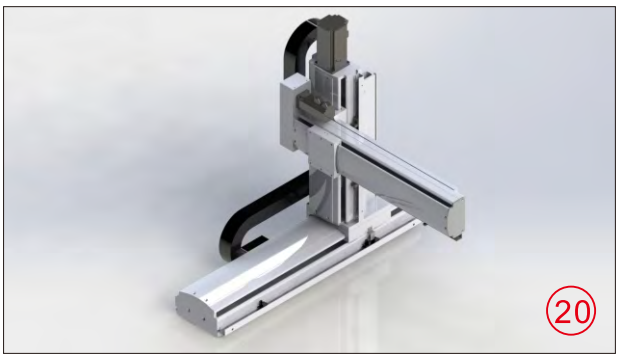

Moving arm type with 3 axes(P series)

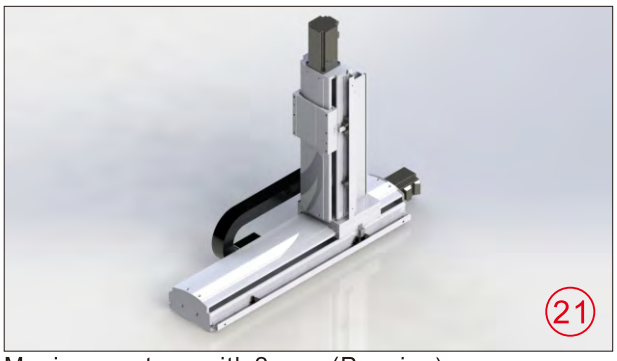

Moving arm type with 2 axes(P series)

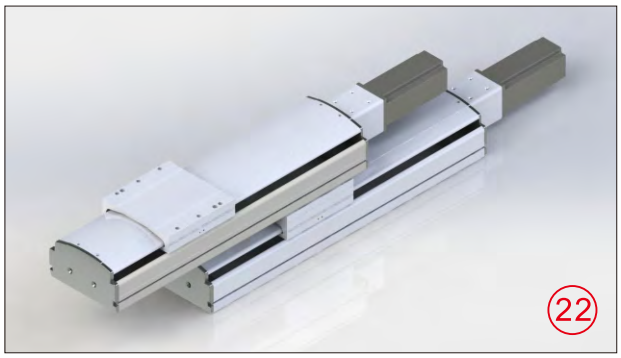

Stack-based 2 axes (E series)

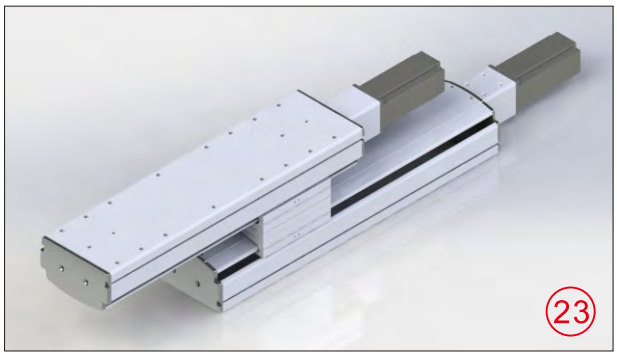

Stack-based 2 axes (E series-slide block fixed, body moved)

Moving arm type with 8 axes (P series)

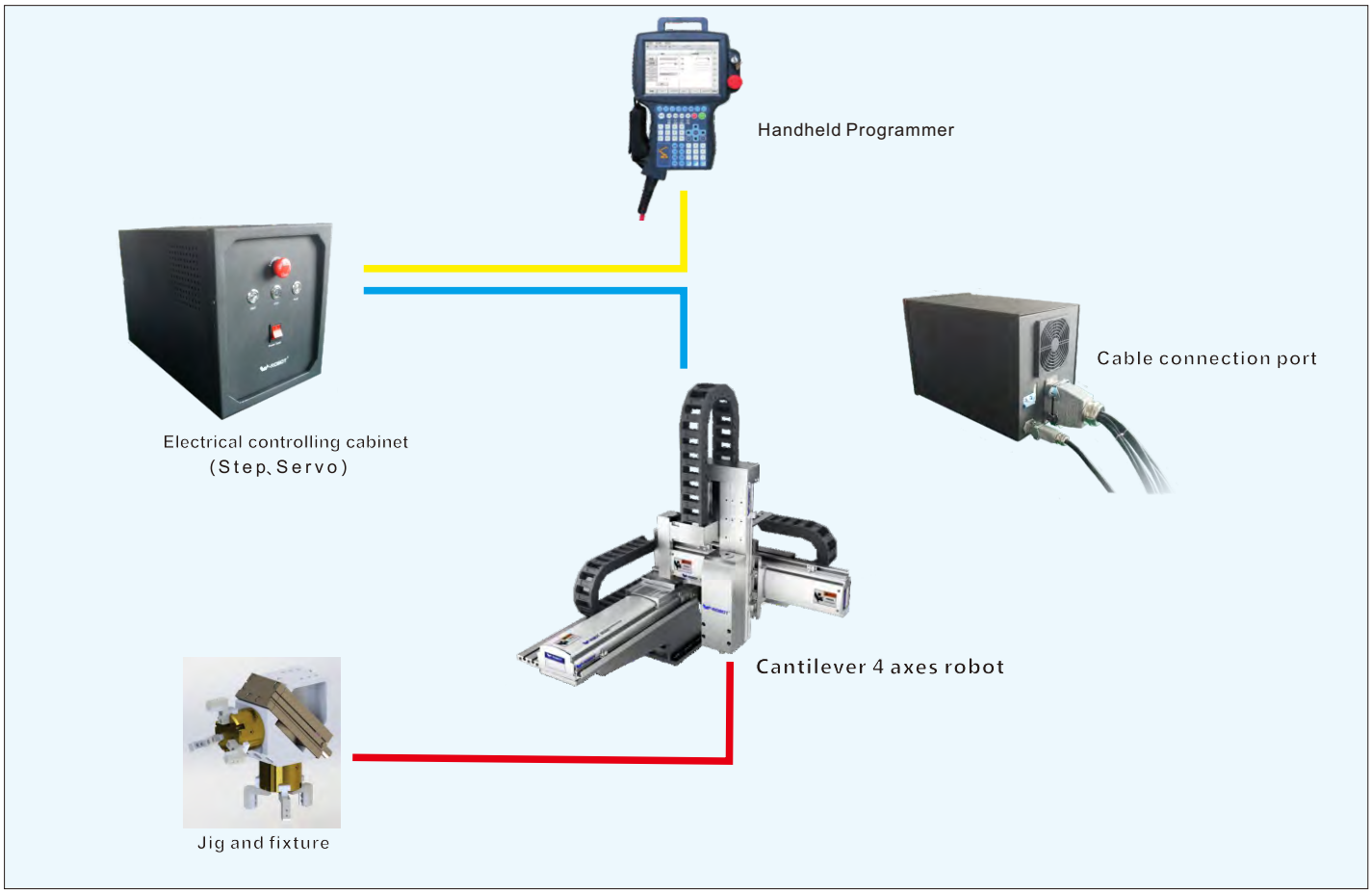

Robot arm control system

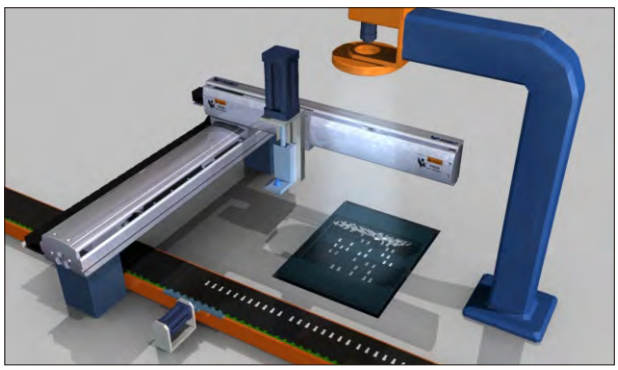

Auto-loading after CCD visual checking

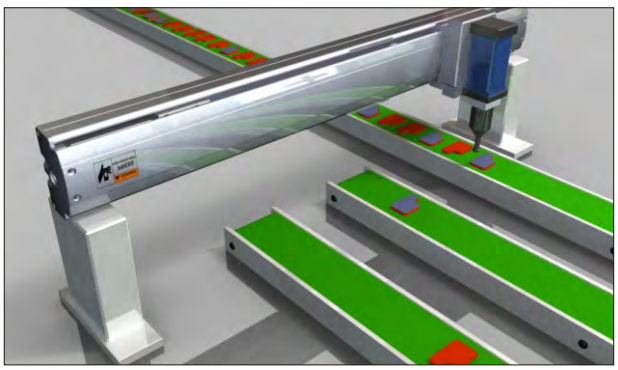

Sorting parts on the specified position

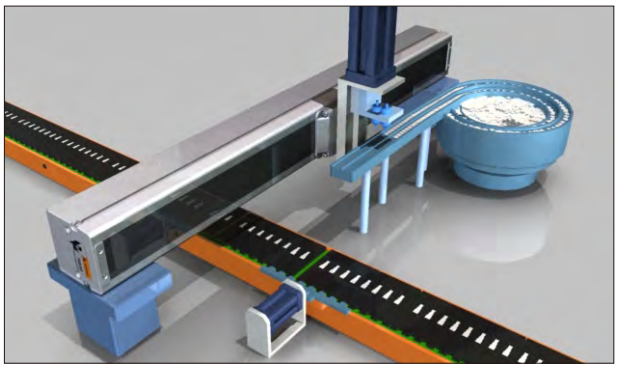

Picking parts from the vibrating bowl

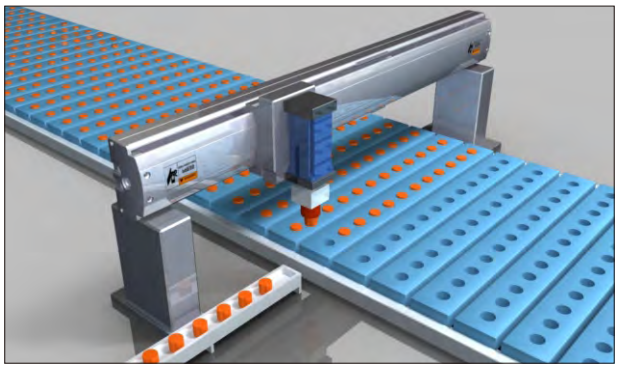

Press the workpiece into the hole

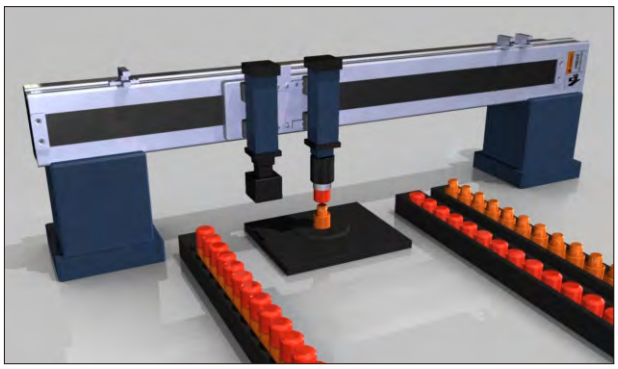

Parts assembling

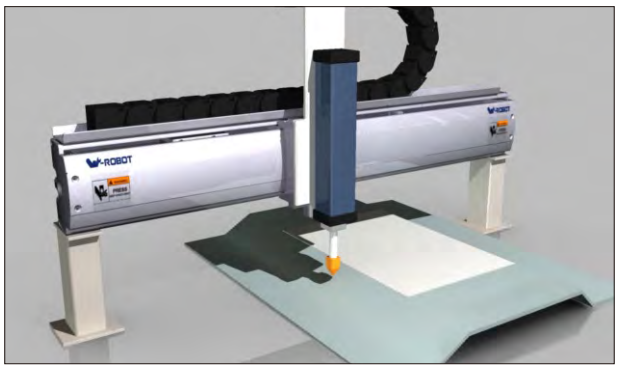

Inkjet operation

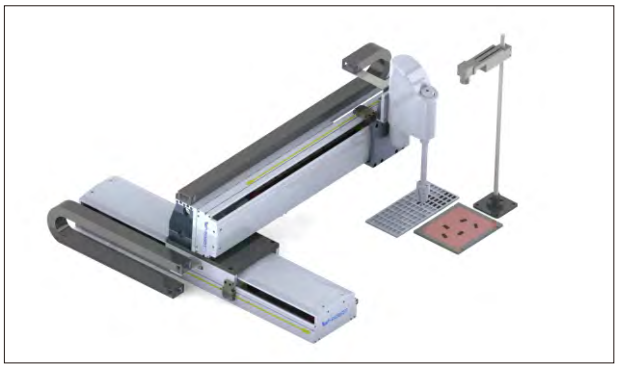

Flexible picking

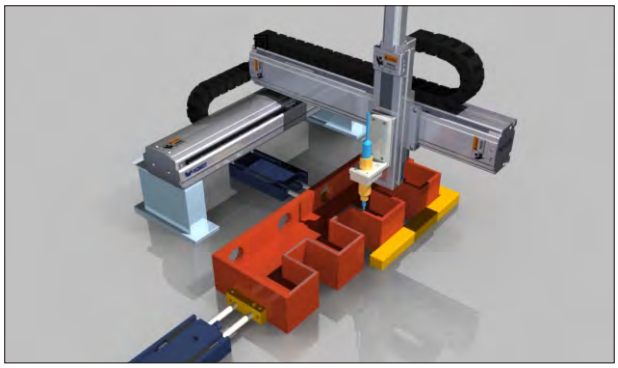

Sealant gluing to the joint of workpiece

Applications

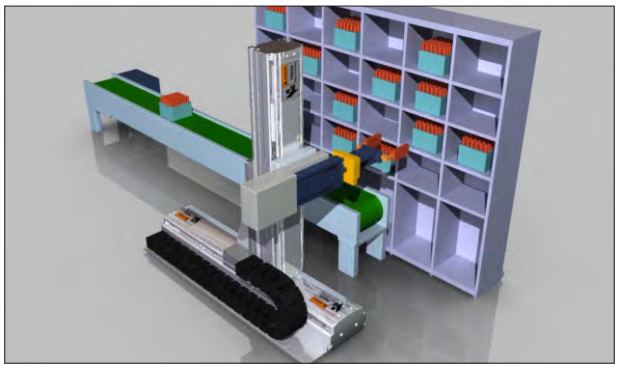

Large-scale parts rack pick & place

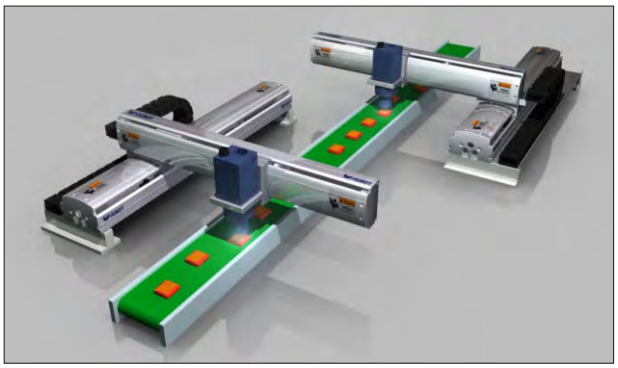

Electric parts testing

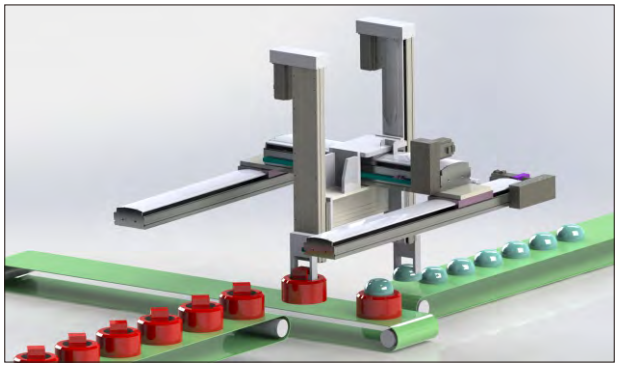

Parts handling

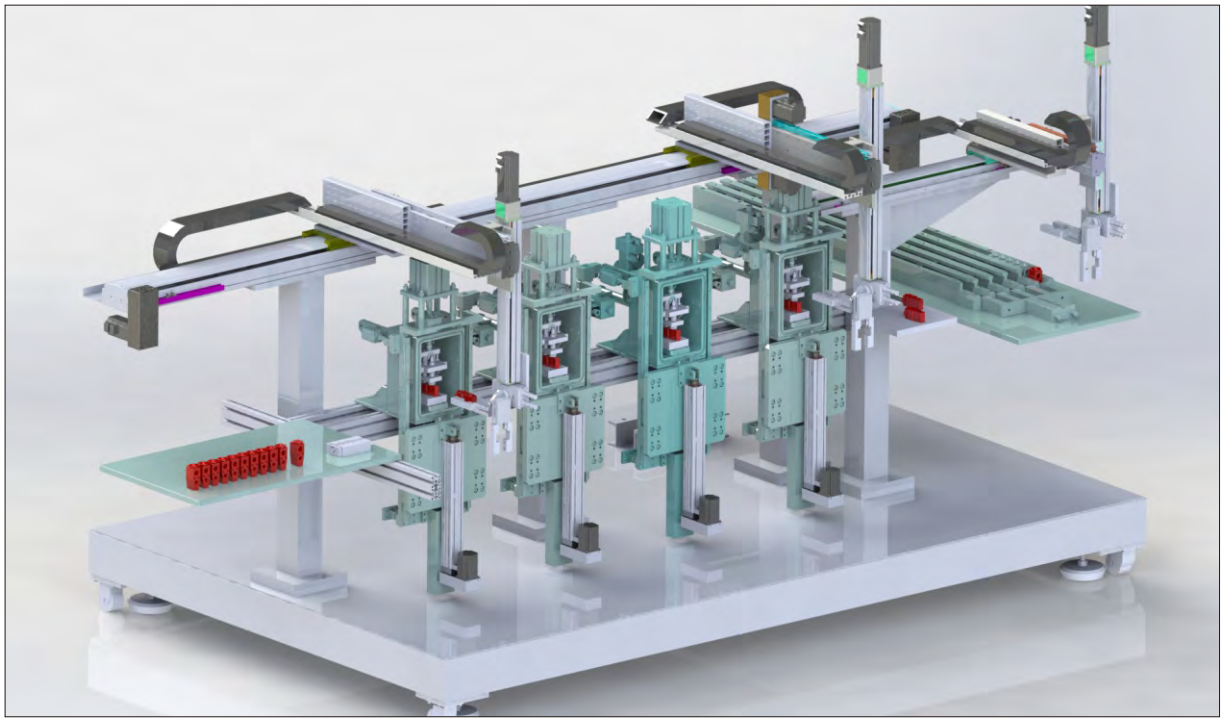

Auto-loading & unloading for parts testing system

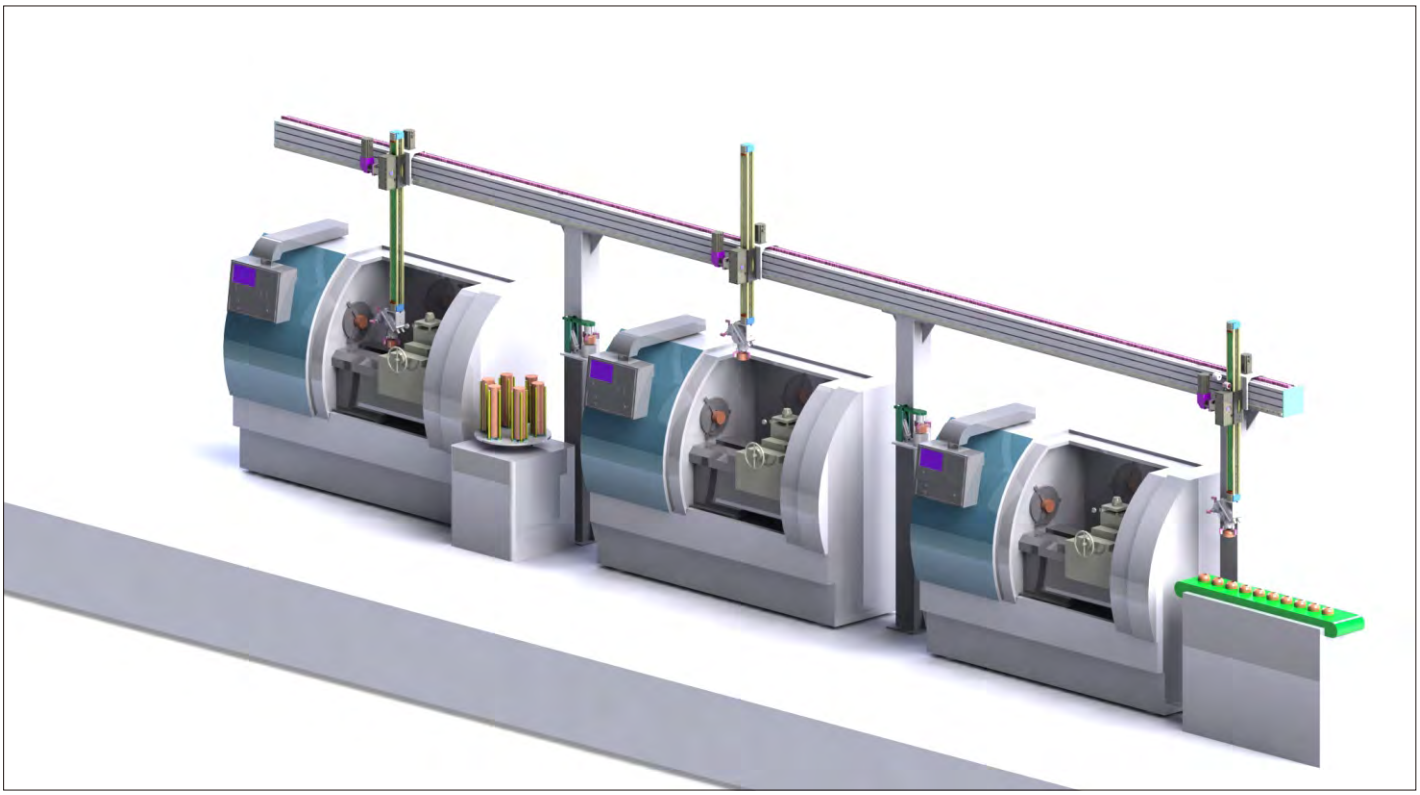

CNC loading & unloading

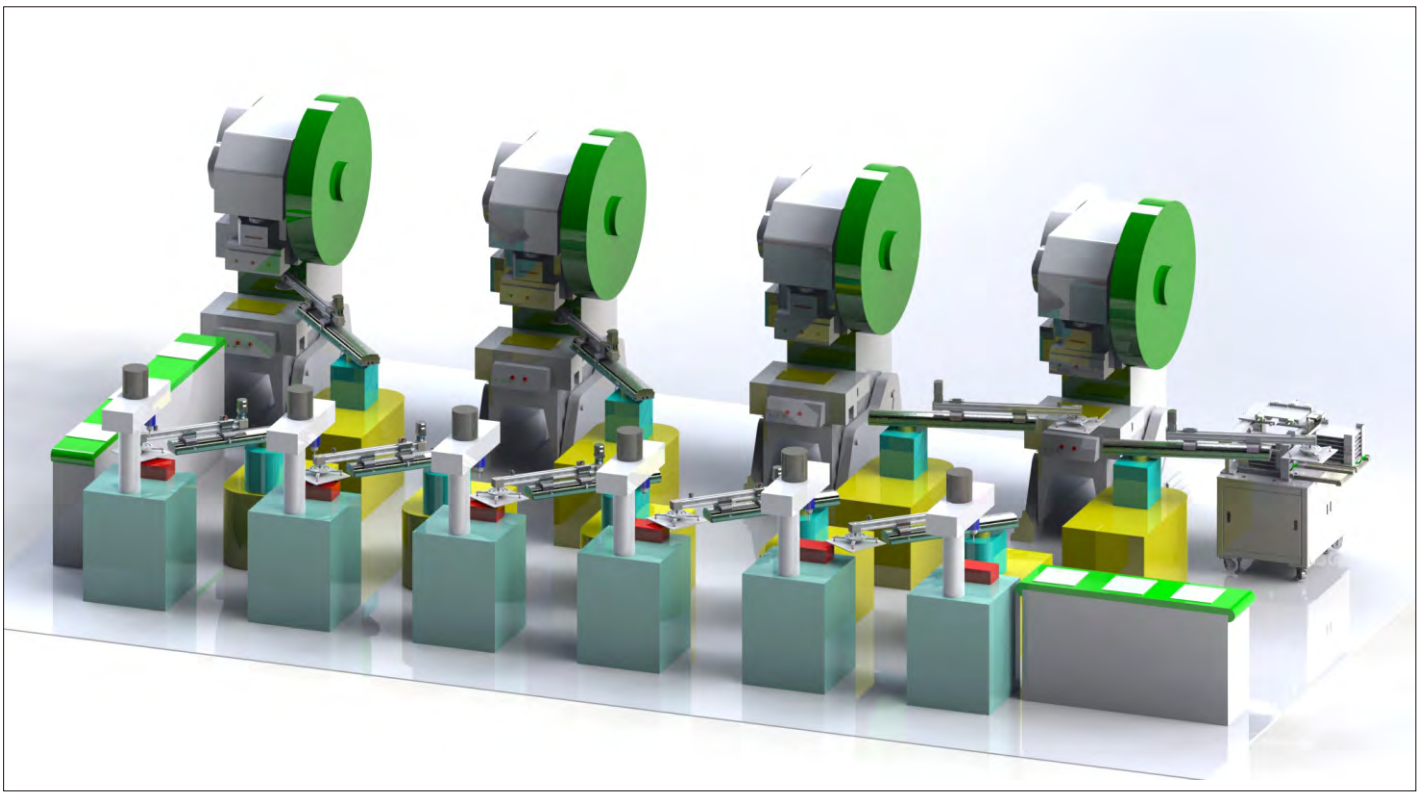

Punching

Applications

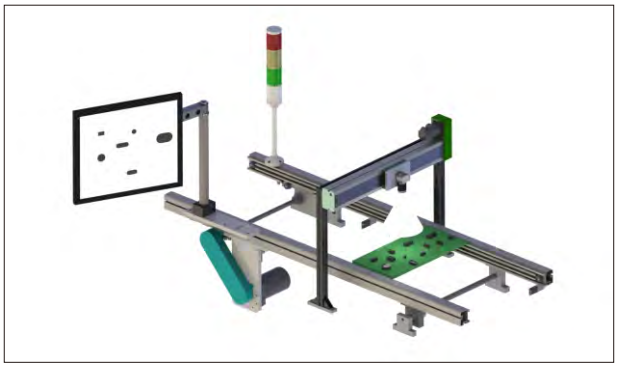

PCB testing

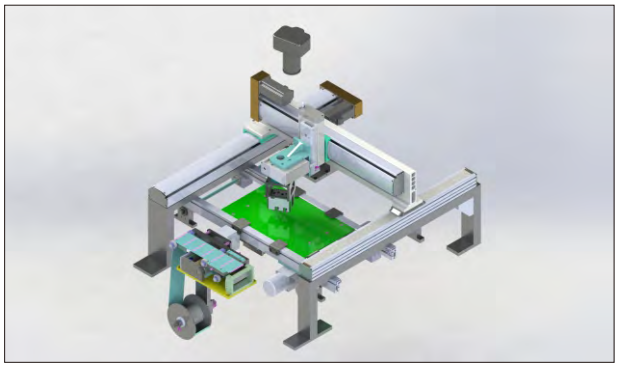

PCB labelling

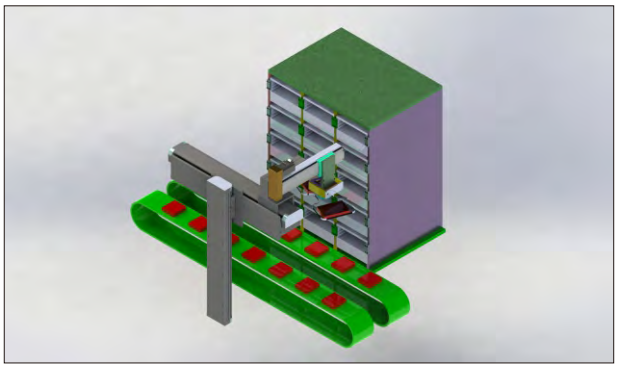

Products inside the shielded box loading & unloading

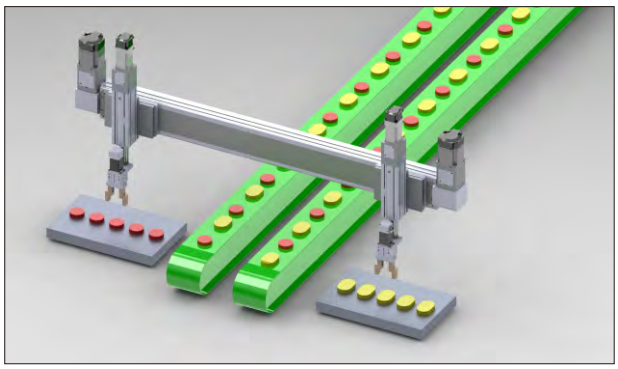

Multiple production lines with various products loading operation

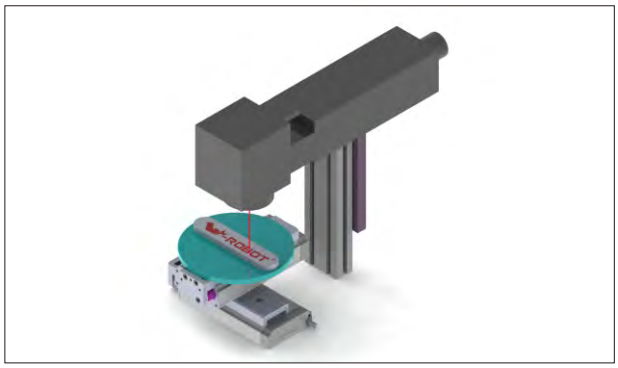

Laser marking

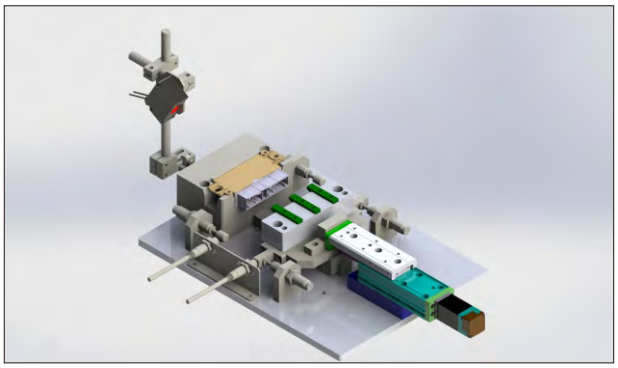

The connector insertion and pull test

Applications

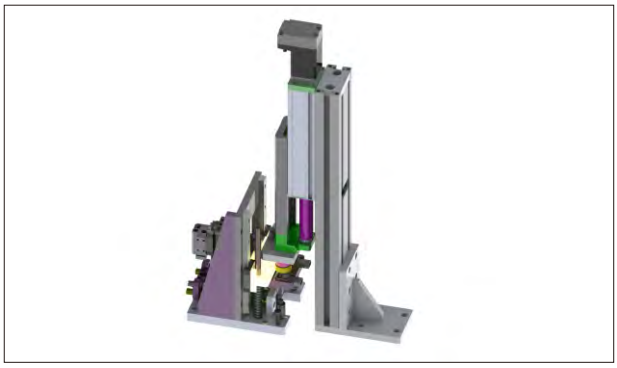

Pressing fit parts in a thrust

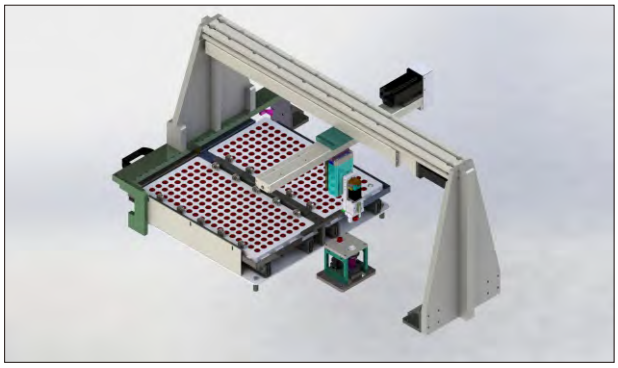

Picking and positioning auto parts

Sticking a mobile phone screen

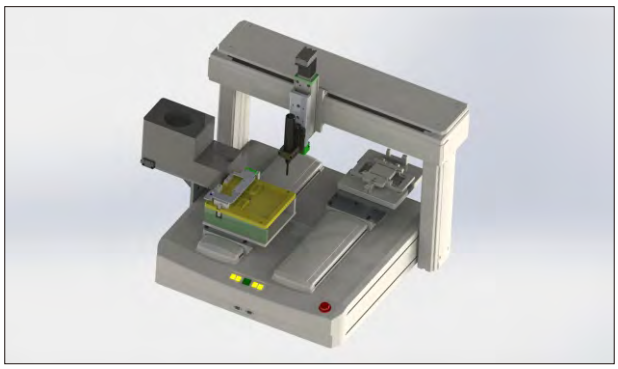

Automatic screw locking machine

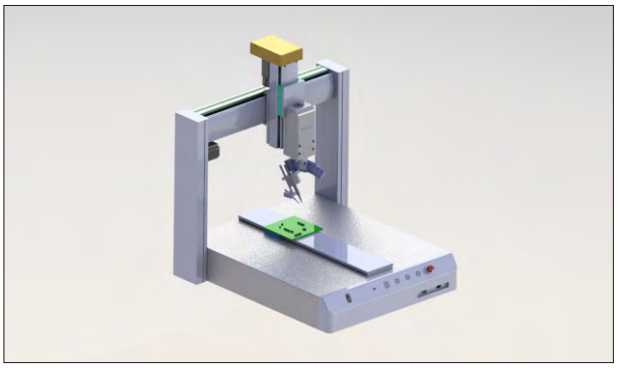

Automatic PCB welding operation

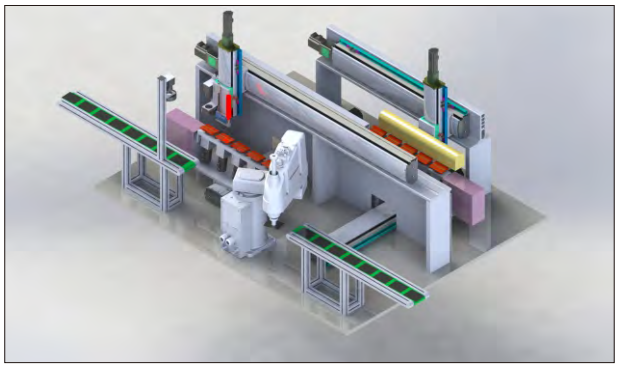

Flexible positioning and high speed precise dispensing

Multiple connections of input end

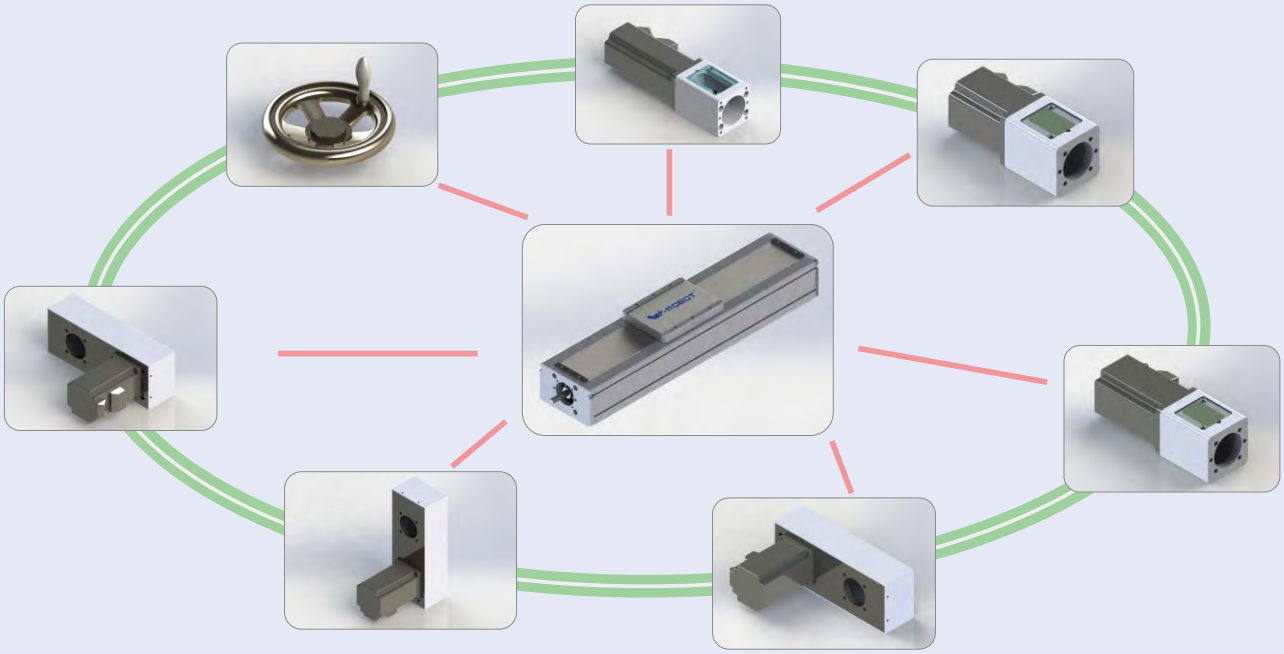

Multiple input available , High interchangeability,
No effect on Length of modules

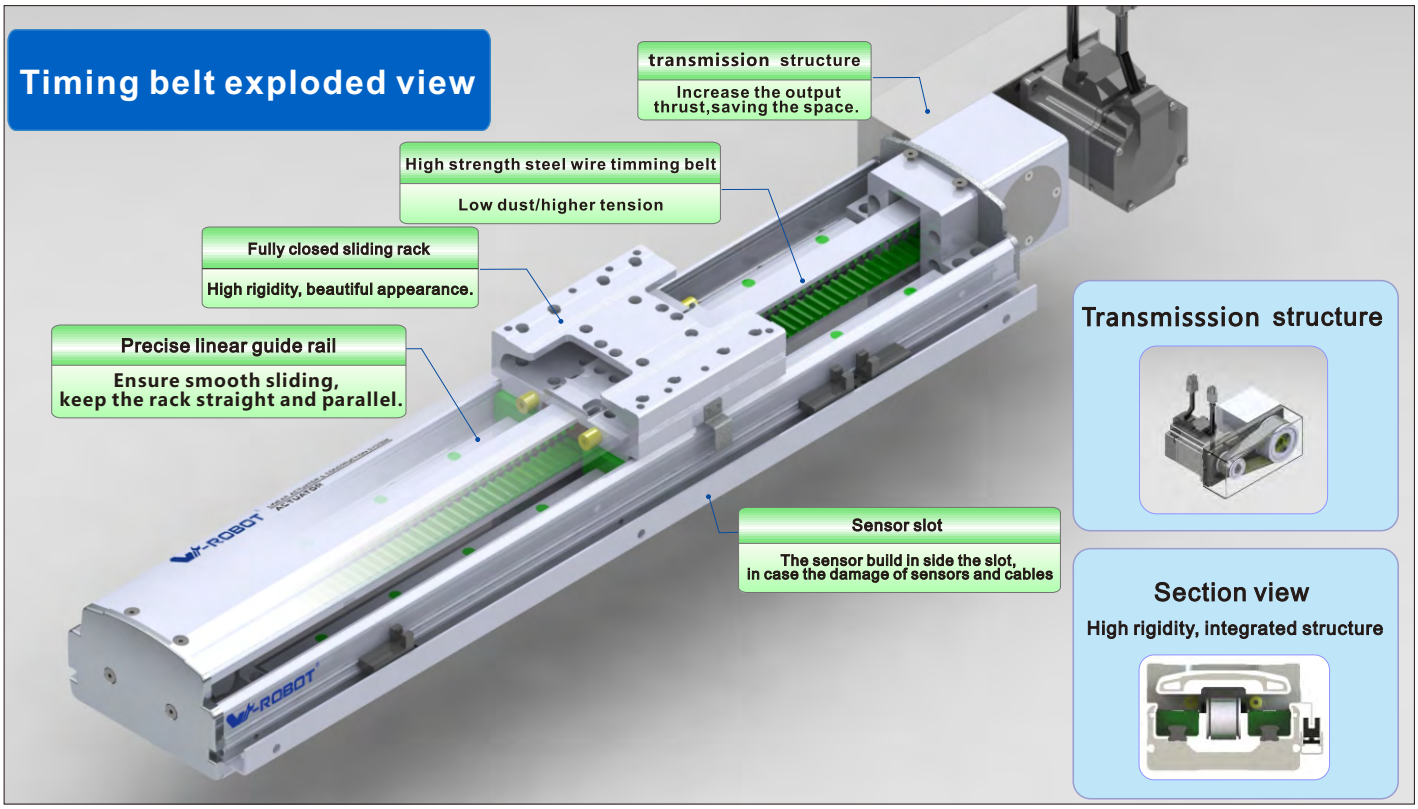
Timing belt exploded view
transmission structure
Increase the output thrust,saving the space.
High strength steel wire timming belt
Low dust/higher tension
Fully closed sliding rack
High rigidity, beautiful appearance.
Precise linear guide rail
Ensure smooth sliding, keep the rack straight and parallel.
Sensor slot
The sensor build in side the slot, in case the damage of sensors and cables
Transmisssion structure
Section view
High rigidity, integrated structure

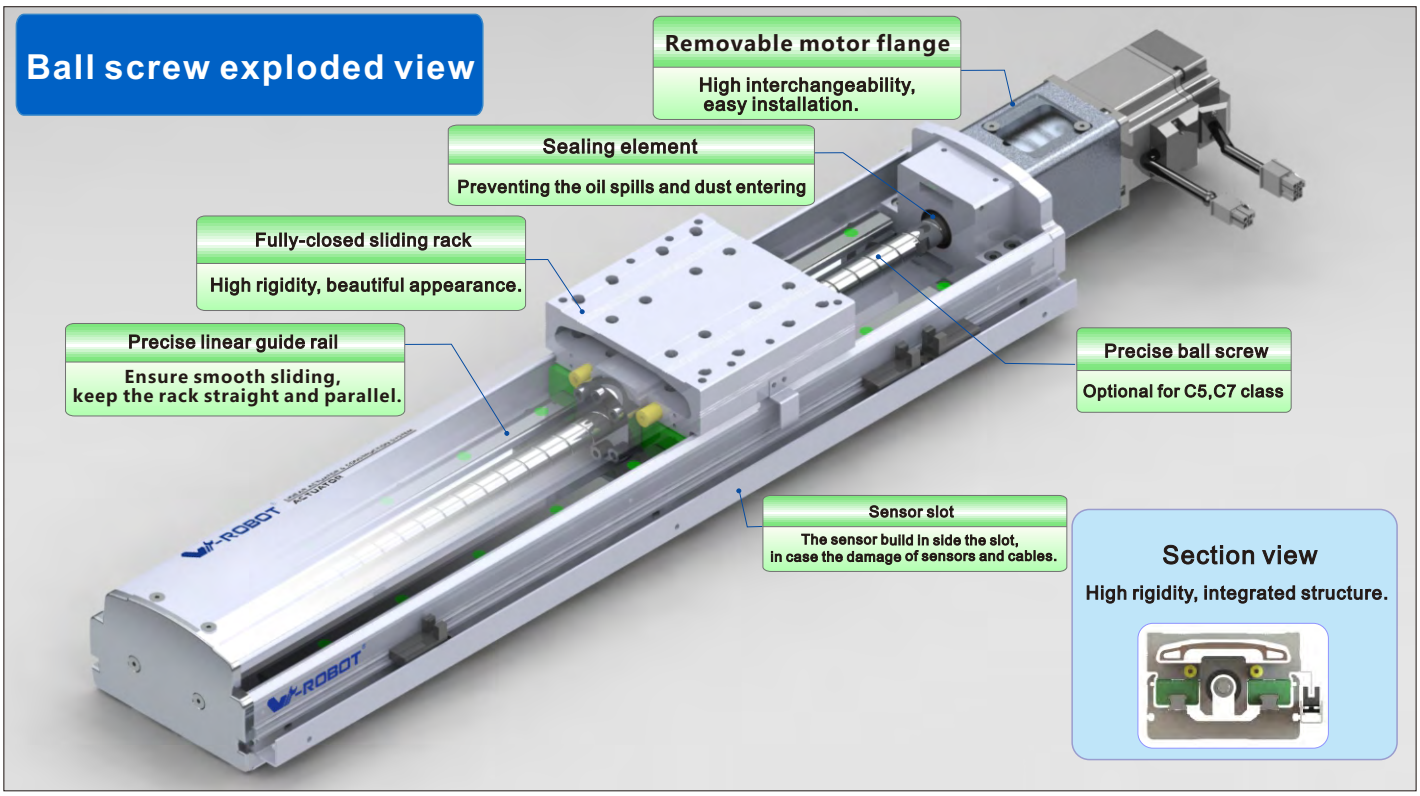
Ball screw exploded view
Removable motor flange
High interchangeability, easy installation.
Sealing element
Preventing the oil spills and dust entering
Fully-closed sliding rack
High rigidity, beautiful appearance.
Precise linear guide rail
Ensure smooth sliding, keep the rack straight and parallel.
Precise ball screw
Optional for C5,C7 class
Sensor slot
The sensor build in side the slot, in case the damage of sensors and cables.
Section view
High rigidity, integrated structure.

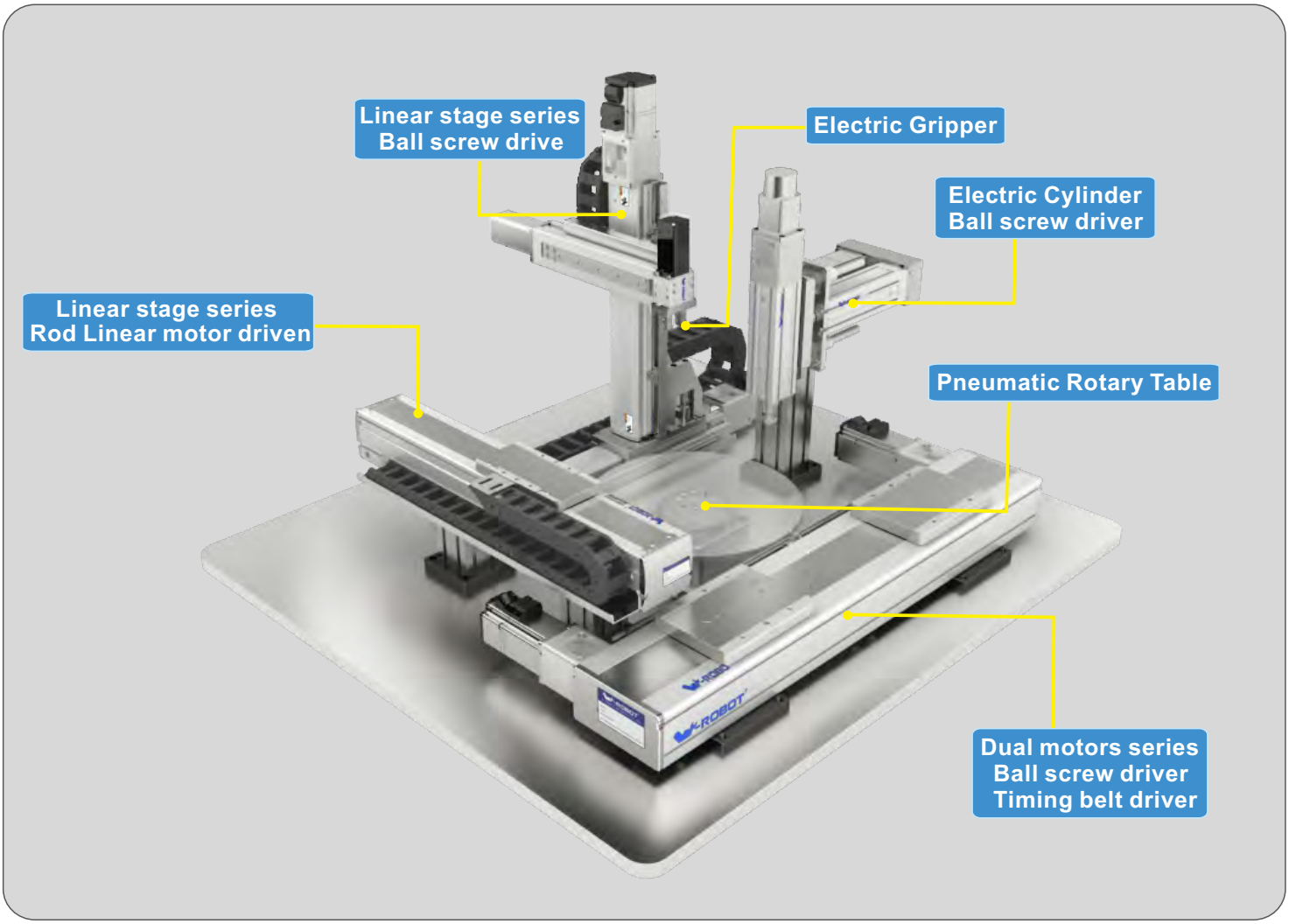
Linear stage series
Ball screw drive
Electric Gripper
Electric Cylinder
Ball screw driver
Linear stage series
Rod Linear motor driven
Pneumatic Rotary Table
Dual motors series
Ball screw driver
Timing belt driver

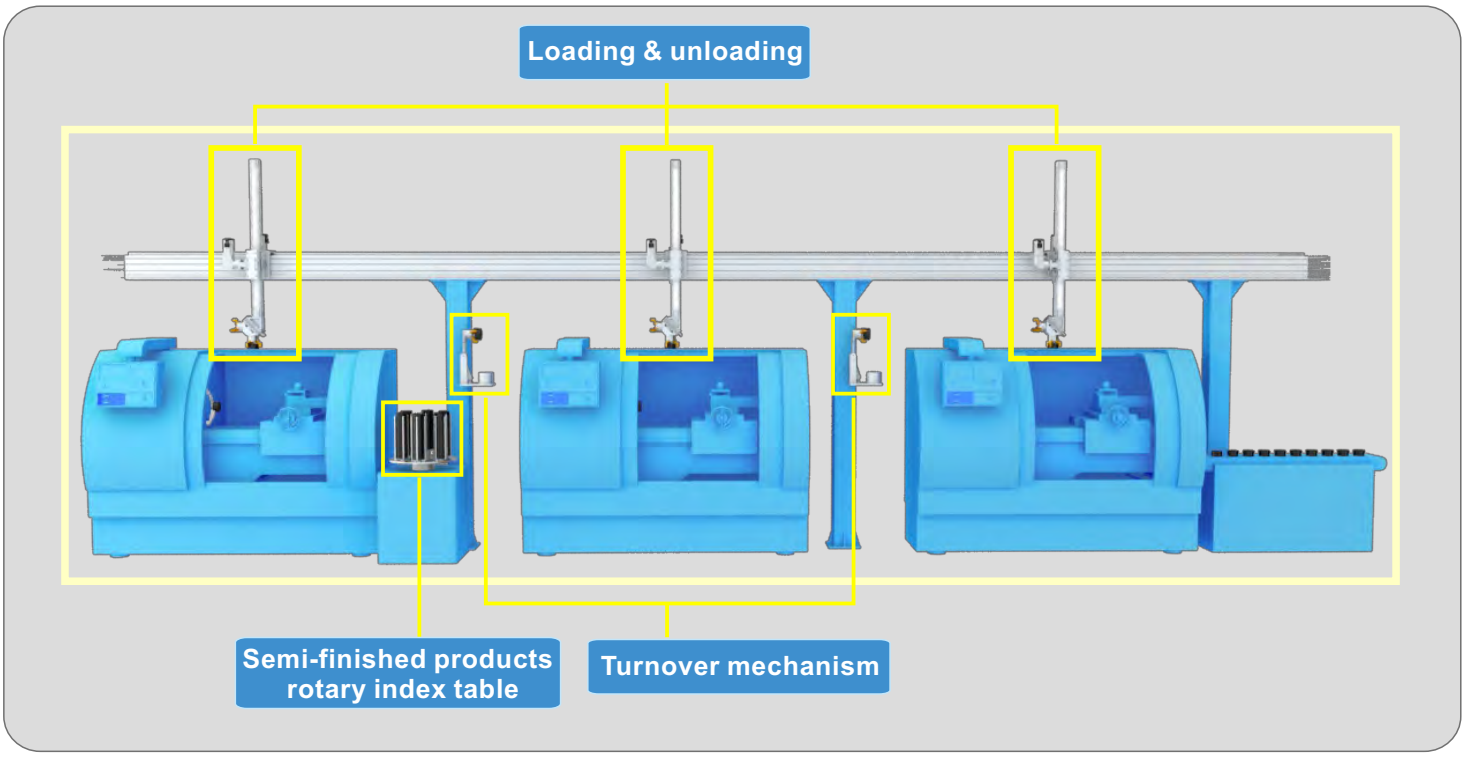
Loading & unloading
Semi-finished products
rotary index table
Turnover mechanism

Dual Motors Series

Pick & place on multi-station conveyor

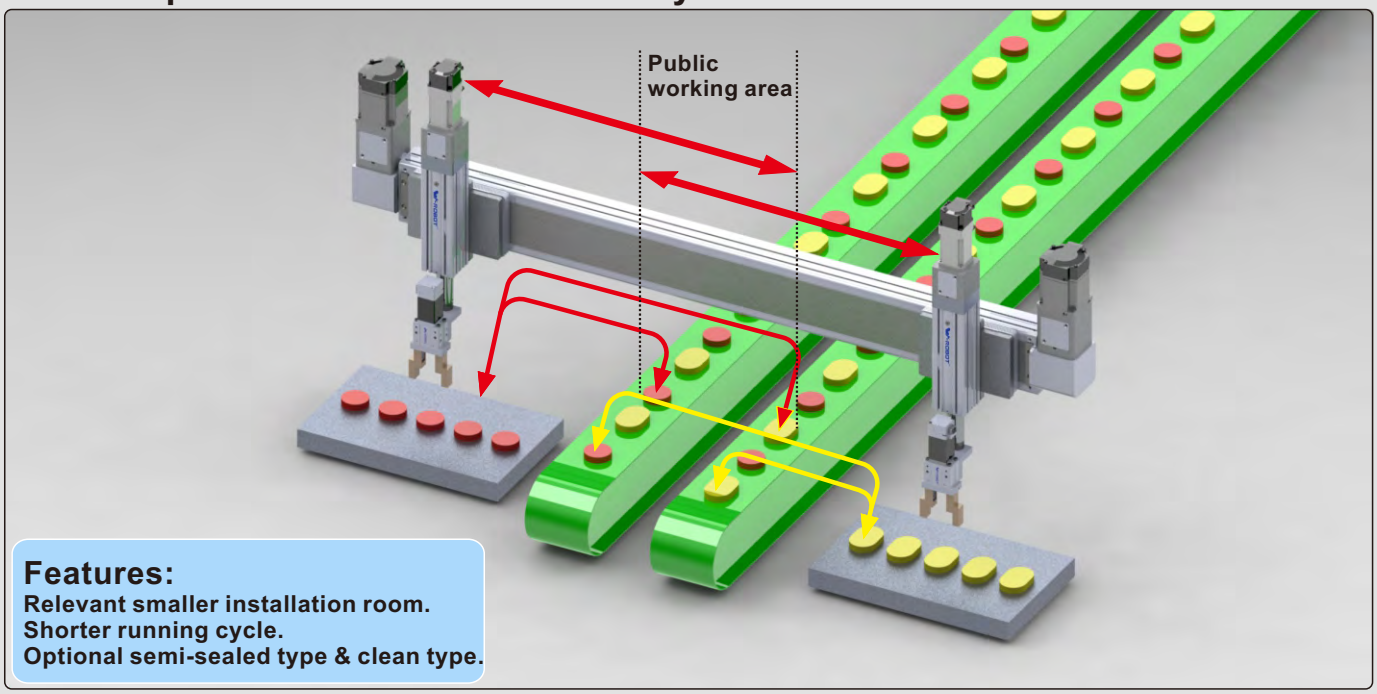

Features:
Relevant smaller installation room.
Shorter running cycle.
Optional semi-sealed type & clean type.

Loading & unloading on the multi-station testing equipment

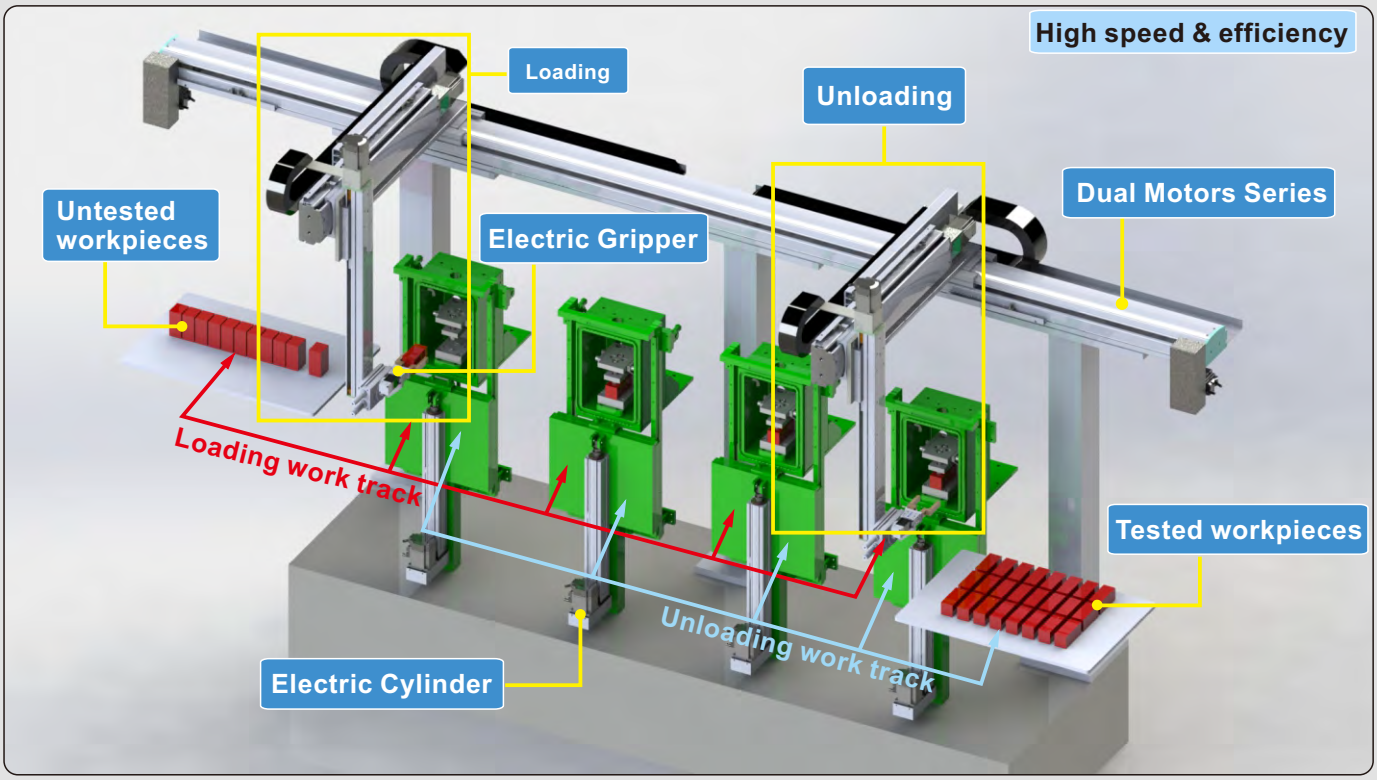

The motor connecting flange >>>

Type	The motor connecting flange drawing	Motor size	Motor power	Motor shaft dia.	Motor brand	Reference No.
F1	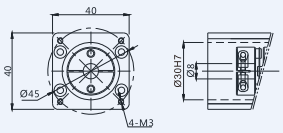	□38	100W	Ø8	Panasonic	MSMD012G1U
F2	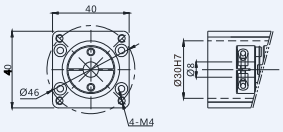	□40	100W	Ø8	Mitsubishi Yaskawa Delta Sankyo	HF-KN13 SGMJV-01ADA21 ECMA-C20401 MA101N2KN
F3	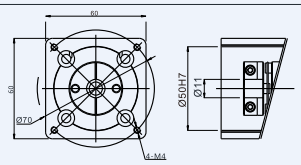	□60	200W	Ø11	Panasonic	MSMJ022G1U MHMJ022G1U
F4	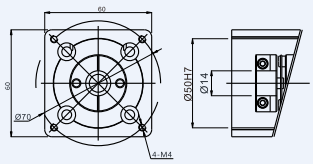	□60	400W	Ø14	Panasonic	MSMJ042G1U MHMJ042G1U
F5	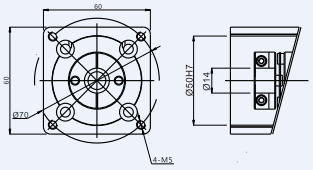	□60	200W 400W	Ø14 Ø14	Mitsubishi	HF-KN23 HF-KN43
					Yaskawa	SGMJV-02ADA21 SGMJV-04ADA21
					Delta	ECMA-C20602 ECMA-C20604
					Sankyo	MA201N2KN MA401N2KN
F6	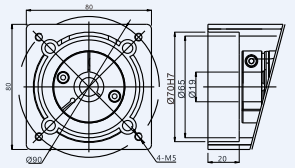	□80	750W	Ø19	Panasonic	MSMJ082G1U MHMJ082G1U
F7	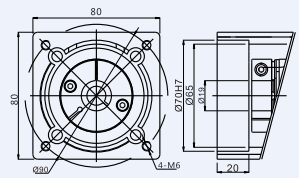	□80	750W	Ø19	Mitsubishi	HF-KN73
					Yaskawa	SGMJV-08ADA21
					Delta	ECMA-C20807
					Sankyo	MA751N2KN
F8	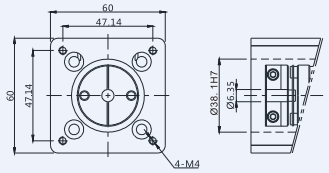	□56.4	57 Motor	Ø6.35	JMC	57J1876
					Leadshine	57HS09
F9	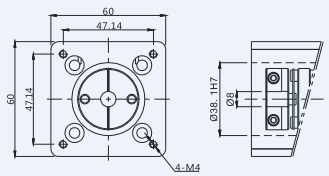	□56.4	57 Motor	Ø8	JMC	57J1880
					Leadshine	57HS22
					Oriental	PK266PA

VF2B20-A1

Maximum Stroke

X axis	950mm
Y axis	350mm

Maximum Speed

X axis	800mm/s
Y axis	800mm/s

Maximum Stroke

X axis	200W
Y axis	100W

Specification

Ltem	X axi	Y axi
Axis Construction	VF8 (Longer sliding rack)	VF6
Repeatability(mm)	±0.01(C7)	±0.01(C7)
BallScrewLead(mm)	16	16
MaximumSpeed(mm/sec)	800	800
Stroke(mm)	100-950	100-350
ServoMotorOutput(W)	200W	100W
Environment	0-40℃,85%RH Below	

Maximum Payload

Y Stroke	100	150	200	250	300	350
Y Stoke Payload	5	4	3.5	3	2.5	2

Guide for Model Selection

VF2B20 - A 1 - 300 BC - 300 BR - P - C -

Model

Combination	
A	Arm Type

Combination Direction	
1	Left X axi base fixed and Y axi forward direction
2	Left X axi base fixed and Y axi reverse direction
3	Right X axi base fixed and Y axi forward direction
4	Right X axi base fixed and Y axi reverse direction

X Stroke(mm)
100-950mm

Motor way	
BC	External
BR	Right Side
BL	Left Side

Y Stroke(mm)
100-350mm

Motor Type	
P	Panasonic
M	Mitsubishi
Y	Yaskawa
T	Delta
W	W-Robot

*For Z: Motor is from clients.

Delivery Methode	
K	By Kit
C	By Set

Non-standard, d.c.,	
No	No.d.c.,
A01	Conbination of customization

VF2B20-A1

W-ROBOT® Linear Drives

Arm type with 2-axis(A)

Unit (mm)

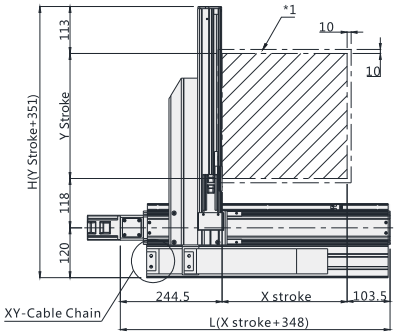

XY-Cable Chain

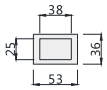

A-Detail View

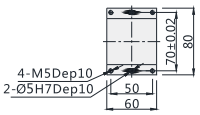

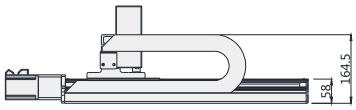

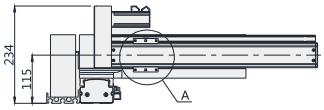

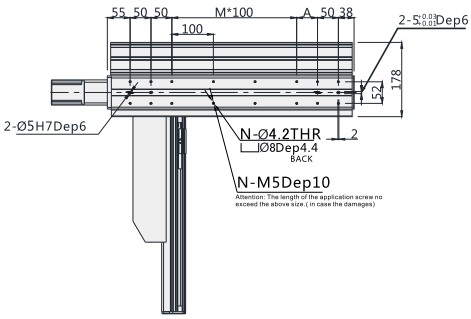

*1: (When the moving range return to origin,the stop position of table`s movement range and mechanical limit.)

*2: (Maximum speed is refers to the highest safe speed that can be used in stroke,if more than the standard speed,table may produce serious resonance.)

X Stroke(mm)	100	150	200	250	300	350	400	450	500	550	600	650	700	750	800	850	900	950
L	448	498	548	598	648	698	748	798	848	898	948	998	1048	1098	1148	1198	1248	1298
M	1	1	2	2	3	3	4	4	5	5	6	6	7	7	8	8	9	9
N	12	12	14	14	16	16	18	18	20	20	22	22	24	24	26	26	28	28
A	50	100	50	100	50	100	50	100	50	100	50	100	50	100	50	100	50	100
MaximumSpeed(mm/s)	800														700	600	500	400

Y Stroke(mm)	100	150	200	250	300	350
H	451	501	551	601	651	701
MaximumSpeed(mm/s)	800					

Combination Direction

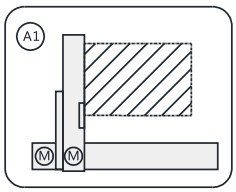

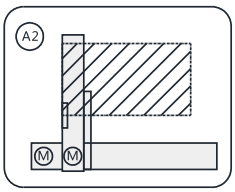

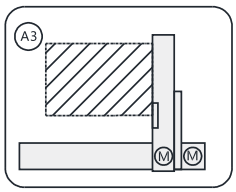

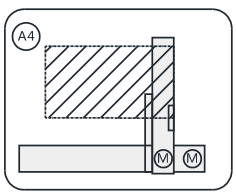

VF32B2-A1

Maximum Stroke

X axi	950mm
Y axi	350mm
Z axi	300mm

Maximum Speed

X axi	800mm/s
Y axi	800mm/s
Z axi	500mm/s

Maximum Stroke

X axi	400W
Y axi	100W
Z axi	100W+(Brake)

Specification

Ltem	X axi	Y axi	Z axi
Axis Construction	VF10 (Longer sliding rack)	VF8	VF6
Repeatability(mm)	±0.01(C7)	±0.01(C7)	±0.01(C7)
BallScrewLead(mm)	16	16	10
MaximumSpeed(mm/sec)	800	800	500
Stroke(mm)	100-950	100-350	100-300
ServoMotorOutput(W)	400W	100W	100W+(Brake)
Environment	0-40℃,85%RH Below		

最大载重 Maximum Payload

	Y Stroke(mm)				
Z Stoke Payload	100	150	200	250	300
100	5	5	4	3	2
150	5	5	4	3	2
200	5	4	3	3	2
250	5	4	3	3	2
300	5	4	3	2	2

Guide for Model Selection

VF32B2 - A 1 - 300 BC - 300 BR - 150 BL - P - C - _____

Model

Combination	
A	Arm Type

Combination Direction	
1	Left X axis base fixed and Y axis forward direction
2	Left X axis base fixed and Y axis reverse direction
3	Right X axis base fixed and Y axis forward direction
4	Right X axis base fixed and Y axis reverse direction

X Stroke(mm)
100-950mm

Y Stroke(mm)
100-350mm

Motor way	
BC	External
BR	Right Side
BL	Left Side

Z Stroke(mm)
100-300mm

Motor Type	
P	Panasonic
M	Mitsubishi
Y	Yaskawa
T	Delta
W	W-Robot

*For Z: Motor is from clients.

Delivery Methode	
K	By Kit
C	By Set

Non-standard, d.c.,	
No	No.d.c.,
A01	Conbination of customization

VF32B2-A1

W-ROBOT® Linear Drives

Arm type with 3-axis(A)

Unit (mm)

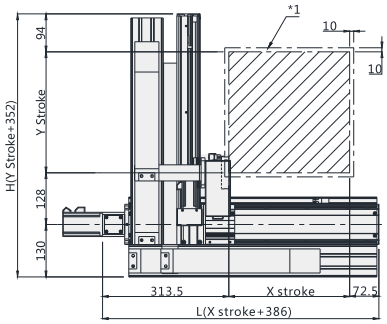

XY-Cable Chain

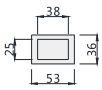

A-Detail View

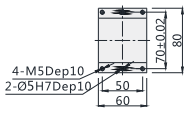

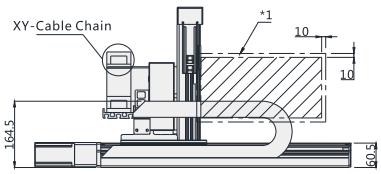

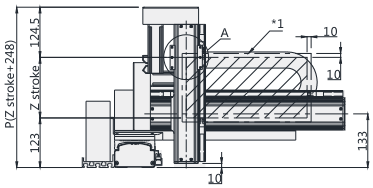

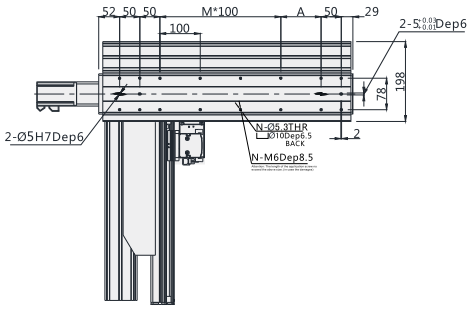

(When the moving range return to origin,the stop position of table`s movement range and mechanical limit.)

(Maximum speed is refers to the highest safe speed that can be used in stroke,if more than the standard speed,table may produce serious resonance.)

X Stroke(mm)	100	150	200	250	300	350	400	450	500	550	600	650	700	750	800	850	900	950
L	486	536	586	636	686	736	786	836	886	936	986	1036	1086	1136	1186	1236	1286	1336
M	1	2	2	3	3	4	4	5	5	6	6	7	7	8	8	9	9	10
N	12	14	14	16	16	18	18	20	20	22	22	24	24	26	26	28	28	30
A	100	50	100	50	100	50	100	50	100	50	100	50	100	50	100	50	100	50
MaximumSpeed(mm/s)	800														700	650	600	550

Y Stroke(mm)	100	150	200	250	300	350
H	452	502	552	602	652	702
MaximumSpeed(mm/s)	800					

Z Stroke(mm)	100	150	200	250	300
P	348	398	448	498	548
MaximumSpeed(mm/s)	500				

Combination Direction

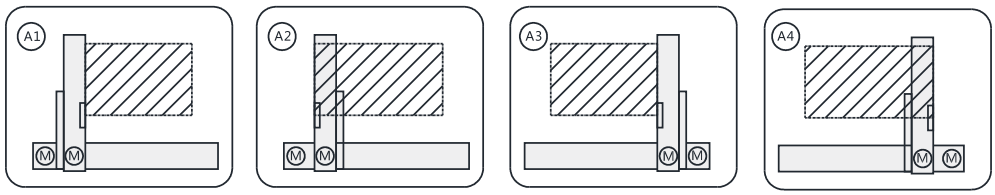

VF432B-A1

Maximum Stroke

X axi	1100mm
Y axi	500mm
Z axi	350mm

Maximum Speed

X axi	800mm/s
Y axi	800mm/s
Z axi	500mm/s

Maximum Stroke

X axi	400W
Y axi	400W
Z axi	200W+(Brake)

Specification

Ltem	X axi	Y axi	Z axi
Axi Construction	VF12 (Longer sliding rack)	VF10	VF8
Repeatability(mm)	±0.01(C7)	±0.01(C7)	±0.01(C7)
BallScrewLead(mm)	16	16	10
MaximumSpeed(mm/sec)	800	800	500
Stroke(mm)	100-1100	100-500	100-350
AC ServoMotorOutput(W)	400W	400W	200W+(Brake)
Environment	0-40℃,85%RH Below		

Maximum Payload

	Y Stroke(mm)				
Z Stoke Payload (kg)	100	200	300	400	500
150	6	6	5	4	3
200	6	6	5	4	3
250	6	5	4	3	2
300	6	5	4	3	2
350	5	4	3	2	1

Guide for Model Selection

VF432B - A 1 - 300 BC - 300 BR - 200 BL - P - C - _____

Model

Combination	
A	Arm Type

Combination Direction	
1	Left X axis base fixed and Y axis forward direction
2	Left X axis base fixed and Y axis reverse direction
3	Right X axis base fixed and Y axis forward direction
4	Right X axis base fixed and Y axis reverse direction

X Stroke(mm)
100-1100mm

Y Stroke(mm)
100-500mm

Motor way	
BC	External
BR	Right Side
BL	Left Side

Z Stroke(mm)
100-350mm

Motor Type	
P	Panasonic
M	Mitsubishi
Y	Yaskawa
T	Delta
W	W-Robot

*For Z: Motor is from clients.

Delivery Methode	
K	By Kit
C	By Set

Non-standard, d.c.,	
No	No.d.c.,
A01	Conbination of customization

VF432B-A1

W-ROBOT® Linear Drives

Arm type with 3-axis(A)

Unit (mm)

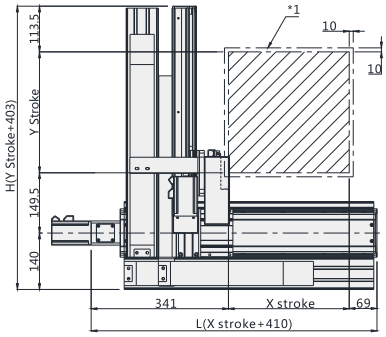

XY-Cable Chain

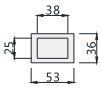

A-Detail View

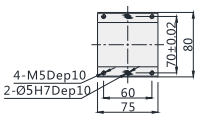

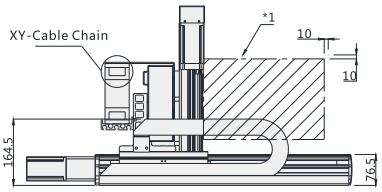

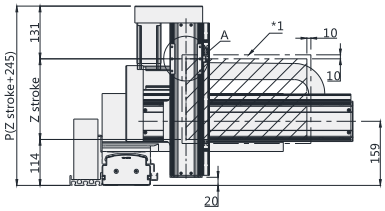

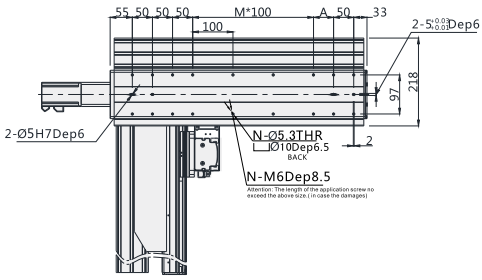

*1: When the moving range return to origin,the stop position of table`s movement range and mechanical limit.

*2: Maximum speed is refers to the highest safe speed that can be used in stroke,if more than the standard speed,table may produce serious resonance.

X Stroke(mm)	100	150	200	250	300	350	400	450	500	550	600	650	700	750	800	850	900	950	1000	1050	1100
L	510	560	610	660	710	760	810	860	910	960	1010	1060	1110	1160	1210	1260	1310	1360	1410	1460	1510
M	1	1	2	2	3	3	4	4	5	5	6	6	7	7	8	8	9	9	10	10	11
N	14	14	16	16	18	18	20	20	22	22	24	24	26	26	28	28	30	30	32	32	34
A	50	100	50	100	50	100	50	100	50	100	50	100	50	100	50	100	50	100	50	100	50
MaximumSpeed(mm/s)	800														720	640	560	480	450	320	290

Y Stroke(mm)	100	150	200	250	300	350	400	450	500
H	503	553	603	653	703	753	803	853	903
MaximumSpeed(mm/s)	800								

Z Stroke(mm)	100	150	200	250	300	350
P	345	395	445	495	545	595
MaximumSpeed(mm/s)	500					

Combination Direction

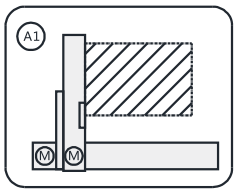

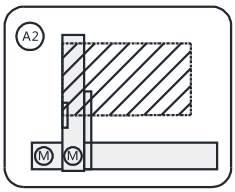

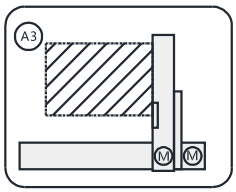

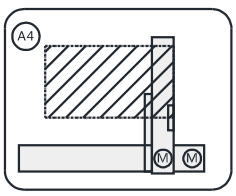

VF643-A1

Maximum Stroke

X axi	1200mm
Y axi	550mm
Z axi	350mm

Maximum Speed

X axi	1000mm/s
Y axi	800mm/s
Z axi	500mm/s

Maximum Stroke

X axi	400W
Y axi	400W
Z axi	200W+Brake

Specification

Ltem	X axi	Y axi	Z axi
Axis Construction	VF14 (Longer sliding rack)	VF12	VF10
Repeatability(mm)	±0.01(C7)	±0.01(C7)	±0.01(C7)
BallScrewLead(mm)	20	16	10
MaximumSpeed(mm/sec)	1000	1000	500
Stroke(mm)	100-1200	100-550	100-350
AC ServoMotorOutput(W)	400W	400W	200W+Brake
Environment	0-40℃,85%RH Below		

Maximum Payload

	Y Stroke(mm)					
Z Stoke Payload	100	200	300	400	500	600
150	12	10	8	7	5	3
200	12	10	8	7	5	3
250	12	9	7	6	4	2
350	12	9	7	6	4	2
350	11	8	6	5	3	1

Guide for Model Selection

VF643 - A 1 - 400 BC - 400 BR - 250 BL - P - C - _____

Model

Combination	
A	Arm Type

Combination Direction	
1	Left X axis base fixed and Y axis forward direction
2	Left X axis base fixed and Y axis reverse direction
3	Right X axis base fixed and Y axis forward direction
4	Right X axis base fixed and Y axis reverse direction

X Stroke(mm)
100-1200mm

Y Stroke(mm)
100-550mm

Motor way	
BC	External
BR	Right Side
BL	Left Side

Z Stroke(mm)
100-350mm

Motor Type	
P	Panasonic
M	Mitsubishi
Y	Yaskawa
T	Delta
W	W-Robot

*For Z: Motor is from clients.

Delivery Methode	
K	By Kit
C	By Set

Non-standard, d.c.,	
No	No.d.c.,
A01	Conbination of customization

VF643-A1

W-ROBOT® Linear Drives

Arm type with 3-axis(A)

Unit (mm)

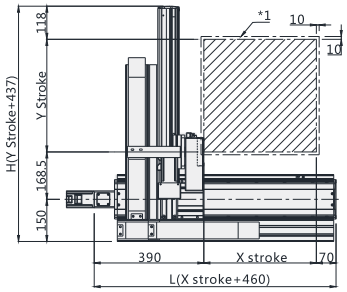

XY-Cable Chain

A-Detail View

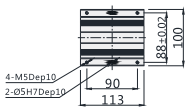

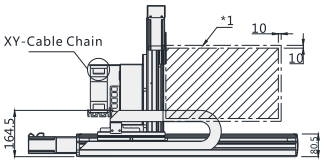

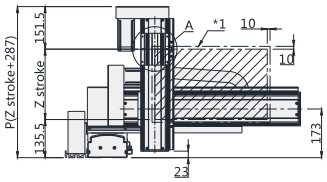

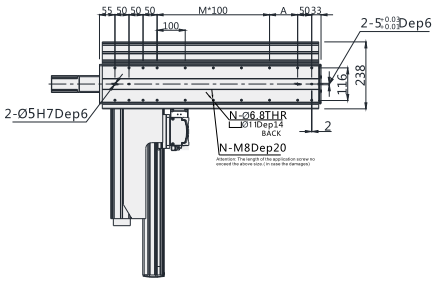

*1: When the moving range return to origin,the stop position of table`s movement range and mechanical limit.

*2: Maximum speed is refers to the highest safe speed that can be used in stroke,if more than the standard speed,table may produce serious resonance.

X Stroke(mm)	100	150	200	250	300	350	400	450	500	550	600	650	700	750	800	850	900	950	1000	1050	1100	1150	1200
L	560	610	660	710	760	810	860	910	960	1010	1060	1110	1160	1210	1260	1310	1360	1410	1460	1510	1560	1610	1660
M	1	2	2	3	3	4	4	5	5	6	6	7	7	8	8	9	9	10	10	11	10	11	11
N	14	16	16	18	18	20	20	22	22	24	24	26	26	28	28	30	30	32	32	34	32	34	34
A	100	50	100	50	100	50	100	50	100	50	100	50	100	50	100	50	100	50	100	50	100	50	100
MaximumSpeed(mm/s)	1000														900		800		700		600		500

Y Stroke(mm)	100	150	200	250	300	350	400	450	500	550
H	537	587	637	687	737	787	837	887	937	987
MaximumSpeed(mm/s)	800									

Z Stroke(mm)	100	150	200	250	300	350
P	387	437	487	537	587	637
MaximumSpeed(mm/s)	500					

Combination Direction

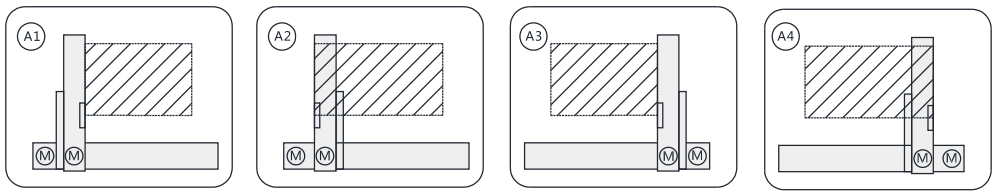

VF764-A1

Maximum Stroke

X axi	1200mm
Y axi	600mm
Z axi	350mm

Maximum Speed

X axi	1000mm/s
Y axi	1000mm/s
Z axi	500mm/s

Maximum Stroke

X axi	400W
Y axi	400W
Z axi	400W+(Brake)

Specification

Ltem	X axi	Y axi	Z axi
Axis Construction	VF17 (Longer sliding rack)	VF14	VF12
Repeatability(mm)	±0.01(C7)	±0.01(C7)	±0.01(C7)
BallScrewLead(mm)	20	20	10
MaximumSpeed(mm/sec)	1000	1000	500
Stroke(mm)	100-1200	100-600	100-350
AC ServoMotorOutput(W)	400W	400W	400W+(Brake)
Environment	0-40℃,85%RH Below		

Maximum Payload

Y Stroke(mm)						
Z Stoke Payload	100	200	300	400	500	600
150	16	14	12	10	8	6
200	16	14	12	10	8	6
250	15	13	11	9	7	5
300	14	13	11	9	7	5
350	14	12	10	8	6	4

Guide for Model Selection

VF764 - A 1 - 500 BC - 500 BR - 300 BL - P - C - _____

Model

Combination	
A	Arm Type

Combination Direction	
1	Left X axis base fixed and Y axis forward direction
2	Left X axis base fixed and Y axis reverse direction
3	Right X axis base fixed and Y axis forward direction
4	Right X axis base fixed and Y axis reverse direction

X Stroke(mm)
100-1200mm

Y Stroke(mm)
100-600mm

Motor way	
BC	External
BR	Right Side
BL	Left Side

Z Stroke(mm)
100-350mm

Motor Type	
P	Panasonic
M	Mitsubishi
Y	Yaskawa
T	Delta
W	W-Robot

*For Z: Motor is from clients.

Delivery Methode	
K	By Kit
C	By Set

Non-standard, d.c.,	
No	No.d.c.,
A01	Conbination of customization

VF764-A1

W-ROBOT® Linear Drives

Arm type with 3-axis(A)

Unit (mm)

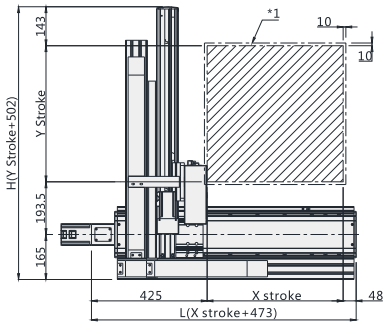

XY-Cable Chain

A-Detail View

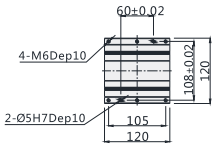

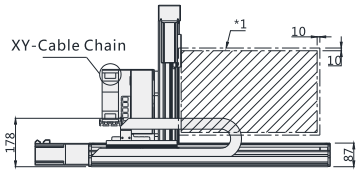

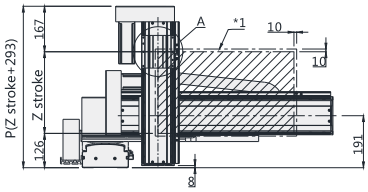

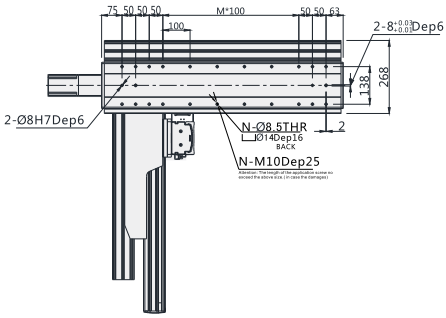

*1: When the moving range return to origin,the stop position of table`s movement range and mechanical limit.

*2: Maximum speed is refers to the highest safe speed that can be used in stroke,if more than the standard speed,table may produce serious resonance.

X Stroke(mm)	100	150	200	250	300	350	400	450	500	550	600	650	700	750	800	850	900	950	1000	1050	1100	1150	1200
L	573	623	673	723	773	823	873	923	973	1023	1073	1123	1173	1223	1273	1323	1373	1423	1473	1523	1573	1623	1673
M	1	1	2	2	3	3	4	4	5	5	6	6	7	7	8	8	9	9	10	10	11	10	11
N	14	14	16	16	18	18	20	20	22	22	24	24	26	26	28	28	30	30	32	32	34	32	34
A	50	100	50	100	50	100	50	100	50	100	50	100	50	100	50	100	50	100	50	100	50	100	50
MaximumSpeed(mm/s)	1000														900	900	800	800	700	700	600	600	500

Y Stroke(mm)	100	150	200	250	300	350	400	450	500	550	600
H	602	652	702	752	802	852	902	952	1002	1052	1102
MaximumSpeed(mm/s)	1000										

Z Stroke(mm)	100	150	200	250	300	350
P	393	443	493	543	593	643
MaximumSpeed(mm/s)	500					

Combination Direction

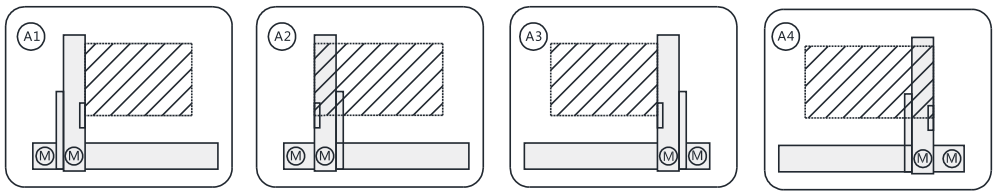

Cantilever 4 Axis Robot

VFA01

Maximum Stroke	X axis 300mm Y axis 300mm Z axis 150mm R axis 360°
Maximum Payload	1KG
Body Width	VF10 100mm VF8 80mm VF6 60mm R01 80mm

296

VFA05

Maximum Stroke	X axis 300mm Y axis 300mm Z axis 150mm R axis 360°
Maximum Payload	5KG
Body Width	VF12 120mm VF10 100mm VF8 80mm R05 90mm

297

VFA10

Maximum Stroke	X axis 400mm Y axis 400mm Z axis 150mm R axis 360°
Maximum Payload	10KG
Body Width	VF14 140mm VF12 120mm VF10 100mm R15 97mm

298

VFA15

Maximum Stroke	X axis 500mm Y axis 500mm Z axis 250mm R axis 360°
Maximum Payload	15KG
Body Width	VF17 170mm VF14 140mm VF12 120mm R15 97mm

299

VFA01 4 axes

W-ROBOT® Linear Drives

Technical parameters

Ltem	X axis	Y axis	Z axis	R axis
Axis Construction	VF10 (Longer sliding rack)	VF8	VF6	R01
Worksing Stroke(XYZ:mm)(R:°)	300	300	150	360
Repeatability(XYZ:mm)(R:°)	±0.01(C7)	±0.01(C7)	±0.01(C7)	±0.02
Drive Type	BallScrew(C7)	BallScrew(C7)	BallScrew(C7)	Planetary Gear
BallScrewLead(mm)	20	20	10	1/10
MaximumSpeed(mm/sec)(R:°/sec)	1000	1000	500	360
ServoMotorOutput(W)	400W	100W	100W+(Brake)	100W
Payload(Kg)	1Kg			
Environment	0-40℃,85%RH Below			

VF01 4axes

Unit(mm)

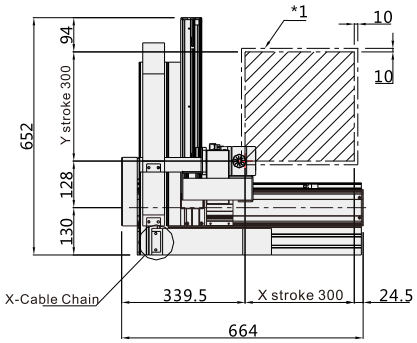

X-Cable Chain

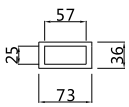

Y-Cable Chain

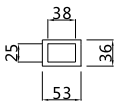

Z-Cable Chain

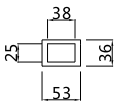

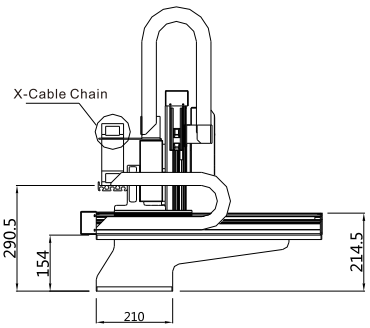

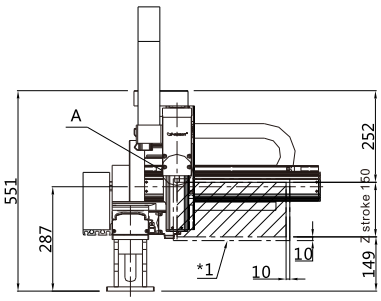

Detail View A

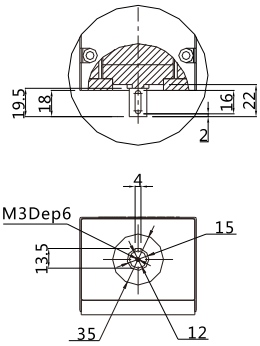

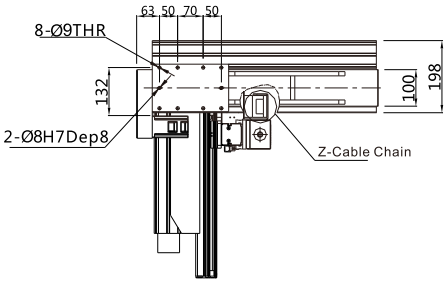

*1:When the moving range return to origin,the stop position of table`s movement range and mechanical limit.

VFA05 4 axes

Technical parameters

Ltem	X axis	Y axis	Z axis	R axis
Axis Construction	VF12 (Longer sliding rack)	VF10	VF8	R05
Worksing Stroke(XYZ:mm)(R:°)	300	300	150	360
Repeatability(XYZ:mm)(R:°)	±0.01(C7)	±0.01(C7)	±0.01(C7)	±0.02
Drive Type	BallScrew(C7)	BallScrew(C7)	BallScrew(C7)	Planetary Gear
BallScrewLead(mm)	20	20	10	1/10
MaximumSpeed(mm/sec)(R:°/sec)	1000	1000	500	360
ServoMotorOutput(W)	400W	200W	200W+(Brake)	200W
Payload(Kg)	5Kg			
Environment	0-40℃,85%RH Below			

VF05 4axes

Unit(mm)

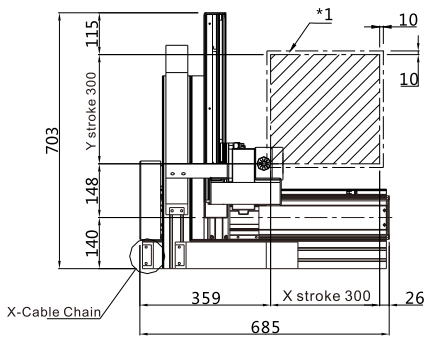

X-Cable Chain

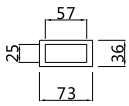

Y-Cable Chain

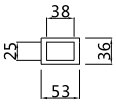

Z-Cable Chain

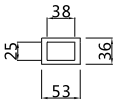

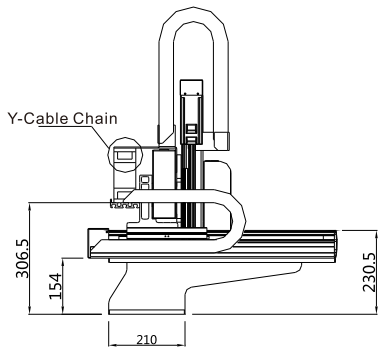

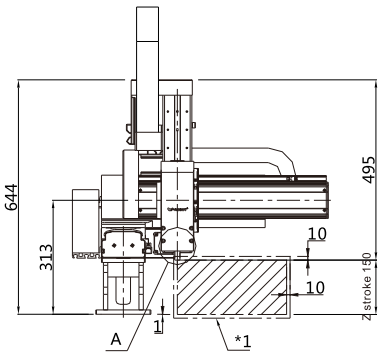

Detail View A

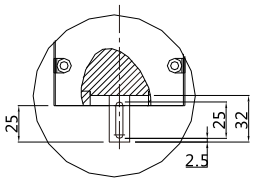

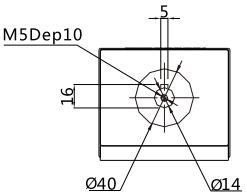

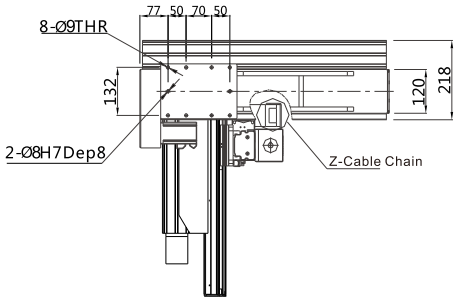

*1:When the moving range return to origin,the stop position of table`s movement range and mechanical limit.

VFA10 4 axes

W-ROBOT® Linear Drives

Technical parameters

Ltem	X axis	Y axis	Z axis	R axis
Axis Construction	VF14 (Longer sliding rack)	VF12	VF10	R10
Worksing Stroke(XYZ:mm)(R:°)	400	400	150	360
Repeatability(XYZ:mm)(R:°)	±0.01(C7)	±0.01(C7)	±0.01(C7)	±0.02
Drive Type	BallScrew(C7)	BallScrew(C7)	BallScrew(C7)	Planetary Gear
BallScrewLead(mm)	20	20	10	1/10
MaximumSpeed(mm/sec)(R:°/sec)	1000	1000	500	360
AC ServoMotorOutput(W)	400W	400W	200W+ (Brake)	400W
Payload(Kg)	10Kg			
Environment	0-40℃,85%RH Below			

VF10 4axes

Unit(mm)

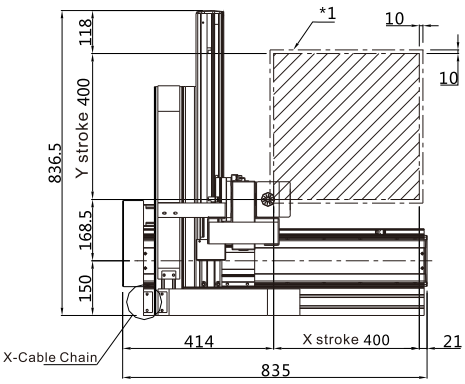

X-Cable Chain

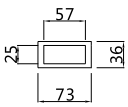

Y-Cable Chain

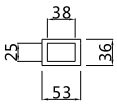

Z-Cable Chain

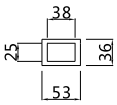

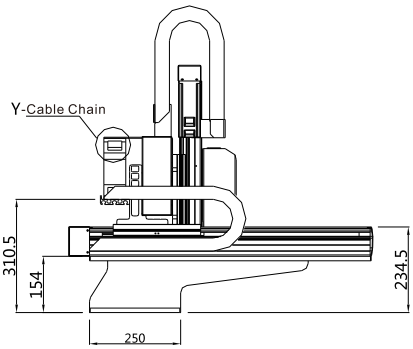

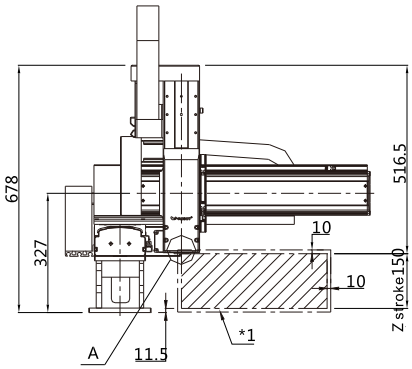

Detail View A

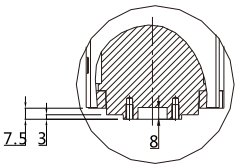

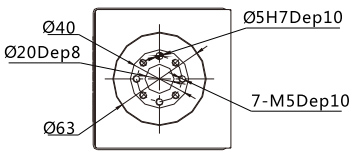

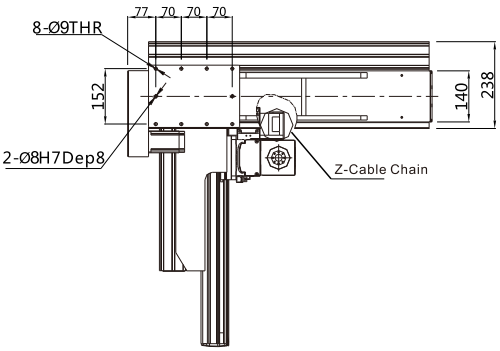

*1:When the moving range return to origin,the stop position of table`s movement range and mechanical limit.

V-ROBOT®
Linear Drives

VFA15 4 axes

Technical parameters

Ltem	X axis	Y axis	Z axis	R axis
Axis Construction	VF17 (Longer sliding rack)	VF14	VF12	R15
Worksing Stroke(XYZ:mm)(R:°)	500	500	250	360
Repeatability(XYZ:mm)(R:°)	±0.01(C7)	±0.01(C7)	±0.01(C7)	±0.02
Drive Type	BallScrew(C7)	BallScrew(C7)	BallScrew(C7)	Planetary Gear
BallScrewLead(mm)	20	20	10	1/20
MaximumSpeed(mm/sec)(R:°/sec)	1000	1000	500	360
ServoMotorOutput(W)	400W	400W	200W+ (Brake)	400W
Payload(Kg)	15Kg			
Environment	0-40℃,85%RH Below			

VF15 4axes

Unit(mm)

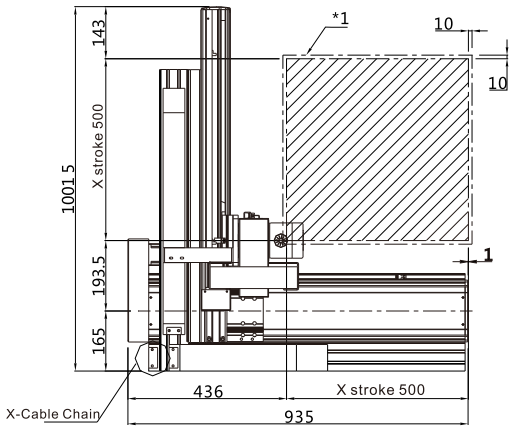

X-Cable Chain

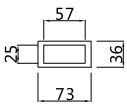

Y-Cable Chain

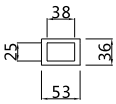

Z-Cable Chain

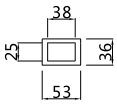

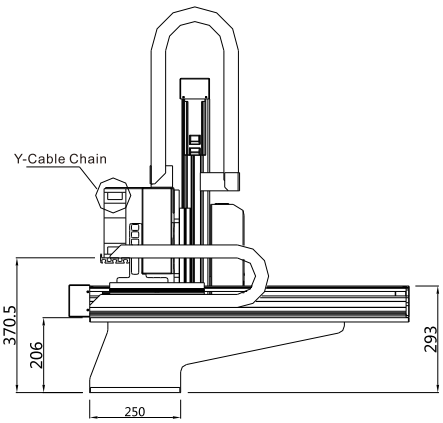

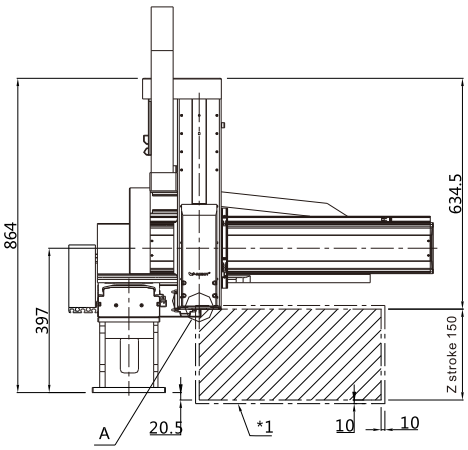

Detail View A

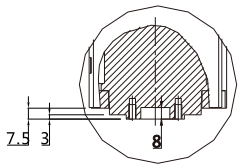

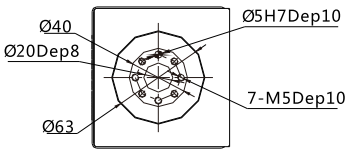

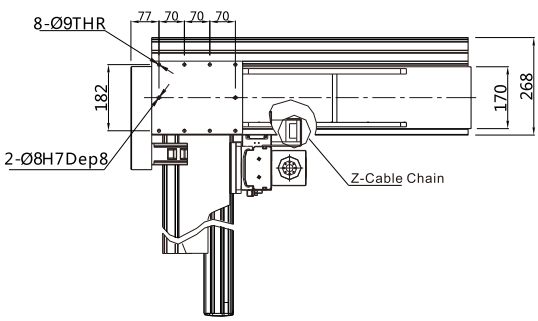

*1:When the moving range return to origin,the stop position of table`s movement range and mechanical limit.

V-ROBOT®

Linear Drives

Distributors for Australia & New Zealand

MOTION TECHNOLOGIES PTY LTD

24/22-30 Northumberland Road
Caringbah NSW 2229 Australia
Phone: (02) 9524 4782

sales@motiontech.com.au
www.motiontech.com.au

© 09/11/2020