Introduction of Pin Hong Technology

Pin Hong Technology is a professional manufacturer of planetary gear reducers. Since its establishment in 1982, the company has continued to provide high-quality products to the market and provide various solutions in the field of motion control applications. It is the primary goal of Pin Hong Technology to use the latest processing equipment and measurement instruments to build a state-of-the-art production plant, and provide high-quality, highly competitive products.

Today we have played an important role for the automation of various industries such as production lines, conveyor systems, solar energy industry, industrial printing presses and printed circuit boards. As a professional manufacturer, besides providing high-quality products, we have achieved outstanding results in industrial automation. When there is an automation-related need, Pin Hong team will provide you with the best services.

www.motiontech.com.au

Contents

1 Introduction of Pin Hong Technology
2 Contents Index
3 Processing and Testing Equipment
5 Quality Testing Equipment
9 Introduction of Planetary Gear Reducer
11 How to Make a Selection/Industrial Applications
12 Product Description Precision, Standard, General Purpose, Special Design
13 Table of Motor Wattage and Matching Reducer Frame Size
14 Technical Parameter Introduction/Model Description

Planetary Gear Reducer

15 Product Description
19 DG Series — Standard Type — Through-hole Output Cover — 5 - 7 arc min
21 DGT Series — Standard Type — Through-hole Output Cover — 5 - 7 arc min
23 DA Series — Standard Type — Through-hole Output Cover — 1 - 7 arc min
25 DM Series — Standard Type — Through-hole Output Cover — 5 - 8 arc min
27 DML Series — Standard Type — Perforated Output Cover — 5 - 8 arc min
29 DF Series — Standard Type — Flange Output Style — 5 - 8 arc min
31 DS Series — Standard Type — Low Temperature Rise Design — 5 - 8 arc min
33 DH Series — General Purpose Type — Through-hole Output Cover — 10 - 12 arc min
35 DL Series — General Purpose Type — Perforated Output Cover — 10 - 12 arc min
37 DN Series — General Purpose Type — High Load Design — 10 - 12 arc min

Spiral Bevel Gear Reducer

39 RA Series Product Features
40 RA Series Product Summary Table
43 RA Series Technical Information
45 RA-ST-S — Size — Double Solid Shaft Output — Solid Shaft Input — 3~11 arc min
46 RA-SL/SR-S — Size — Single Solid Shaft Output — Solid Shaft Input — 3~11 arc min
47 RA-HT-S — Size — Hollow Shaft Output with Key — Solid Shaft Input — 3~11 arc min
48 RA-CT-S — Size — Keyless Bushing Output — Solid Shaft Input — 3~11 arc min
49 RA-ST-S0S0 — Size — Double Solid Shaft Output — Double Solid Shaft Input — 3~11 arc min
50 RA-SL/SR-S0S0 — Size — Single Solid Shaft Output — Double Solid Shaft Input — 3~11 arc min
51 RA-ST-F — Size — Double Solid Shaft Output — Flange Input — 3~11 arc min
52 RA-SL/SR-F — Size — Single Solid Shaft Output — Flange Input — 3~11 arc min
53 RA-HT-F — Size — Hollow Shaft Output with Key — Flange Input — 3~11 arc min
54 RA-CT-F — Size — Keyless Bushing Output — Flange Input — 3~11 arc min
55 RA-ST-G — Size — Double Solid Shaft Output — Reducer Input — 3~11 arc min
56 RA-SL/SR-G — Size — Single Solid Shaft Output — Reducer Input — 3~11 arc min
57 RA-HT-G — Size — Hollow Shaft Output with Key — Reducer Input — 3~11 arc min
58 RA-CT-G — Size — Keyless Bushing Output — Reducer Input — 3~11 arc min
59 RAM/RAH Series Product Features
60 RAM Series Product Summary Table
61 RAH Series Product Summary Table
62 RAM Technical Information Standard Type — 8 - 10 arc min
64 RAM-H — Size — Hollow Shaft — 8 - 10 arc min
65 RAM-S — Size — Single solid shaft — 8 - 10 arc min
66 RAM-2S — Size — Double Solid Shaft — 8 - 10 arc min
67 RAM-D — Size — Clamp-on — 8 - 10 arc min
68 RAM-F — Size — Flange Output Shaft — 8 - 10 arc min
69 RAH Technical Information General Purpose Type — 13 - 15 arc min
71 RAH-H — Size — Hollow Shaft — 13 - 15 arc min
72 RAH-S — Size — Single Solid Shaft — 13 - 15 arc min
73 RAM-2S — Size — Double Solid Shaft — 13 - 15 arc min
74 RAH-D — Size — Clamp-on — 13 - 15 arc min
75 RAH-F — Size — Flange Output Shaft — 13 - 15 arc min

Hollow Rotating Platform

76 Product Description
77 Product Advantages
79 HRP Series Technical Information

Bevel Gear Screw Lifting System

84 Product Description
88 MEMO

Processing and Testing Equipment

▼ Grinding machine

▼ Gear cutting machine

▼ Illustrative picture of grinding

▶ Gear Measuring Machine

Quality Testing Equipment

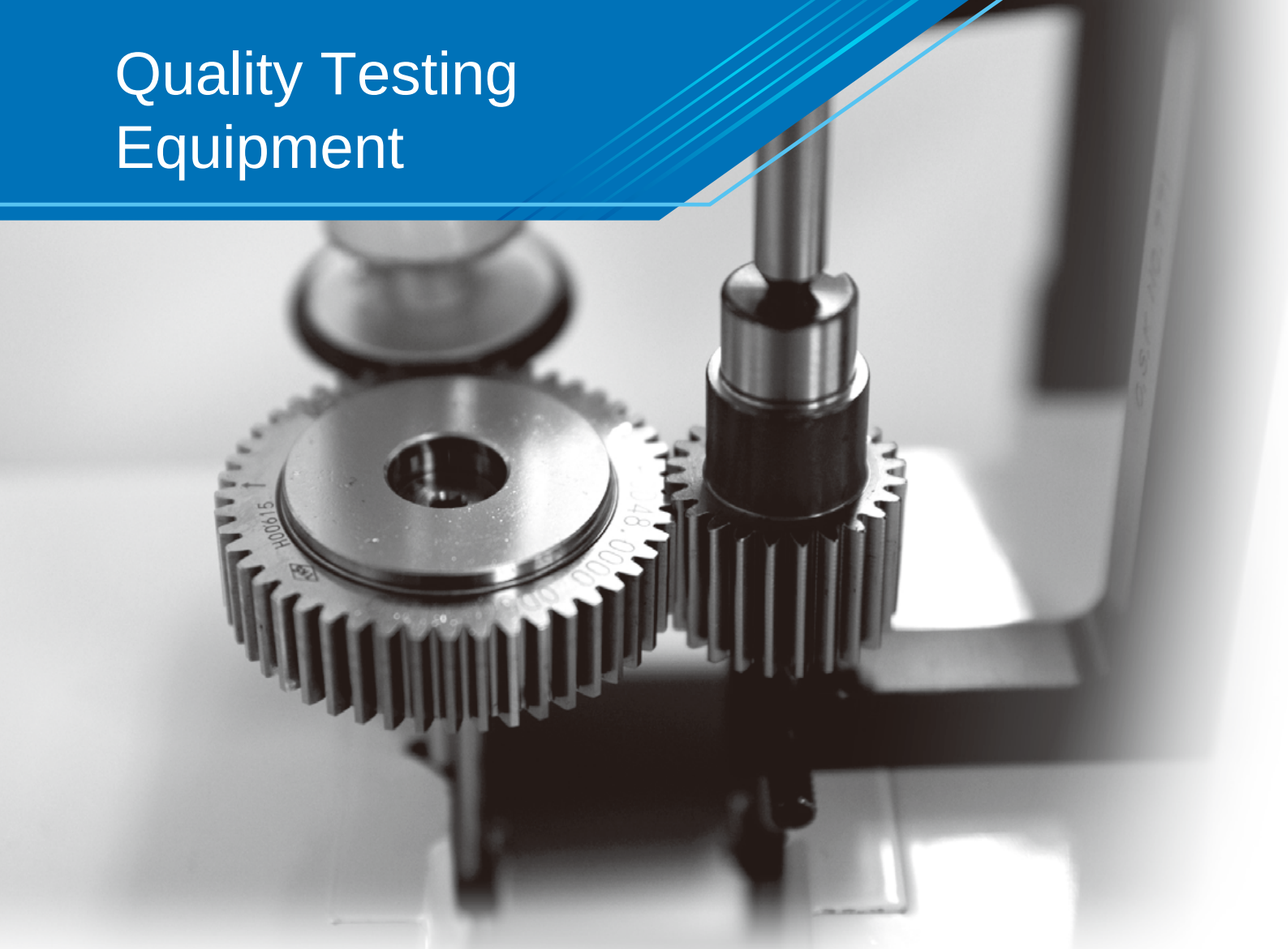

▶ Gear Mesh Testing Machine

Double flank test method

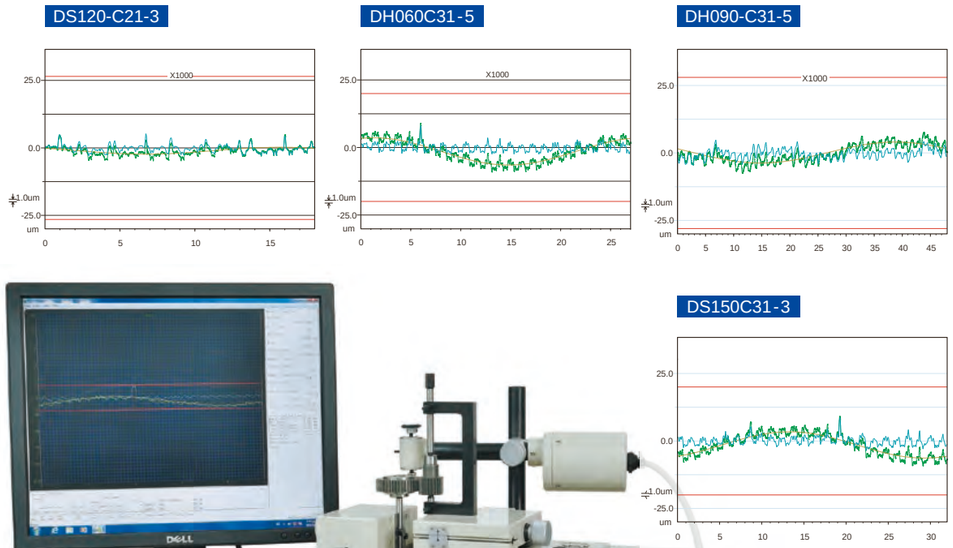

▼ Rockwell Hardness Testing Machine

▼ Noise Detection Equipment

▼ Concentricity Tester

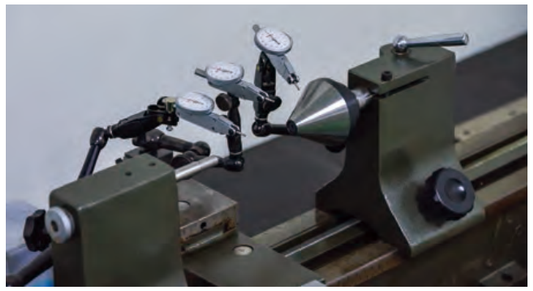

▼ Load Testing Machine

▼ Height gauge

Quality Testing Equipment

▶ Three-dimensional Measuring Instrument

▶ Backlash Measuring Instrument

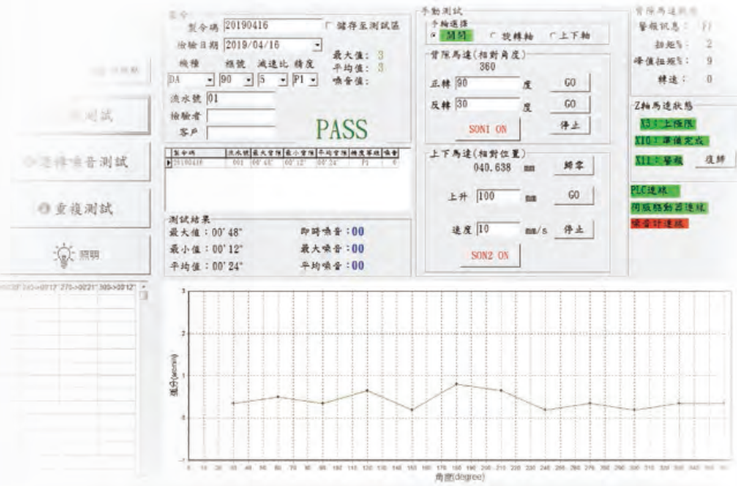

▼ Torque Testing Machine

▼ Torque Test Result

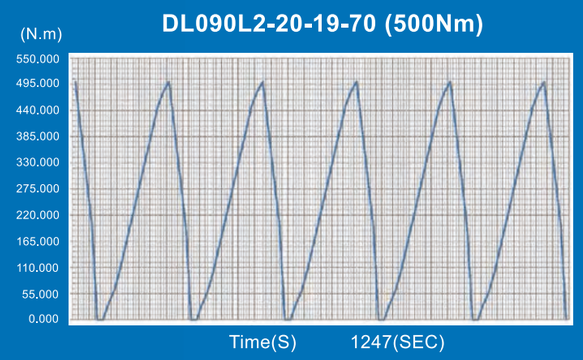

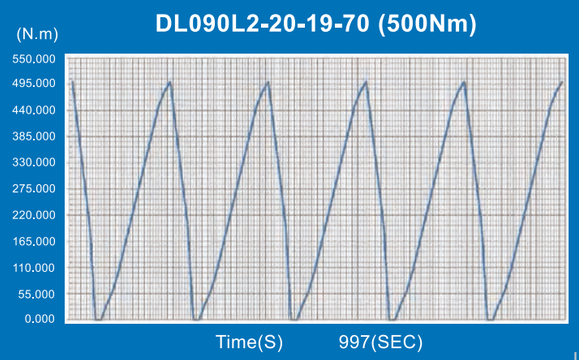

Introduction of Planetary Gear Reducer

Planetary gear reducer is often used in the field of precision motion control to meet the application requirements of high torque, high torsional rigidity, and low backlash.

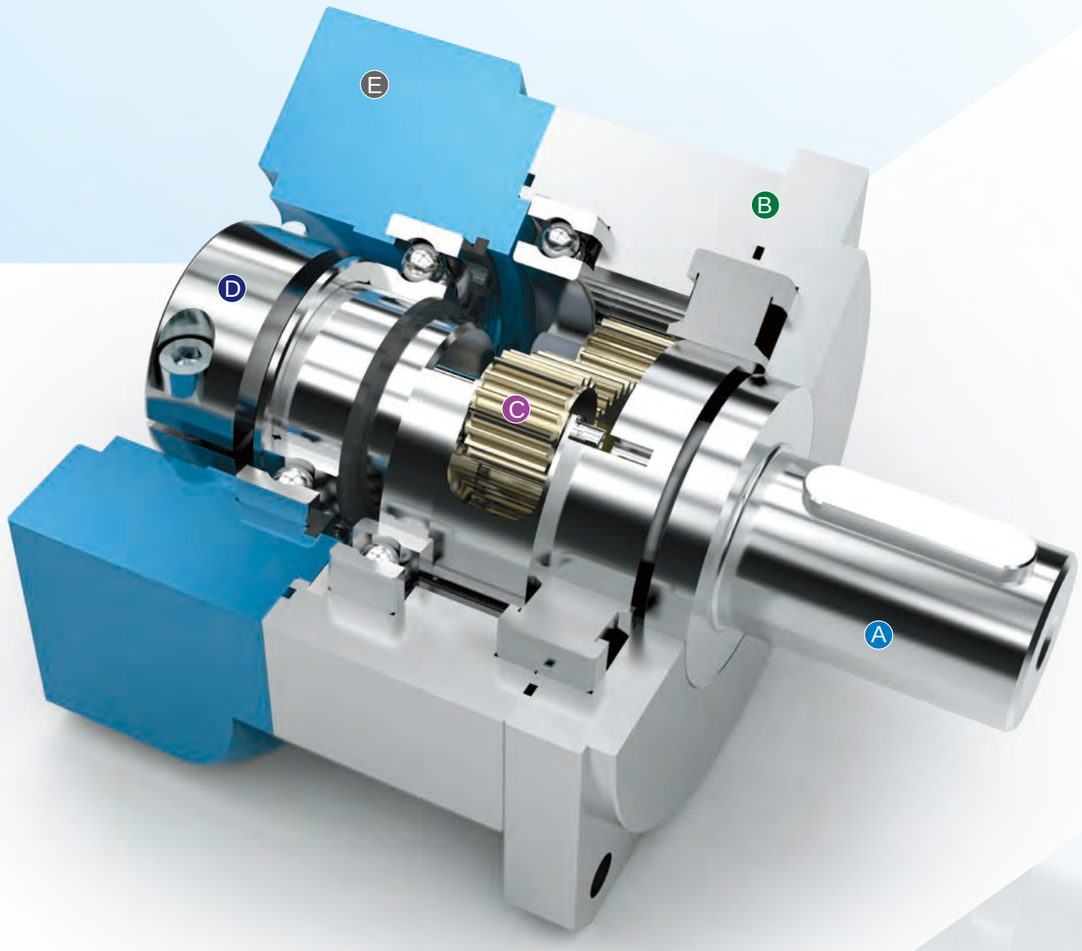

A Output Shaft / Planet Carrier

The integrated planetary carrier and output shaft can provide excellent torsional rigidity. After precision machining, the gear set is not prone to eccentricity and able to reduce interference and reduce wear and noise. Besides, a larger span is used to configure the bearing to disperse the load of the bearing, which furthermore strengthens the torsional rigidity and radial load capacity of the reducer.

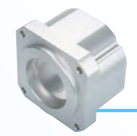

B Output Cover

The output cover is made of aluminum alloy, which provides the product with excellent heat dissipation capacity, so that the reducer can deliver excellent performance in the field of machine tools.

C Planetary Gear Set

The gear is specially made of alloy steel, which is first tempered and heat treated for the material hardness to reach HRC 30 degrees, and then subject to nitrided surface treatment to obtain HV860, so that the product has high surface hardness and high core toughness, and optimized product strength and life.

D Input Shaft

The input shaft and the output shaft of the motor are connected by a bolted structure, with a round shaft symmetrical design. Through dynamic balance analysis, it is ensured that there is no eccentric load at high speeds. After reducing the unnecessary radial force, the load at the motor end can be effectively reduced.

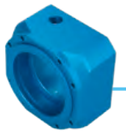

E Input Cover / Motor Flange

The material of the input cover is aluminum alloy to provide better heat dissipation effect, and then through professional lathe processing it can provide good concentricity and verticality, so that the product can be steadily combined with various motors, and reduce unnecessary shaft axial radial force due to insufficient precision and extend the product life cycle.

- ## Compact Structure

  Planetary Gear Reducer is characterized by full utilization of space, designing bearings and gear ratio in a limited space, so that the product is smaller and more space-saving than traditional reducers.

- ## High Efficiency

  When the planetary gear set is running, it will be in a completely tight meshing state, which reduces the situation of gear collision or gear damage caused by partial meshing. The characteristic of complete tight meshing allows the efficiency loss of each gear transmission only 3%. This type of transmission mode can ensure that the kinetic energy is input to the reducer and then to the mechanism end, while maintaining high transmission efficiency and preventing mechanical loss caused by friction and slippage of internal gears.

- ## High Axial Radial Load Capacity

  The reducer output shaft from Pin Hong Technology adopts a style of large span, so that the bearing is arranged at both ends of the output shaft. This design can effectively disperse the force acting on the output shaft and reduce the load of the bearing. In other words, the product of the same size has increased load capacity in axial radial direction.

- ## High Strength

  The gear set of the reducer is very strong and stable, and the thickness of the gear disperses the load acting on the gear. The large-span bearing set provides a stable structure; the precision gear set distributes the load to each planetary gear under tight meshing to withstand the torque load. With this design, Pin Hong can provide better products to the market.

- ## High Stability

  The precision machining of Pin Hong Technology ensures that the products are coaxial and concentric, and the bearing designed with a large span provides the product with excellent stability.

How to Make a Selection and Industrial Applications

How to select a suitable planetary gear reducer?

Planetary gear reducer is a product that amplifies torque and reduces speed. When used with a motor, it can provide a high-precision and powerful control module. Therefore, suitable products must be selected based on torque and accuracy levels.

Frame Size Determined Based on Torque

The power source will have the effect of torque amplification after the reduction ratio. The output torque of the reducer is proportional to the reduction ratio. The larger the ratio, the higher the torque; but the reducer gear set has its limits, so the "rated output torque" shown in the product technical data means that the product can operate stably under the condition, so the Frame Size must be selected based on the required torque.

Model Determined Based on According to the Accuracy

Positioning is required in the automation process. When the positioning accuracy requirement is higher, the selection should be made on higher-end products, and vice versa. The accuracy of the planetary gear reducer is called "backlash", which refers to the backlash of the gear set. It is defined as the angle at which the output shaft of the reducer can rotate when the input end is fixed.

Choose According to Appearance

According to customer needs, there are standard series of output shaft and connecting surface for customers to select, and they can also be developed according to customer's special needs.

Selection Based on Axial Radial force

The life of the reducer is affected by the internal bearing. The life of the bearing can be calculated from the load and speed. When the axial radial load of the reducer is high, the bearing life will be shortened. At this time, it is recommended to select the product of higher grade.

Applications of Planetary Gear Reducer

Planetary gear reducer is often used in the field of precision motion control to meet the application requirements of high torque, high torsional rigidity, and low backlash. Selecting an appropriate reduction ratio can provide greater torque, so as to operate at the optimal speed to achieve the optimal result, and reduce the moment of inertia of the load to increase the equipment stability. Planetary gear reducer allows the machinery manufacturers to choose smaller and more economical motion control modules, so that the application range of Planetary gear reducer covers the entire automation field. Products can be seen in the following industries:

- Pick and Place System
- Rotary Drive
- Plasma Cutting Machine
- Positioning Platform
- CNC Engraving Machine
- Material Handling System
- Industrial Conveyor System
- Industrial Printing Machine
- Optical Inspection Equipment
- Gantry Type Loading and Unloading Robotic Arm
- Machine Tool (Automation Peripheral)
- Automatic Testing Machine
- Feeder
- Packing Machine

Product Description

Precision | Standard | General Purpose | Special Design

Precision Type

Precision

High-precision products can improve the robot transfer accuracy and can also be used in wafer conveying and glass lens conveying.

Standard Type

Standard

Achieving balanced accuracy and price can effectively improve the accuracy of automated production lines and control manufacturing cost.

General Purpose Type

All Purpose

It can be widely used in basic transfer, torque increase and speed reduction, as the cornerstone of factory automation.

Special Design

Customized

We have a good processing and design team, who can provide a full range of services for various development projects.

Table of Motor Wattage and Matching Reducer Frame Size

L1	DG	DGT	DA	DM(L)	DH(L)	DF	DS	DN	RAM	RAH	R-□-S	R-□-F	R-□-G
100W	060	060	060	042	042	–	–	060	060	060	065	065	–
200W	060	060	060	060	060	060	–	060	060	060	065	065	–
400W	060	060	060	060	060	060	060	060	060	060	090	065	–
500W	060	060	060	060	060	060	060	060	060	060	090	065	–
750W	090	075	090	070	080	090	070	080	090	090	090	090	–
1.0kW	090	075	090	090	080	090	090	080	090	090	110	110	–
1.5kW	115	100	120	090	090	090	090	100	090	120	110	110	–
2.0kW	115	100	120	120	120	120	120	–	120	120	140	110	–
3.5kW	142	140	150	150	150	150	150	–	150	150	140	170	–
5.0kW	180	180	–	150	150	150	150	–	150	150	170	170	–
7.0kW	180	180	–	180	–	180	180	–	180	–	210	210	–
11.0kW	220	220	–	220	–	220	220	–	220	–	210	–	–

L2	DG	DGT	DA	DM(L)	DH(L)	DF	DS	DN	RAM	RAH	R-□-S	R-□-F	R-□-G
100W	090	090	090	070	080	–	070	080	090	090	–	–	090
200W	090	090	090	090	090	090	090	100	090	090	–	–	110
400W	115	115	120	120	120	120	120	–	120	120	–	–	140
500W	142	142	150	120	120	120	120	–	120	120	–	–	140
750W	142	142	150	150	150	150	150	–	150	150	–	–	170
1.0kW	180	180	–	180	–	180	180	–	180	–	–	–	210
1.5kW	220	220	–	220	–	220	220	–	220	–	–	–	210
2.0kW	220	220	–	220	–	220	220	–	–	–	–	–	–
3.5kW	–	–	–	–	–	–	–	–	–	–	–	–	–
5.0kW	–	–	–	–	–	–	–	–	–	–	–	–	–

Technical Parameter Introduction

Reduction Ratio	The reduction ratio is the ratio of the torque to the speed between the input and output of the reducer, proportional to torque and inversely proportional to speed. In addition to this function, the reduction ratio is responsible for reducing the moment of inertia of the mechanism, so that the same motor can drive a mechanism of a larger moment of inertia.
Rated Output Torque	The output torque is an important parameter in the selection of a planetary gear reducer. The motor can provide a larger output torque after the reduction ratio, but the gear set still has a limit of strength, so when the ratio is too large, there will be a concern about overload on reducer gears. For this reason, a product of a higher grade must be considered based on the rated output torque.
Speed	The output speed of the product is inversely proportional to the gear ratio. Through the reduction gear set, the high motor speed is converted to a lower speed, and then output by the output end of the reducer. This is the basic function of a reducer.
Backlash	The backlash of a reducer is product accuracy, which refers to the angle at which the reducer can rotate when the gearbox is fixed at the input end. This is the gap between the gear sets. If the mechanism itself is lightly loaded and has no need for reversal, backlash is not as important; in precision applications that require forward and reverse rotation, such as robots, automation, or CNC, backlash is very important for accuracy and positioning.
Axial Radial Force	Planetary Gear Reducer life is mostly designed for 20,000 hours, and the product life is determined by the bearing used. When the bearing speed is high and the force is large, the product life will be reduced, so at the output speed 100 RPM as the basis the bearing of 20,000 hours life has the maximum bearing capacity to be calculated as the allowable axial radial force shown in the catalog.
Torsional Rigidity	Although the Planetary Gear Reducer is a rigid body, it will still cause deformation when subject to force. Therefore, the torque value required for each deformation of 1 arc minute (1/60 degree) is provided for the user reference.
Moment of Inertia	Although the planetary gear reducer can reduce the moment of inertia of the mechanism and reduce the load of the motor, it still has the moment of inertia. In addition, when the product has poor concentricity and gear set interference, it will produce excessive moment of inertia, so the maximum moment of inertia of the product is provided for the user reference.

▶ Model Description

DG	090	Li	10	D1-D2-D3-D4 (L1/L2)
Model	**Frame Size**	**Stage**	**Ratio**	**Motor Dimensions**
DG / DM DGT / DML DH / DS DL / DA DN / DF	42 / 100 60 / 120 70 / 150 80 / 180 90 / 220	L1: One-stage L2: Two-stage L3: Three-stage		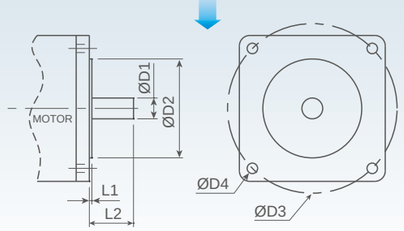

Planetary Gear Reducer

DG series

For product specifications, see p19-20.

It is suitable for the needs of precision positioning. The gear is made of alloy steel with a through-hole output cover outside.

- Grade: Standard type
- Features: Through-hole output cover
- Backlash: 5 ~ 7 arc min
- Size: 060, 090, 115, 142, 180, 220
- Noise: 58 ~ 70 dB
- Life: 20,000 hrs.

DGT series

For product specifications, see p21-22.

Suitable for precision positioning need, the gear is made of alloy steel, with tapered roller bearings inside for stronger load bearing, and the mounting holes are through-holes.

- Grade: Standard type
- Features: Through-hole output cover
- Backlash: 5 ~ 7 arc min
- Size: 060, 075, 100, 140, 180, 220
- Noise: 58 ~ 70 dB
- Life: 30,000 hrs.

DA series

For product specifications, see p23-24.

Designed specifically for high-precision needs, the backlash can be as low as ≤ 1 arc minute. The product is integrated with the characteristics of low backlash, low noise, and high torque, which can provide the equipment with excellent control accuracy.

- Grade: Precision type
- Features: Through-hole output cover
- Backlash: 1 ~ 7 arc min
- Size: 060, 090, 120, 150
- Noise: 58 ~ 65 dB
- Life: 20,000 hrs.

DM series

For product specifications, see p25-26.

Suitable for precision positioning, the gear is made of alloy steel, which has better torsional rigidity, and the exterior is equipped with a through-hole output cover.

- Grade: Standard type
- Features: Through-hole output cover
- Backlash: 5 ~ 8 arc min
- Size: 042, 060, 070, 090, 120, 150, 180, 220
- Noise: 56 ~ 70 dB
- Life: 20,000 hrs.

DML series

For product specifications, see p27-28.

The gear box and the inner gear ring adopt an integrated structure, which has better torsional rigidity, and the installation hole at the output end is perforated type.

- Grade: Standard type
- Features: Perforated output cover
- Backlash: 5 ~ 8 arc min
- Size: 042, 060, 090, 120, 150, 180, 220
- Noise: 56 ~ 70 dB
- Life: 20,000 hrs.

DF series

For product specifications, see p29-30.

With flange surface output, replacing the traditional output shaft with a rotating output flange, it has a wide application in rotating mechanism.

- Grade: Standard type
- Features: Flange output style
- Backlash: 5 ~ 8 arc min
- Size: 060, 090, 120, 150, 180, 220
- Noise: 58 ~ 70 dB
- Life: 20,000 hrs.

DS series

For product specifications, see p31-32.

It is suitable for reciprocating positioning applications. The gearbox adopts aluminum alloy frame, with good heat dissipation.

- Grade: Standard type
- Features: Low temperature rise design
- Backlash: 5 ~ 8 arc min
- Size: 060, 070, 090, 120, 150, 180, 220
- Noise: 58 ~ 70 dB
- Life: 20,000 hrs.

DH series

For product specifications, see p33-34.

It is widely used various kinds of automation equipment, and the mounting holes are through-holes.

- Grade: General purpose type
- Features: Through-hole output cover
- Backlash: 10 ~ 12 arc min
- Size: 042, 060, 080, 090, 120, 150
- Noise: 56 ~ 65 dB
- Life: 20,000 hrs.

DL series

For product specifications, see p35-36.

Fit various application needs, the output cover is a perforated design.

- Grade: General purpose type
- Features: Perforated output cover
- Backlash: 10 ~ 12 arc min
- Size: 042, 060, 080, 090, 120, 150
- Noise: 56 ~ 65 dB
- Life: 20,000 hrs.

DN series

For product specifications, see p37-38.

With the characteristics of high tolerance shaft and radial load, it can provide excellent operating performance under high loads.

- Grade: General purpose type
- Features: High load design
- Backlash: 10 ~ 12 arc min
- Size: 060, 080, 100
- Noise: 58 ~ 60 dB
- Life: 20,000 hrs.

Introduction of DG and DGT Series Reducer Features

Planetary Gear Reducer is often used in the field of precision motion control to satisfy the application needs in high torque, high torsional rigidity, and low backlash.

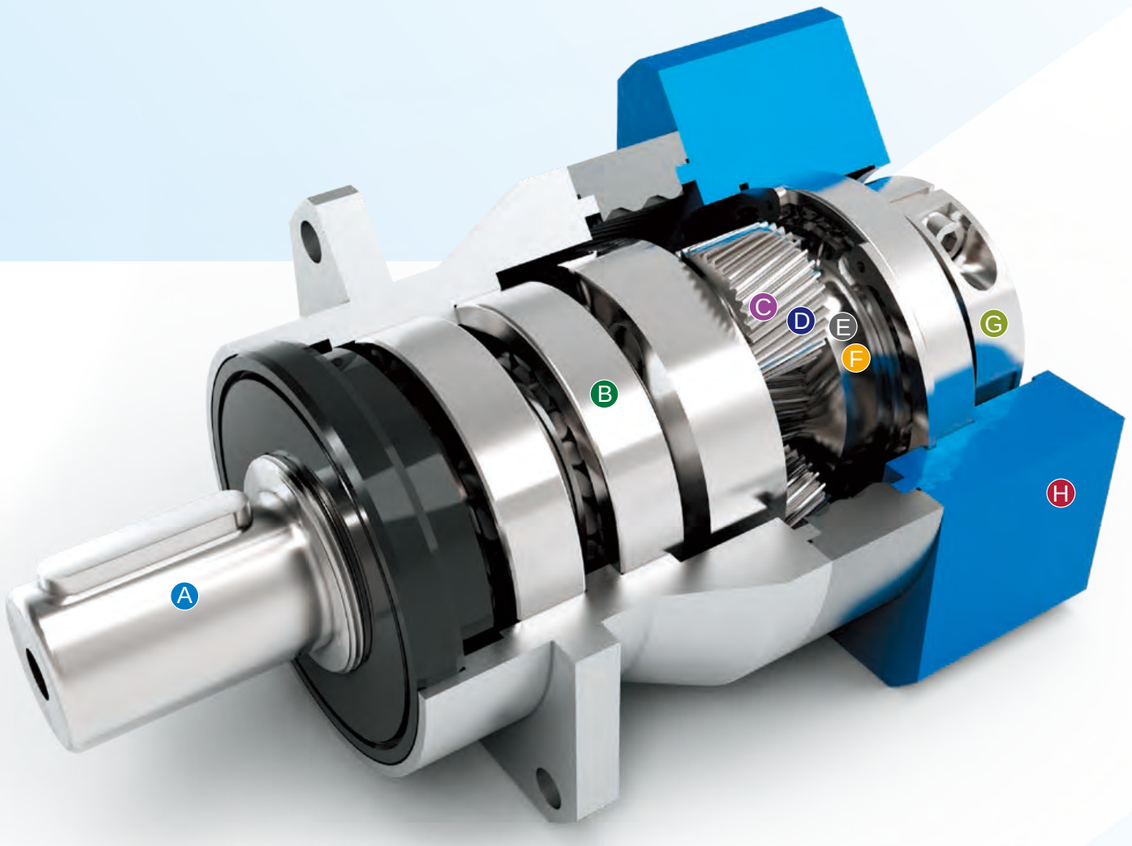

C Planetary gear set

One-stage: 3/4/5/6/7/8/10
Two-stage: 9/12/15/16/20/25/30/50/60/80/100
JIS2 grade

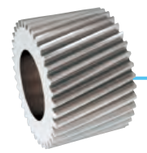

D Planetary gear

Medium carbon chromium molybdenum alloy steel Hardness 860HV

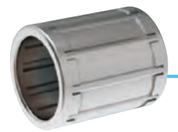

E Full needle roller bearings

Increase wear resistance and strength, thereby prolong service life

F Sun gear

Hardness 860~900HV
60/75/90 Medium carbon chromium
100/120/140/180/220 Chromium molybdenum vanadium alloy tool steel

G Input shaft

Increase wear resistance and strength, thereby prolong service life

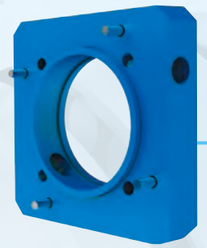

H Motor connection board

6061-T6
Fast replacement and high performance to cost ratio

A Output shaft

Carbon steel
Quenching and tempering heat treatment
Concentricity 8μm

B Bearing

DG uses deep groove ball bearings

DGT uses tapered roller bearings

Table of DG, DGT and Other Models

Product model	DG	DGT	DM	DH	DA
Accuracy range (arc min)	≤5~ ≤7	≤5~ ≤7	≤ 5~ ≤8	≤10~ ≤12	≤1~ ≤5
Bearing type	Ball	Roller	Ball	Ball	Ball
Internal gear type	Helical gear	Helical gear	Straight gear	Straight gear	Helical gear
Changeability of connecting plate	Yes	Yes	No	No	No
Input shaft style	Shaft sleeve/ Integrated body	Shaft sleeve/ Integrated body	Integrated body	Integrated body	Integrated body

DG series

Standard Type / Through-hole Output Cover

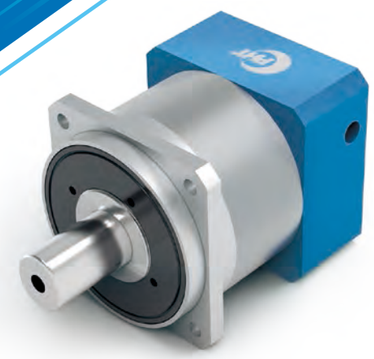

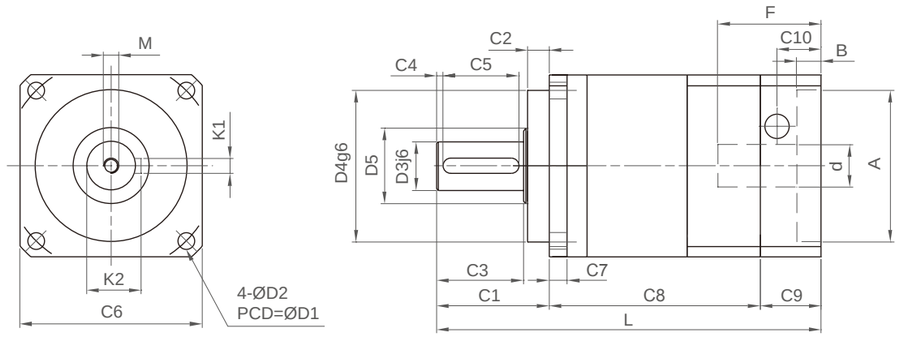

Unit: mm

Size		DG060	DG090	DG115	DG142	DG180	DG220
D1		70	100	130	165	215	250
D2		5.2	6.8	8.6	10.5	13	17
※ D3		16	22	32	40	55	75
D4		50	80	110	130	160	180
D5		25	35	65	65	100	80
C1		37	48	65	97	105	138
C2		7	10	12	15	20	30
C3		28.5	36.5	51	79	82	105
C4		2	3	5	5	6	7
C5		25	32	40	65	70	90
C6		60	90	115	142	180	220
C7		16	18	20	17	20	30
C8	L1	78	103.5	125.5	154.5	188	219.5
	L2	100	129.5	155.5	192.5	233	269.5
C9		20	25.5	25.5	34.5	35	44.5
C10		13	18	18	22.5	23	28.5
L	L1	135	177	216	286	328	402
	L2	157	203	246	324	373	452
M		M5xP0.8x12.5	M8xP1.25x20	M12xP1.75x30	M16xP2.0x40	M20xP2.5x50	M20xP2.5x50
K1		5	6	10	12	16	20
K2		18	24.5	35	43	59	79.5
d		≤19	≤24	≤32	≤38	≤55	≤55
△ A		50	80	110	130	160	200
B		6	10	10	10	11	12
△ F		≤33.5	≤46	≤53	≤66	≤82.5	≤88.5

※：The reducer output shaft can be customized in size and length for customers.
△：The special size indicated by this symbol varies according to customer needs and servo motors.
Note: Three-stage is not in this table, please contact our sales if it is needed.

Technical Information

Specification	Stage	Ratio	DG060	DG090	DG115	DG142	DG180	DG220
Rated output torque (Nm)	1	3	55	130	208	342	588	1140
		4	50	140	290	542	1050	1700
		5	60	160	330	650	1200	2000
		6	55	150	310	600	1100	1900
		7	50	140	300	550	1100	1800
		8	43	114	247	475	950	1520
		10	40	100	230	450	900	1500
	2	9	55	130	208	342	588	1140
		12	50	140	290	542	1050	1700
		15	55	130	208	342	588	1140
		16	50	140	290	542	1050	1700
		20	50	140	290	542	1050	1700
		25	60	160	330	650	1200	2000
		28	50	140	300	550	1100	1800
		30	55	150	310	600	1100	1900
		32	43	114	247	475	950	1520
		35	50	140	300	550	1100	1800
		40	43	114	247	475	950	1520
		50	60	160	330	650	1200	2000
		60	55	150	310	600	1100	1900
		70	50	140	300	550	1100	1800
		80	43	114	247	475	950	1520
		100	40	100	230	450	900	1500
Instant maximum output torque (Nm)	1, 2	3~100	3 times rated output torque					
Backlash (arc min)	1	3~10	≤5	≤5	≤5	≤5	≤5	≤5
	2	9~100	≤7	≤7	≤7	≤7	≤7	≤7
Rated input speed (RPM)	1, 2	3~100	5000	4000	4000	3000	3000	2000
Maximum input speed (RPM)			10000	8000	8000	6000	6000	4000
Weight (kg)	1	3~10	1.5	4.5	9	17	34	53
	2	9~100	2.2	6	11	21	40	74
Torsional rigidity (Nm/arc min)	1, 2	3~100	2.5	5	10	25	70	115
Allowable radial force (N) A			920	1800	3350	4200	5800	17500
Allowable axial force (N) A			460	890	1700	2100	2900	8750
Noise value (dB) B			≤58	≤60	≤63	≤65	≤67	≤70
Service life (hrs) C			20000					
Use efficiency at full load (%)	1	3~10	≥97					
	2	9~100	≥94					
Operating temperature range (℃)	1, 2	3~100	-10°C~+90°C					
Protection level			IP64					
Lubricating oil			Synthetic lubricating oil					
Moment of inertia (kg X cm²)	1	3	0.16	0.61	3.25	9.21	28.98	69.61
		4	0.14	0.48	2.74	7.54	23.67	54.37
		5	0.13	0.47	2.71	7.42	23.29	53.27
		6	0.13	0.45	2.65	7.25	22.75	51.72
		7	0.13	0.45	2.62	7.14	22.48	50.97
		8	0.13	0.44	2.58	7.07	22.59	50.84
		10	0.13	0.44	2.57	7.03	22.14	50.56
	2	9	0.16	0.61	3.25	9.21	28.98	69.61
		12	0.16	0.61	3.25	9.21	28.98	69.61
		15	0.16	0.61	3.25	9.21	28.98	69.61
		16	0.14	0.48	2.74	7.54	23.67	54.37
		20	0.14	0.48	2.74	7.54	23.67	54.37
		25	0.13	0.47	2.71	7.42	23.29	53.27
		28	0.14	0.48	2.74	7.54	23.67	54.37
		30	0.16	0.61	3.25	9.21	28.98	69.61
		32	0.14	0.48	2.74	7.54	23.67	54.37
		35	0.13	0.47	2.71	7.42	23.29	53.27
		40	0.14	0.48	2.74	7.54	23.67	54.37
		50	0.13	0.47	2.71	7.42	23.29	53.27
		60	0.13	0.45	2.65	7.25	22.75	51.72
		70	0.13	0.45	2.62	7.14	22.48	50.97
		80	0.13	0.44	2.58	7.07	22.59	50.84
		100	0.13	0.44	2.57	7.03	22.14	50.56

A. When the output speed is 100RPM, the load acts on the center position of the output shaft.
B. The smaller the reduction ratio or the higher the speed, the greater the noise value. (3000RPM, no load, reduction ratio=10)
C. The service life of continuous operation is 10,000 hours.
Note: Ratio100 uses three-stage (L3) style, and the strength is stronger than that at two-stage (L2).

Planetary Gear Reducer

DGT series

Standard Type / Through-hole Output Cover

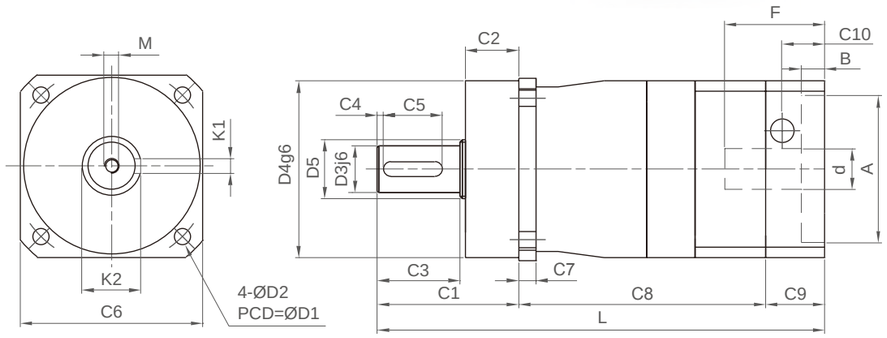

Unit: mm

Size		DGT060	DGT075	DGT100	DGT140	DGT180	DGT220
D1		68	85	120	165	215	250
D2		5.2	6.8	8.6	10.5	13	17
※ D3		16	22	32	40	55	75
D4		60	70	90	130	160	180
D5		20	35	45	55	70	80
C1		48.5	56	88	112	112	138
C2		18.5	18	28	27	27	30
C3		28.5	36	58	82	82	105
C4		2	3	5	5	6	7
C5		25	32	40	65	70	90
C6		62	76	105	142	180	220
C7		6	7	10	12	15	20
C8	L1	80.5	103	125	146.5	183	197
	L2	102.5	129	155	184.5	228	247
C9		20	25.5	25.5	34.5	35	44.5
C10		13	18	18	22.5	23	28.5
L	L1	149	184.5	238.5	293	330	379.5
	L2	171	210.5	268.5	331	375	429.5
M		M5xP0.8x12.5	M8xP1.25x20	M12xP1.75x30	M16xP2.0x40	M20xP2.5x50	M20xP2.5x50
K1		5	6	10	12	16	20
K2		18	24.5	35	43	59	79.5
d		≤19	≤24	≤32	≤38	≤55	≤55
△ A		50	80	110	130	160	200
B		6	10	10	10	11	12
△ F		≤33.5	≤46	≤53	≤66	≤82.5	≤88.5

※：The reducer output shaft can be customized in size and length for customers.
△：The special size indicated by this symbol varies according to customer needs and servo motors.
Note: Three-stage is not in this table, please contact our sales if it is needed.

Technical Information

Specification	Stage	Ratio	DGT060	DGT075	DGT100	DGT140	DGT180	DGT220
Rated output torque (Nm)	1	3	55	130	208	342	588	1140
		4	50	140	290	542	1050	1700
		5	60	160	330	650	1200	2000
		6	55	150	310	600	1100	1900
		7	50	140	300	550	1100	1800
		8	43	114	247	475	950	1520
		10	40	100	230	450	900	1500
	2	9	55	130	208	342	588	1140
		12	50	140	290	542	1050	1700
		15	55	130	208	342	588	1140
		16	50	140	290	542	1050	1700
		20	50	140	290	542	1050	1700
		25	60	160	330	650	1200	2000
		28	50	140	300	550	1100	1800
		30	55	150	310	600	1100	1900
		32	43	114	247	475	950	1520
		35	50	140	300	550	1100	1800
		40	43	114	247	475	950	1520
		50	60	160	330	650	1200	2000
		60	55	150	310	600	1100	1900
		70	50	140	300	550	1100	1800
		80	43	114	247	475	950	1520
		100	40	100	230	450	900	1500
Instant maximum output torque (Nm)	1, 2	3~100	3 times rated output torque					
Backlash (arc min)	1	3~10	≤5	≤5	≤5	≤5	≤5	≤5
	2	9~100	≤7	≤7	≤7	≤7	≤7	≤7
Rated input speed (RPM)	1, 2	3~100	5000	4000	4000	3000	3000	2000
Maximum input speed (RPM)			10000	8000	8000	6000	6000	4000
Weight (kg)	1	3~10	1.6	4.2	8.3	17	33	51
	2	9~100	2.4	6	10	21	40	71
Torsional rigidity (Nm/arc min)	1, 2	3~100	5	10	20	50	140	230
Allowable radial force (N) A			3000	5000	6000	13000	20000	36000
Allowable axial force (N) A			4000	6000	8000	15000	21000	38000
Noise value (dB) B			≤58	≤60	≤63	≤65	≤67	≤70
Service life (hrs) C			30000					
Use efficiency at full load (%)	1	3~10	≥97					
	2	9~100	≥94					
Operating temperature range (°C)	1, 2	3~100	-10°C~+90°C					
Protection level			IP64					
Lubricating oil			Synthetic lubricating oil					
Moment of inertia (kg X cm²)	1	3	0.16	0.61	3.25	9.21	28.98	69.61
		4	0.14	0.48	2.74	7.54	23.67	54.37
		5	0.13	0.47	2.71	7.42	23.29	53.27
		6	0.13	0.45	2.65	7.25	22.75	51.72
		7	0.13	0.45	2.62	7.14	22.48	50.97
		8	0.13	0.44	2.58	7.07	22.59	50.84
		10	0.13	0.44	2.57	7.03	22.14	50.56
	2	9	0.16	0.61	3.25	9.21	28.98	69.61
		12	0.16	0.61	3.25	9.21	28.98	69.61
		15	0.16	0.61	3.25	9.21	28.98	69.61
		16	0.14	0.48	2.74	7.54	23.67	54.37
		20	0.14	0.48	2.74	7.54	23.67	54.37
		25	0.13	0.47	2.71	7.42	23.29	53.27
		28	0.14	0.48	2.74	7.54	23.67	54.37
		30	0.16	0.61	3.25	9.21	28.98	69.61
		32	0.14	0.48	2.74	7.54	23.67	54.37
		35	0.13	0.47	2.71	7.42	23.29	53.27
		40	0.14	0.48	2.74	7.54	23.67	54.37
		50	0.13	0.47	2.71	7.42	23.29	53.27
		60	0.13	0.45	2.65	7.25	22.75	51.72
		70	0.13	0.45	2.62	7.14	22.48	50.97
		80	0.13	0.44	2.58	7.07	22.59	50.84
		100	0.13	0.44	2.57	7.03	22.14	50.56

A. When the output speed is 100RPM, the load acts on the center position of the output shaft.
B. The smaller the reduction ratio or the higher the speed, the greater the noise value. (3000RPM, no load, reduction ratio=10)
C. The service life of continuous operation is 15,000 hours.
Note: Ratio100 uses three-stage (L3) style, and the strength is stronger than that at two-stage (L2).

Planetary Gear Reducer

DA series

Precision Type / Through-hole Output Cover

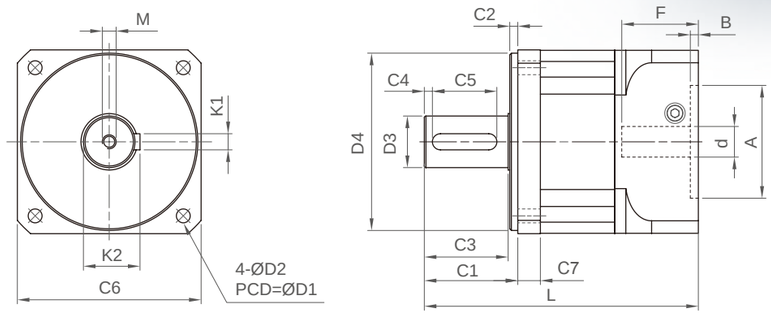

Unit: mm

Size		DA060	DA090	DA120	DA150
D1		70	105	130	165
D2		5.2	6.8	8.6	10.5
※ D3		16 (12~16)	20 (18~22)	32 (24~35)	42 (38~45)
D4		50	80	110	130
C1		35	56	58	74
C2		7	6	5	4
C3		27	49	52	67
C4		3	5	5	5
C5		20	25	40	45
C6		60	94	114	142
C7		15	17	18.7	18
L	L1	127	167	170.5	262
	L2	149	195.5	198.5	314
M		M4xP0.7x10	M6xP1.0x15	M8xP1.25x20	M12xP1.75x30
K1		5	6	10	12
K2		18	22.5	35	45
d		≤14	≤24	≤28	≤42
△ A		30~50	50~80	50~110	95~130
B		6	6	5	10
△ F		≤35	≤47.5	≤47.5	≤66.5

※：The reducer output shaft can be customized in size and length for customers.
△：The special size indicated by this symbol varies according to customer needs and servo motors.
Note: Three-stage is not in this table, please contact our sales if it is needed.

Technical Information

Specification	Stage	Ratio	DA060	DA090	DA120	DA150
Rated output torque (Nm)	1	3	40	120	230	450
		4	60	175	340	650
		5	55	165	330	600
		7	50	160	300	550
		10	40	120	230	450
	2	9	40	120	230	450
		12	40	120	230	450
		15	40	120	230	450
		16	60	175	340	650
		20	60	175	340	650
		21	40	120	230	450
		25	55	165	330	600
		28	50	160	300	550
		30	40	120	230	450
		35	50	160	300	550
		40	60	175	340	650
		49	50	160	300	550
		50	55	165	330	600
		70	50	160	300	550
	3	100	55	165	330	600
Instant maximum output torque (Nm)	1, 2, 3	3~100	3 times rated output torque			
Backlash (arc min)	1	3~10	P0≤1, P1≤3, P2≤5			
	2	9~70	P0≤3, P1≤5, P2≤7			
Rated input speed (RPM)	1, 2, 3	3~100	5000	4000	4000	3000
Weight (kg)	1	3~10	1.3	3.9	6.9	17.8
	2	9~70	1.8	5.1	9.1	22.6
Torsional rigidity (Nm/arc min)	1, 2, 3	3~100	6.5	14	27	48
Allowable radial force (N) A			1600	4000	7000	10000
Allowable axial force (N) A			800	2000	3500	5000
Noise value (dB) B			58	60	63	65
Service life (hrs) C			20000			
Use efficiency at full load (%)	1	3~10	≥97			
	2	9~70	≥94			
Operating temperature range (℃)	1, 2, 3	3~100	-15°C~+90°C			
Protection level			IP64			
Lubricating oil			Synthetic lubricating oil			
Moment of inertia (kg X cm²)	1	3	0.180	1.39	3.05	16.19
		4	0.121	0.92	2.02	10.11
		5	0.099	0.77	1.68	7.68
		7	0.089	0.70	1.51	7.05
		10	0.077	0.64	1.37	6.37
	2	9	0.160	1.22	2.78	14.65
		12	0.155	1.19	2.71	14.63
		15	0.150	1.17	2.65	14.58
		16	0.107	0.83	1.86	9.11
		20	0.091	0.73	1.59	8.11
		21	0.149	1.16	2.53	13.44
		25	0.091	0.73	1.58	7.08
		28	0.087	0.69	1.48	6.77
		30	0.077	0.62	1.35	6.34
		35	0.084	0.67	1.44	6.65
		40	0.077	0.64	1.37	6.37
		49	0.084	0.67	1.44	6.65
		50	0.077	0.64	1.35	6.18
		70	0.076	0.62	1.33	6.12
	3	100	0.091	0.72	1.56	7.01

A. When the output speed is 100RPM, the load acts on the center position of the output shaft.
B. The smaller the reduction ratio or the higher the speed, the greater the noise value. (3000RPM, no load, reduction ratio=10)
C. The service life of continuous operation is 10,000 hours.
Note: Ratio100 uses three-stage (L3) style, and the strength is stronger than that at two-stage (L2).

DM series

Standard Type / Through-hole Output Cover

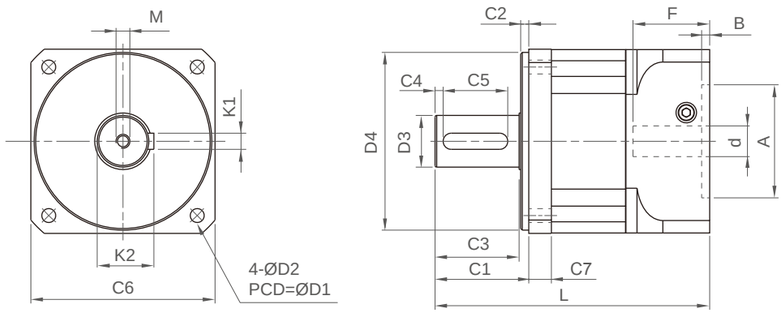

Unit: mm

Size		DM042	DM060	DM070	DM090	DM120	DM150	DM180	DM220
D1		50	70	75	105	130	165	215	250
D2		4.3	5.2	5.2	6.8	8.6	10.5	13	17
※ D3		12	16 (12~16)	16 (12~16)	20 (16~22)	32 (24~35)	42 (38~45)	55 (50~60)	75 (50~75)
D4		35	50	60	80	110	130	160	180
C1		25	35	33	56	58	74	107	124
C2		4	7	5	6	5	4	10	15
C3		20	27	27	49	52	67	96	106
C4		3	3	3	5	5	5	6	7
C5		12	20	20	25	40	45	70	90
C6		42	60	68	94	114	142	180	220
C7		8	15	17	17	18.7	18	20	28
L	L1	98	127	127	167	170.5	262	333	354
	L2	113	149	149	195.5	198.5	314	415.5	460.5
M		M4xP0.7x10	M4xP0.7x10	M4xP0.7x10	M6xP1.0x15	M8xP1.25x20	M12xP1.75x30	M12xP1.75x30	M14xP2.0x35
K1		4	5	5	6	10	12	14	20
K2		13.5	18	18	22.5	35	45	58.5	79.5
d		≤ 8	≤14	≤14	≤24	≤28	≤42	≤55	≤65
△ A		22~30	30~50	30~60	50~80	50~110	95~130	95~150	110~200
B		5	6	6	6	5	10	11	12
△ F		≤25	≤35	≤35	≤47.5	≤47.5	≤66.5	≤82.5	≤88.5

※ : The reducer output shaft can be customized in size and length for customers.
△ : The special size indicated by this symbol varies according to customer needs and servo motors.
Note: Three-stage is not in this table, please contact our sales if it is needed.

Technical Information

Specification	Stage	Ratio	DM042	DM060	DM070	DM090	DM120	DM150	DM180	DM220
Rated output torque (Nm)	1	3	17	44	48	168	260	500	990	1560
		4	24	64	70	188	306	660	1280	2360
		5	23	60	66	180	292	620	1250	2200
		7	21	55	61	176	285	610	1190	1880
		10	17	44	48	168	260	500	990	1560
	2	9	17	44	48	168	260	500	990	1560
		12	17	44	48	168	260	500	990	1560
		15	17	44	48	168	260	500	990	1560
		16	24	64	70	188	306	660	1280	2360
		20	24	64	70	188	306	660	1280	2360
		21	17	44	48	168	260	500	990	1560
		25	23	60	66	180	292	620	1250	2200
		28	21	55	61	176	285	610	1190	1880
		30	17	44	48	168	260	500	990	1560
		35	21	55	61	176	285	610	1190	1880
		40	24	64	70	188	306	660	1280	2360
		49	21	55	61	176	285	610	1190	1880
		50	23	60	66	180	292	620	1250	2200
		70	21	55	61	176	285	610	1190	1880
	3	100	23	60	66	180	292	620	1250	2200
Instant maximum output torque (Nm)	1, 2, 3	3~100	3 times rated output torque							
Backlash (arc min)	1	3~10	≤5	≤5	≤5	≤5	≤5	≤5	≤5	≤5
	2	9~70	≤8	≤8	≤8	≤8	≤8	≤8	≤8	≤8
Rated input speed (RPM)	1, 2, 3	3~100	5000	5000	5000	4000	4000	3000	3000	2000
Weight (kg)	1	3~10	0.5	1.4	2.4	4.0	7.0	17.5	33.4	69.7
	2	9~70	0.6	1.7	3.0	5.0	9.1	22.8	48.4	74.3
Torsional rigidity (Nm/arc min)	1, 2, 3	3~100	3	6.5	7	14	27	48	115	218
Allowable radial force (N) A			800	1600	1600	4000	7000	10000	16000	52000
Allowable axial force (N) A			400	800	800	2000	3500	5000	8000	26000
Noise value (dB) B			56	58	58	60	63	65	67	70
Service life (hrs) C			20000							
Use efficiency at full load (%)	1	3~10	≥97							
	2	9~70	≥94							
Operating temperature range (℃)	1, 2, 3	3~100	-15°C~+90°C							
Protection level			IP64							
Lubricating oil			Synthetic lubricating oil							
Moment of inertia (kg X cm²)	1	3	0.036	0.155	0.179	1.20	2.63	13.96	44.7	109.6
		4	0.025	0.107	0.123	0.81	1.79	8.95	28.6	70.2
		5	0.022	0.090	0.103	0.70	1.53	6.98	22.3	54.6
		7	0.021	0.083	0.095	0.66	1.41	6.59	21.1	51.6
		10	0.018	0.074	0.085	0.61	1.30	6.07	19.4	47.7
	2	9	0.035	0.151	0.173	1.15	2.62	13.82	44.2	108.5
		12	0.033	0.146	0.168	1.12	2.56	13.80	44.1	107.8
		15	0.032	0.141	0.163	1.11	2.50	13.75	44.0	108.0
		16	0.025	0.101	0.116	0.78	1.75	8.59	27.5	67.5
		20	0.022	0.086	0.099	0.69	1.50	7.65	24.5	59.9
		21	0.030	0.129	0.148	1.00	2.18	11.59	37.1	91.0
		25	0.022	0.086	0.099	0.69	1.49	6.68	21.4	52.1
		28	0.020	0.082	0.094	0.66	1.40	6.39	20.4	49.4
		30	0.018	0.073	0.084	0.59	1.29	6.04	19.3	46.7
		35	0.020	0.080	0.092	0.64	1.37	6.33	20.3	49.1
		40	0.018	0.074	0.085	0.61	1.30	6.07	19.4	47.1
		49	0.020	0.080	0.092	0.64	1.37	6.33	20.3	49.1
		50	0.018	0.073	0.084	0.61	1.29	5.89	18.8	45.5
		70	0.018	0.072	0.083	0.59	1.27	5.83	18.7	45.2
	3	100	0.022	0.086	0.099	0.69	1.49	6.68	21.4	51.9

A. When the output speed is 100RPM, the load acts on the center position of the output shaft.
B. The smaller the reduction ratio or the higher the speed, the greater the noise value. (3000RPM, no load, reduction ratio=10)
C. The service life of continuous operation is 10,000 hours.
Note: Ratio100 uses three-stage (L3) style, and the strength is stronger than that at two-stage (L2).

Planetary Gear Reducer

DML series

Standard Type / Perforated Output Cover

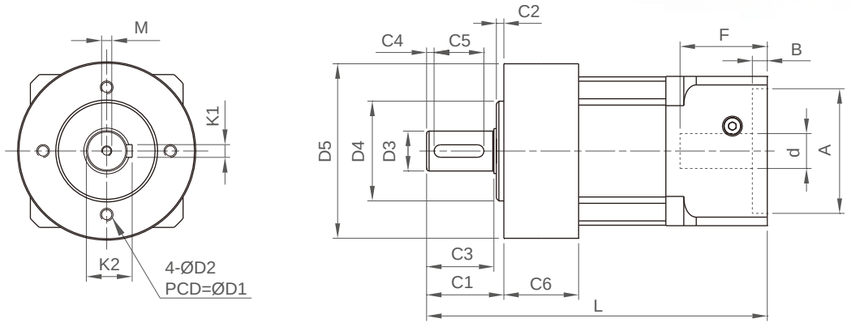

Unit: mm

Size		DML042	DML060	DML090	DML120	DML150	DML180	DML220
D1		44	62	80	108	140	184	210
D2		M4xP0.7	M5xP0.8	M6xP1.0	M8xP1.25	M10xP1.5	M12xP1.75	M16xP2.0
※ D3		12	16 (12~16)	22 (16~22)	32 (24~35)	40 (38~45)	55 (50~60)	75 (50~75)
D4		35	52	68	90	120	160	180
D5		50	70	101	128	162	208	250
C1		24.5	36	46	70	97	100	126
C2		4	6.5	8.5	17.5	15	15	18
C3		19.5	28.5	36.5	51	79	82	105
C4		2	2	3	5	5	6	7
C5		15	25	32	40	65	70	90
C6		19.5	15.5	29.5	39	33	35	45
L	L1	103.5	128.5	169.5	203	300	341	373
	L2	118.5	150.5	198	231	352	423.5	479.5
M		M4xP0.7x10	M5xP0.8x12.5	M8xP1.25x20	M12xP1.75x30	M16xP2.0x40	M20xP2.5x50	M20xP2.5x50
K1		4	5	6	10	12	16	20
K2		13.5	18	24.5	35	43	59	79.5
d		≤8	≤14	≤24	≤28	≤42	≤55	≤65
△ A		22~30	30~50	50~80	50~110	95~130	95~150	110~200
B		5	6	6	5	10	11	12
△ F		≤25	≤35	≤47.5	≤47.5	≤66.5	≤82.5	≤88.5

※：The reducer output shaft can be customized in size and length for customers.
△：The special size indicated by this symbol varies according to customer needs and servo motors.
Note: Three-stage is not in this table, please contact our sales if it is needed.

Technical Information

Specification	Stage	Ratio	DML042	DML060	DML090	DML120	DML150	DML180	DML220
Rated output torque (Nm)	1	3	17	44	168	260	500	990	1560
		4	24	64	188	306	660	1280	2360
		5	23	60	180	292	620	1250	2200
		7	21	55	176	285	610	1190	1880
		10	17	44	168	260	500	990	1560
	2	9	17	44	168	260	500	990	1560
		12	17	44	168	260	500	990	1560
		15	17	44	168	260	500	990	1560
		16	24	64	188	306	660	1280	2360
		20	24	64	188	306	660	1280	2360
		21	17	44	168	260	500	990	1560
		25	23	60	180	292	620	1250	2200
		28	21	55	176	285	610	1190	1880
		30	17	44	168	260	500	990	1560
		35	21	55	176	285	610	1190	1880
		40	24	64	188	306	660	1280	2360
		49	21	55	176	285	610	1190	1880
		50	23	60	180	292	620	1250	2200
		70	21	55	176	285	610	1190	1880
	3	100	23	60	180	292	620	1250	2200
Instant maximum output torque (Nm)	1, 2, 3	3~100	3 times rated output torque						
Backlash (arc min)	1	3~10	≤5	≤5	≤5	≤5	≤5	≤5	≤5
	2	9~70	≤8	≤8	≤8	≤8	≤8	≤8	≤8
Rated input speed (RPM)	1, 2, 3	3~100	5000	5000	4000	4000	3000	3000	2000
Weight (kg)	1	3~10	0.5	1.4	4.0	7.0	17.5	33.4	54.3
	2	9~70	0.6	1.7	5.0	9.1	22.8	48.4	69.7
Torsional rigidity (Nm/arc min)	1, 2, 3	3~100	3	6.5	14	27	48	115	218
Allowable radial force (N) A			720	1440	3600	6300	9000	14400	46800
Allowable axial force (N) A			400	800	2000	3500	5000	8000	26000
Noise value (dB) B			56	58	60	63	65	67	70
Service life (hrs) C			20000						
Use efficiency at full load (%)	1	3~10	≥97						
	2	9~70	≥94						
Operating temperature range (℃)	1, 2, 3	3~100	-15°C~+90°C						
Protection level			IP64						
Lubricating oil			Synthetic lubricating oil						
Moment of inertia (kg X cm²)	1	3	0.036	0.155	1.20	2.63	13.96	44.7	109.6
		4	0.025	0.107	0.81	1.79	8.95	28.6	70.2
		5	0.022	0.090	0.70	1.53	6.98	22.3	54.6
		7	0.021	0.083	0.66	1.41	6.59	21.1	51.6
		10	0.018	0.074	0.61	1.30	6.07	19.4	47.7
	2	9	0.035	0.151	1.15	2.62	13.82	44.2	108.5
		12	0.033	0.146	1.12	2.56	13.80	44.1	107.8
		15	0.032	0.141	1.11	2.50	13.75	44.0	108.0
		16	0.025	0.101	0.78	1.75	8.59	27.5	67.5
		20	0.022	0.086	0.69	1.50	7.65	24.5	59.9
		21	0.030	0.129	1.00	2.18	11.59	37.1	91.0
		25	0.022	0.086	0.69	1.49	6.68	21.4	52.1
		28	0.020	0.082	0.66	1.40	6.39	20.4	49.4
		30	0.018	0.073	0.59	1.29	6.04	19.3	46.7
		35	0.020	0.080	0.64	1.37	6.33	20.3	49.1
		40	0.018	0.074	0.61	1.30	6.07	19.4	47.1
		49	0.020	0.080	0.64	1.37	6.33	20.3	49.1
		50	0.018	0.073	0.61	1.29	5.89	18.8	45.5
		70	0.018	0.072	0.59	1.27	5.83	18.7	45.2
	3	100	0.022	0.086	0.69	1.49	6.68	21.4	51.9

A. When the output speed is 100RPM, the load acts on the center position of the output shaft.
B. The smaller the reduction ratio or the higher the speed, the greater the noise value. (3000RPM, no load, reduction ratio=10)
C. The service life of continuous operation is 10,000 hours.
Note: Ratio100 uses three-stage (L3) style, and the strength is stronger than that at two-stage (L2).

Planetary Gear Reducer

DF series

Standard Type / Flange Output Cover

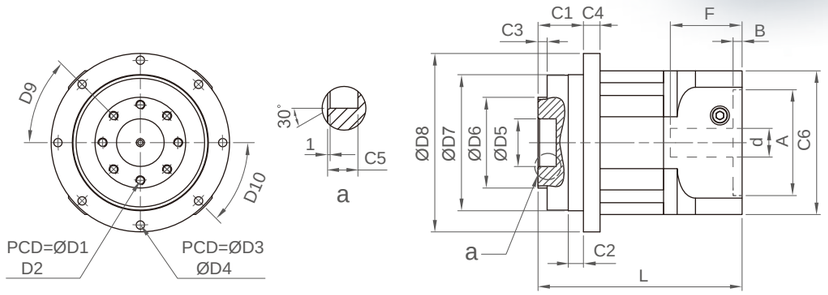

Unit: mm

Size		DF060	DF090	DF120	DF150	DF180	DF220
D1		31.5	50	63	80	125	140
D2		8xM5xP0.8	8xM6xP1.0	12xM6xP1.0	12xM8xP1.25	12xM10xP1.5	12xM16xP2.0
D3		79	109	135	168	233	280
D4		8x4.3	8x5.2	8x5.2	12x6.8	12x8.6	16x13
D5		20	31.5	40	50	80	100
D6		40	63	80	95	160	180
D7		64	90	110	140	200	255
D8		86	118	145	179	247	300
D9		45°	45°	30°	30°	30°	30°
D10		45°	45°	45°	30°	30°	22.5°
C1		19.5	30	29	37	50	66
C2		16.5	10	10	15	15	20
C3		3	6	6	4	8	12
C4		20.5	11	17.7	25	37	32
C5		8	12	12	12	16	20
C6		60	94	114	142	180	220
d		≤14	≤24	≤28	≤42	≤55	≤65
△ A		30~50	50~80	50~100	95~130	95~150	110~200
B		6	6	5	10	11	12
△ F		≤35	≤47.5	≤47.5	≤66.5	≤82.5	≤88.5
L	L1	117	135	140	232	278	300
	L2	139	163.5	168.5	284	360.5	406.5

※：The reducer output shaft can be customized in size and length for customers.
△：The special size indicated by this symbol varies according to customer needs and servo motors.
Note: Three-stage is not in this table, please contact our sales if it is needed.

Technical Information

Specification	Stage	Ratio	DF060	DF090	DF120	DF150	DF180	DF220
Rated output torque (Nm)	1	3	-	-	-	-	-	-
		4	64	188	306	660	1280	2360
		5	60	180	292	620	1250	2200
		7	55	176	285	610	1190	1880
		10	44	168	260	500	990	1560
	2	9	-	-	-	-	-	-
		12	-	-	-	-	-	-
		15	-	-	-	-	-	-
		16	64	188	306	660	1280	2360
		20	64	188	306	660	1280	2360
		21	-	-	-	-	-	-
		25	60	180	292	620	1250	2200
		28	55	176	285	610	1190	1880
		30	-	-	-	-	-	-
		35	55	176	285	610	1190	1880
		40	64	188	306	660	1280	2360
		49	55	176	285	610	1190	1880
		50	60	180	292	620	1250	2200
		70	55	176	285	610	1190	1880
	3	100	60	180	292	620	1250	2200
Instant maximum output torque (Nm)	1, 2, 3	3~100	3 times rated output torque					
Backlash (arc min)	1	3~10	≤5	≤5	≤5	≤5	≤5	≤5
	2	9~70	≤8	≤8	≤8	≤8	≤8	≤8
Rated input speed (RPM)	1, 2, 3	3~100	5000	4000	4000	3000	3000	2000
Weight (kg)	1	3~10	2.3	4.7	9.3	21.2	46.9	77.4
	2	9~70	2.7	6.0	10.9	27.5	61.9	92.7
Torsional rigidity (Nm/arc min)	1, 2, 3	3~100	14	50	82	150	450	1000
Maximum bending torque (Nm)			130	250	450	1300	3000	6000
Allowable axial force (N) A			1100	2800	3000	11000	17000	30000
Noise value (dB) B			58	60	64	65	67	70
Service life (hrs) C			20000					
Use efficiency at full load (%)	1	3~10	≥97					
	2	9~70	≥94					
Operating temperature range (℃)	1, 2, 3	3~100	-15°C~+90°C					
Protection level			IP64					
Lubricating oil			Synthetic lubricating oil					
Moment of inertia (kg X cm²)	1	3	-	-	-	-	-	-
		4	0.13	0.75	2.72	7.62	18.2	46.7
		5	0.11	0.63	2.28	6.39	15.2	39.1
		7	0.09	0.53	1.93	5.41	12.9	33.1
		10	0.08	0.47	1.71	4.81	11.5	29.4
	2	9	-	-	-	-	-	-
		12	-	-	-	-	-	-
		15	-	-	-	-	-	-
		16	0.11	0.63	2.29	6.43	15.3	39.4
		20	0.09	0.54	1.95	5.48	13.1	33.6
		21	-	-	-	-	-	-
		25	0.09	0.54	1.95	5.48	13.1	33.6
		28	0.09	0.51	1.86	5.21	12.4	31.9
		30	-	-	-	-	-	-
		35	0.08	0.48	1.73	4.87	11.6	29.8
		40	0.08	0.44	1.59	4.46	10.6	27.3
		49	0.08	0.48	1.73	4.87	11.6	29.8
		50	0.07	0.43	1.57	4.42	10.5	27.0
		70	0.07	0.43	1.56	4.37	10.4	26.7
	3	100	0.09	0.51	1.86	5.23	12.5	32.0

A. When the output speed is 100RPM, the load acts on the center position of the output shaft.
B. The smaller the reduction ratio or the higher the speed, the greater the noise value. (3000RPM, no load, reduction ratio=10)
C. The service life of continuous operation is 10,000 hours.
Note: Ratio100 uses three-stage (L3) style, and the strength is stronger than that at two-stage (L2).

DS series

Standard Type / Low Temperature Rise

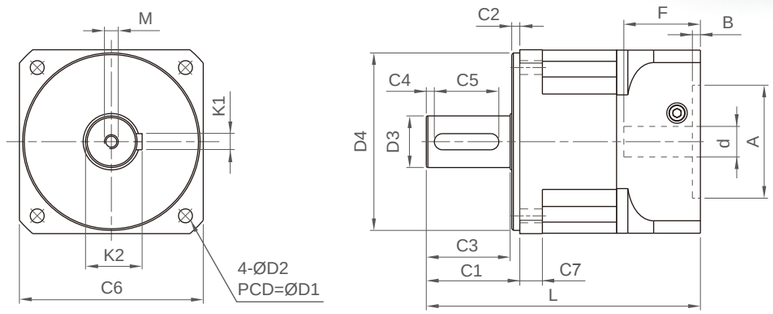

Unit: mm

Size		DS060	DS070	DS090	DS120	DS150	DS180	DS220
D1		70	75	105	130	165	215	250
D2		5.2	5.2	6.8	8.6	10.5	13	17
※ D3		16 (12~16)	16 (12~16)	20 (16~22)	32 (24~35)	42 (38~45)	55 (50~60)	75 (50~75)
D4		50	60	80	110	130	160	180
C1		35	33	56	58	74	107	124
C2		7	5	6	5	4	10	15
C3		27	27	49	52	67	96	106
C4		3	3	5	5	5	6	7
C5		20	20	25	40	45	70	90
C6		60	68	94	114	142	180	220
C7		11	10	17	18.7	18	25	30
L	L1	127	127	167	170.5	262	333	356
	L2	149	149	195.5	198.5	314	415.5	462.5
M		M4xP0.7x10	M4xP0.7x10	M6xP1.0x15	M8xP1.25x20	M12xP1.75x30	M12xP1.75x30	M14xP2.0x35
K1		5	5	6	10	12	14	20
K2		18	18	22.5	35	45	58.5	79.5
d		≤14	≤14	≤24	≤28	≤42	≤55	≤65
△ A		30~50	30~60	50~80	50~110	95~130	95~150	110~200
B		6	6	6	5	10	11	12
△ F		≤35	≤35	≤47.5	≤47.5	≤66.5	≤82.5	≤88.5

※：The reducer output shaft can be customized in size and length for customers.
△：The special size indicated by this symbol varies according to customer needs and servo motors.
Note: Three-stage is not in this table, please contact our sales if it is needed.

Technical Information

Specification	Stage	Ratio	DS060	DS070	DS090	DS120	DS150	DS180	DS220
Rated output torque (Nm)	1	3	44	48	168	260	500	990	1560
		4	64	70	188	306	660	1280	2360
		5	60	66	180	292	620	1250	2200
		7	55	61	176	285	610	1190	1880
		10	44	48	168	260	500	990	1560
	2	9	44	48	168	260	500	990	1560
		12	44	48	168	260	500	990	1560
		15	44	48	168	260	500	990	1560
		16	64	70	188	306	660	1280	2360
		20	64	70	188	306	660	1280	2360
		21	44	48	168	260	500	990	1560
		25	60	66	180	292	620	1250	2200
		28	55	61	176	285	610	1190	1880
		30	44	48	168	260	500	990	1560
		35	55	61	176	285	610	1190	1880
		40	64	70	188	306	660	1280	2360
		49	55	61	176	285	610	1190	1880
		50	60	66	180	292	620	1250	2200
		70	55	61	176	285	610	1190	1880
	3	100	60	66	180	292	620	1250	2200
Instant maximum output torque (Nm)	1, 2, 3	3~100	3 times rated output torque						
Backlash (arc min)	1	3~10	≤5	≤5	≤5	≤5	≤5	≤5	≤5
	2	9~70	≤8	≤8	≤8	≤8	≤8	≤8	≤8
Rated input speed (RPM)	1, 2, 3	3~100	5000	5000	4000	4000	3000	3000	2000
Weight (kg)	1	3~10	1.2	1.4	3.4	5.8	16.0	31.5	48.4
	2	9~70	1.6	2.1	4.4	7.9	20.6	35.7	60.4
Torsional rigidity (Nm/arc min)	1, 2, 3	3~100	6.5	7	14	27	48	115	218
Allowable radial force (N) A			1600	1600	4000	7000	10000	14000	52000
Allowable axial force (N) A			800	800	2000	3500	5000	7000	26000
Noise value (dB) B			58	58	60	63	65	67	70
Service life (hrs) C			20000						
Use efficiency at full load (%)	1	3~10	≥97						
	2	9~70	≥94						
Operating temperature range (℃)	1, 2, 3	3~100	-15°C~+90°C						
Protection level			IP64						
Lubricating oil			Synthetic lubricating oil						
Moment of inertia (kg X cm²)	1	3	0.155	0.179	1.20	2.63	13.96	44.7	109.6
		4	0.107	0.123	0.81	1.79	8.95	28.6	70.2
		5	0.090	0.103	0.70	1.53	6.98	22.3	54.6
		7	0.083	0.095	0.66	1.41	6.59	21.1	51.6
		10	0.074	0.085	0.61	1.30	6.07	19.4	47.7
	2	9	0.151	0.173	1.15	2.62	13.82	44.2	108.5
		12	0.146	0.168	1.12	2.56	13.80	44.1	107.8
		15	0.141	0.163	1.11	2.50	13.75	44.0	108.0
		16	0.101	0.116	0.78	1.75	8.59	27.5	67.5
		20	0.086	0.099	0.69	1.50	7.65	24.5	59.9
		21	0.129	0.148	1.00	2.18	11.59	37.1	91.0
		25	0.086	0.099	0.69	1.49	6.68	21.4	52.1
		28	0.082	0.094	0.66	1.40	6.39	20.4	49.4
		30	0.073	0.084	0.59	1.29	6.04	19.3	46.7
		35	0.080	0.092	0.64	1.37	6.33	20.3	49.1
		40	0.074	0.085	0.61	1.30	6.07	19.4	47.1
		49	0.080	0.092	0.64	1.37	6.33	20.3	49.1
		50	0.073	0.084	0.61	1.29	5.89	18.8	45.5
		70	0.072	0.083	0.59	1.27	5.83	18.7	45.2
	3	100	0.086	0.099	0.69	1.49	6.68	21.4	51.9

A. When the output speed is 100RPM, the load acts on the center position of the output shaft.
B. The smaller the reduction ratio or the higher the speed, the greater the noise value. (3000RPM, no load, reduction ratio=10)
C. The service life of continuous operation is 10,000 hours.
Note: Ratio100 uses three-stage (L3) style, and the strength is stronger than that at two-stage (L2).

DH series

General Purpose Type / Through-hole Output Cover

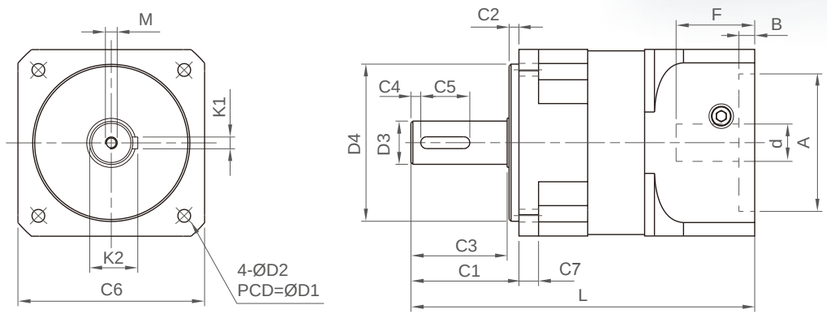

Unit: mm

Size		DH042	DH060	DH080	DH090	DH120	DH150
D1		50	70	90	105	130	165
D2		4.3	5.2	6.8	6.8	8.6	10.5
※ D3		12	16(12~16)	20(18~24)	20(18~24)	32(24~35)	42(38~45)
D4		35	50	70	80	110	130
C1		25	35	56	55	58	74
C2		4	7	6	5	5	4
C3		20	27	49	49	52	67
C4		3	3	5	5	5	5
C5		12	20	25	25	40	45
C6		42	62	79.5	95	115	142
C7		8	9.6	16	10	18.7	23.5
L	L1	95	118	173.5	172.5	170.5	262
	L2	109	135.5	199.5	198.5	198.5	314
M		M4xP0.7x10	M4xP0.7x10	M6xP1.0x15	M6xP1.0x15	M8xP1.25x20	M12xP1.75x30
K1		4	5	6	6	10	12
K2		13.5	18	22.5	22.5	35	45
d		≤8	≤14	≤24	≤24	≤28	≤42
△ A		22~30	30~50	50~70	50~80	50~110	95~130
B		5	6	8	8	5	10
△ F		≤25	≤32	≤40	≤40	≤47.5	≤66.5

※：The reducer output shaft can be customized in size and length for customers.
△：The special size indicated by this symbol varies according to customer needs and servo motors.
Note: Three-stage is not in this table, please contact our sales if it is needed.

Technical Information

Specification	Stage	Ratio	DH042	DH060	DH080	DH090	DH120	DH150
Rated output torque (Nm)	1	3	17	40	115	140	260	500
		4	24	50	135	168	306	660
		5	23	44	132	166	292	630
		7	21	42	126	155	285	610
		10	17	40	115	140	260	500
	2	9	17	40	115	140	260	500
		12	17	40	115	140	260	500
		15	17	40	115	140	260	500
		16	24	50	135	168	306	660
		20	24	50	135	168	306	660
		21	17	40	115	140	260	500
		25	23	44	132	166	292	630
		28	21	42	126	155	285	610
		30	17	40	115	140	260	500
		35	21	42	126	155	285	610
		40	24	50	135	168	306	660
		49	21	42	126	155	285	610
		50	23	44	132	166	292	630
		70	21	42	126	155	285	610
	3	100	23	44	132	166	292	630
Instant maximum output torque (Nm)	1, 2, 3	3~100	3 times rated output torque					
Backlash (arc min)	1	3~10	≤10	≤10	≤10	≤10	≤10	≤10
	2	9~70	≤12	≤12	≤12	≤12	≤12	≤12
Rated input speed (RPM)	1, 2, 3	3~100	5000	5000	4000	4000	4000	3000
Weight (kg)	1	3~10	0.4	1.1	2.6	3.4	6.6	16.3
	2	9~70	0.7	1.4	3.3	4.5	8.5	20.7
Torsional rigidity (Nm/arc min)	1, 2, 3	3~100	0.8	2.1	5	7	15	30
Allowable radial force (N) A			500	1100	1400	1600	5000	10000
Allowable axial force (N) A			250	550	700	800	2500	5000
Noise value (dB) B			56	58	60	60	63	65
Service life (hrs) C			20000					
Use efficiency at full load (%)	1	3~10	≥97					
	2	9~70	≥94					
Operating temperature range (℃)	1, 2, 3	3~100	-15°C~+90°C					
Protection level			IP64					
Lubricating oil			Synthetic lubricating oil					
Moment of inertia (kg X cm²)	1	3	0.031	0.135	0.77	0.92	2.63	12.14
		4	0.022	0.093	0.52	0.62	1.79	7.78
		5	0.019	0.078	0.45	0.54	1.53	6.07
		7	0.018	0.072	0.42	0.50	1.41	5.73
		10	0.016	0.064	0.39	0.47	1.30	5.28
	2	9	0.030	0.131	0.74	0.89	2.62	12.02
		12	0.029	0.127	0.72	0.86	2.56	12.00
		15	0.028	0.123	0.71	0.85	2.50	11.96
		16	0.022	0.088	0.50	0.60	1.75	7.47
		20	0.019	0.075	0.44	0.53	1.50	6.65
		21	0.026	0.112	0.64	0.77	2.18	10.08
		25	0.019	0.075	0.44	0.53	1.49	5.81
		28	0.017	0.071	0.42	0.50	1.40	5.56
		30	0.016	0.063	0.38	0.46	1.29	5.25
		35	0.017	0.070	0.41	0.49	1.37	5.50
		40	0.016	0.064	0.39	0.47	1.30	5.28
		49	0.017	0.070	0.41	0.49	1.37	5.50
		50	0.016	0.063	0.39	0.47	1.29	5.12
		70	0.016	0.063	0.38	0.46	1.27	5.07
	3	100	0.019	0.075	0.44	0.53	1.49	5.81

A. When the output speed is 100RPM, the load acts on the center position of the output shaft.
B. The smaller the reduction ratio or the higher the speed, the greater the noise value. (3000RPM, no load, reduction ratio=10)
C. The service life of continuous operation is 10,000 hours.
Note: Ratio100 uses three-stage (L3) style, and the strength is stronger than that at two-stage (L2).

DL series

General Purpose Type / Perforated Output Cover

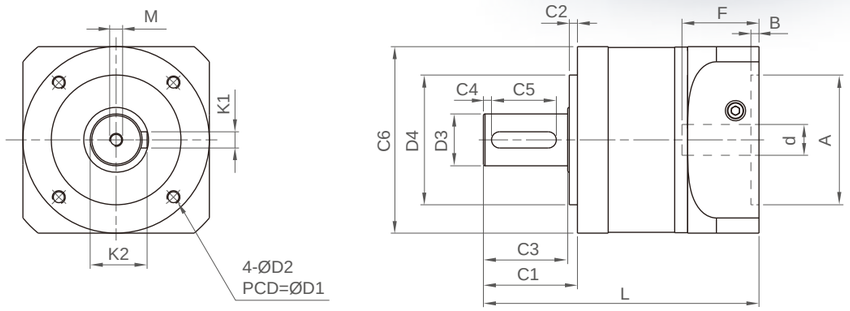

Unit: mm

Size		DL042	DL060	DL080	DL090	DL120	DL150
D1		34	50	70	70	100	145
D2		M4 x P0.7	M5 x P0.8	M6 x P1.0	M6 x P1.0	M8 x P1.25	M12 x P1.75
※ D3		12	16 (12~16)	20 (18~24)	20 (18~24)	32 (24~35)	42 (38~45)
D4		26	40	60	60	80	130
C1		23	31	56	55	58	74
C2		2	3	6	5	5	4
C3		20	27	49	49	52	67
C4		3	3	5	5	5	5
C5		12	20	25	25	40	45
C6		42	60	78.8	93	115	159
L	L1	95	118	173.5	172.5	170.5	262
	L2	109	135.5	199.5	198.5	198.5	314
M		M4xP0.7x10	M4xP0.7x10	M6xP1.0x15	M6xP1.0x15	M8xP1.25x20	M12xP1.75x30
K1		4	5	6	6	10	12
K2		13.5	18	22.5	22.5	35	45
d		≤8	≤14	≤24	≤24	≤28	≤42
△ A		22~30	30~50	50~70	50~80	50~110	95~130
B		5	6	8	8	5	10
△ F		≤25	≤32	≤40	≤40	≤47.5	≤66.5

※：The reducer output shaft can be customized in size and length for customers.
△：The special size indicated by this symbol varies according to customer needs and servo motors.
Note: Three-stage is not in this table, please contact our sales if it is needed.

Technical Information

Specification	Stage	Ratio	DL042	DL060	DL080	DL090	DL120	DL150
Rated output torque (Nm)	1	3	17	40	115	140	260	500
		4	24	50	135	168	306	660
		5	23	44	132	166	292	630
		7	21	42	126	155	285	610
		10	17	40	115	140	260	500
	2	9	17	40	115	140	260	500
		12	17	40	115	140	260	500
		15	17	40	115	140	260	500
		16	24	50	135	168	306	660
		20	24	50	135	168	306	660
		21	17	40	115	140	260	500
		25	23	44	132	166	292	630
		28	21	42	126	155	285	610
		30	17	40	115	140	260	500
		35	21	42	126	155	285	610
		40	24	50	135	168	306	660
		49	21	42	126	155	285	610
		50	23	44	132	166	292	630
		70	21	42	126	155	285	610
	3	100	23	44	132	166	292	630
Instant maximum output torque (Nm)	1, 2, 3	3~100	3 times rated output torque					
Backlash (arc min)	1	3~10	≤10	≤10	≤10	≤10	≤10	≤10
	2	9~70	≤12	≤12	≤12	≤12	≤12	≤12
Rated input speed (RPM)	1, 2, 3	3~100	5000	5000	4000	4000	4000	3000
Weight (kg)	1	3~10	0.4	1.1	2.6	3.8	6.5	16.1
	2	9~70	0.6	1.4	3.3	4.7	8.4	20.5
Torsional rigidity (Nm/arc min)	1, 2, 3	3~100	0.8	2.1	5	7	15	30
Allowable radial force (N) A			500	1100	1400	1600	5000	10000
Allowable axial force (N) A			250	550	700	800	2500	5000
Noise value (dB) B			56	58	60	60	63	65
Service life (hrs) C			20000					
Use efficiency at full load (%)	1	3~10	≥97					
	2	9~70	≥94					
Operating temperature range (℃)	1, 2, 3	3~100	-15°C~+90°C					
Protection level			IP64					
Lubricating oil			Synthetic lubricating oil					
Moment of inertia (kg X cm²)	1	3	0.031	0.135	0.77	0.92	2.63	12.14
		4	0.022	0.093	0.52	0.62	1.79	7.78
		5	0.019	0.078	0.45	0.54	1.53	6.07
		7	0.018	0.072	0.42	0.50	1.41	5.73
		10	0.016	0.064	0.39	0.47	1.30	5.28
	2	9	0.030	0.131	0.74	0.89	2.62	12.02
		12	0.029	0.127	0.72	0.86	2.56	12.00
		15	0.028	0.123	0.71	0.85	2.50	11.96
		16	0.022	0.088	0.50	0.60	1.75	7.47
		20	0.019	0.075	0.44	0.53	1.50	6.65
		21	0.026	0.112	0.64	0.77	2.18	10.08
		25	0.019	0.075	0.44	0.53	1.49	5.81
		28	0.017	0.071	0.42	0.50	1.40	5.56
		30	0.016	0.063	0.38	0.46	1.29	5.25
		35	0.017	0.070	0.41	0.49	1.37	5.50
		40	0.016	0.064	0.39	0.47	1.30	5.28
		49	0.017	0.070	0.41	0.49	1.37	5.50
		50	0.016	0.063	0.39	0.47	1.29	5.12
		70	0.016	0.063	0.38	0.46	1.27	5.07
	3	100	0.019	0.075	0.44	0.53	1.49	5.81

A. When the output speed is 100RPM, the load acts on the center position of the output shaft.
B. The smaller the reduction ratio or the higher the speed, the greater the noise value. (3000RPM, no load, reduction ratio=10)
C. The service life of continuous operation is 10,000 hours.
Note: Ratio100 uses three-stage (L3) style, and the strength is stronger than that at two-stage (L2).

DN series

General Purpose Type / High Load Design

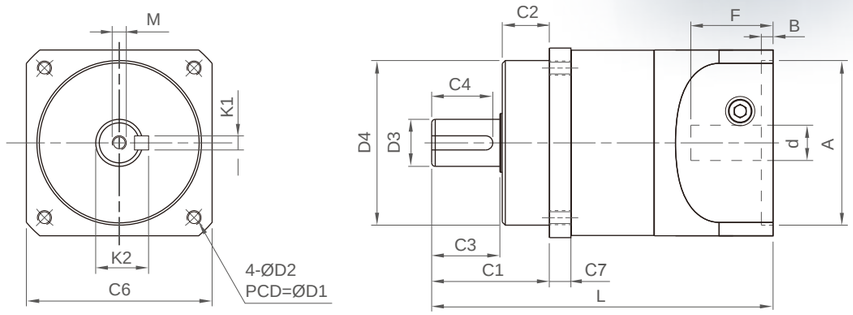

Unit: mm

Size		DN060	DN080	DN100
D1		70	90	115
D2		M5 x P0.8	M6 x P1.0	M8 x P1.25
※ D3		16 (12~16)	19 (18~22)	24 (22~30)
D4		50	70	90
C1		32	50	55
C2		11	20	14
C3		20	29	40
C4		18	25	35
C6		62	79.5	98
C7		13.5	9	15.4
L	L1	116	149.5	165.5
	L2	135.5	179	194
M		M4xP0.7x10	M6xP1.0x15	M6xP1.0x15
K1		5	6	8
K2		18	21.5	27
d		≤ 14	≤ 24	≤ 28
△ A		30~50	50~70	50~80
B		6	8	8
△ F		≤32	≤40	≤47

※：The reducer output shaft can be customized in size and length for customers.
△：The special size indicated by this symbol varies according to customer needs and servo motors.
Note: Three-stage is not in this table, please contact our sales if it is needed.

Technical Information

Specification	Stage	Ratio	DN060	DN080	DN100
Rated output torque (Nm)	1	4	50	135	176
		5	44	132	174
		7	42	126	163
		9	40	115	147
		10	40	115	147
	2	12	40	115	147
		15	40	115	147
		16	50	135	176
		20	50	135	176
		21	40	115	147
		25	44	132	174
		28	42	126	163
		30	40	115	147
		35	42	126	163
		36	40	115	147
		40	50	135	176
		49	42	126	163
		50	44	132	174
		70	42	126	163
	3	100	44	132	174
Instant maximum output torque (Nm)	1, 2, 3	4~100			
Backlash (arc min)	1	4~10	≤10	≤10	≤10
	2	12~70	≤12	≤12	≤12
Rated input speed (RPM)	1, 2, 3	4~100	5000	4000	4000
Weight (kg)	1	4~10	1.2	2.3	4.1
	2	12~70	1.5	3.1	5.2
Torsional rigidity (Nm/arc min)	1, 2, 3	4~100	7	8	27
Allowable radial force (N) [A]			1800	2600	4200
Allowable axial force (N) [A]			900	1300	2100
Noise value (dB) [B]			58	59	60
Service life (hrs) [C]			20000		
Use efficiency at full load (%)	1	4~10	≥97		
	2	12~70	≥94		
Operating temperature range (℃)	1, 2, 3	4~100	-15°C~+90°C		
Protection level			IP64		
Lubricating oil					
Moment of inertia (kg X cm²)	1	4	0.093	0.52	0.85
		5	0.078	0.45	0.74
		7	0.072	0.42	0.69
		9	0.065	0.40	0.65
		10	0.064	0.39	0.64
	2	12	0.127	0.72	1.18
		15	0.123	0.71	1.16
		16	0.088	0.50	0.82
		20	0.075	0.44	0.72
		21	0.112	0.64	1.05
		25	0.075	0.44	0.72
		28	0.071	0.42	0.69
		30	0.063	0.38	0.62
		35	0.070	0.41	0.67
		40	0.064	0.39	0.64
		49	0.070	0.41	0.67
		50	0.063	0.39	0.64
		70	0.063	0.38	0.62
	3	100	0.075	0.44	0.72

A. When the output speed is 100RPM, the load acts on the center position of the output shaft.
B. The smaller the reduction ratio or the higher the speed, the greater the noise value. (3000RPM, no load, reduction ratio=10)
C. The service life of continuous operation is 10,000 hours.
Note: Ratio100 uses three-stage (L3) style, and the strength is stronger than that at two-stage (L2).

Spiral Bevel Gear Reducer
(**RA** series)

▶ Product Features

- Aluminum alloy material can improve heat dissipation capacity and slow down temperature rise
- Good reciprocating positioning accuracy
- Customized input end, able to work with various motors
- The oil seal adopts a special design, no maintenance or replacement of lubricating oil is required under normal use
- Diversified output shafts can meet the needs in various situations
- Provide single-stage ratio 1~5 design for the product ratio to be more diversified
- Provide ball and tapered roller bearings for customer's selection
- Provide three accuracy levels for customer's selection

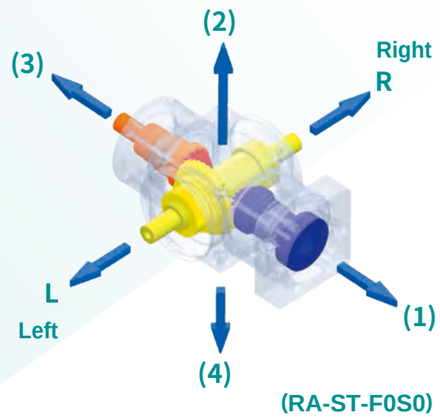

(RA-ST-F0S0)

▶ Model Description

RA065	ST	F(1) 0(2) S(3) 0(4)	R005	D1-D2-D3-D4(L1/L2)
Model	Output style & position	Input style & position	Ratio	Input size (work with the motor)
RA065 RA090 RA110 RA140 RA170 RA210	Style S Solid shaft H Hollow shaft with keyway C Keyless bushing Position L Left (as indicated at the top right) R Right (as indicated at the top right) T Dual	Style 0 No input design S Solid shaft input (ratio 1~5) F Flange input (ratio 1~5) G Reducer input (above ratio 6) 1/2/3 Stage of reducer Position (1) ~ (4), refer to the upper right diagram	Demand reduction ratio	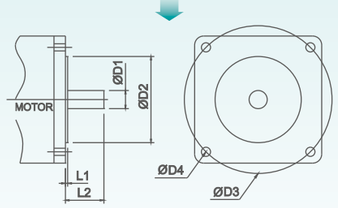

▶ **RA** Modularized Bevel Gearhead

PHT Spiral Bevel Gear Reducer has diversified output forms of steering heads. There are also pure steering gears available to customers who already have reducers to increase the width of application for the original products and reduce inventory.

S	H	C
	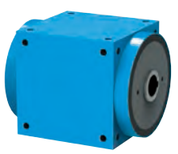	
Solid shaft	Hollow shaft with keyway	Keyless bushing

RA series
Summary Table

RA-ST-S series

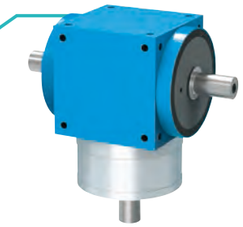

- Output: Double solid shaft
- Input: Solid shaft
- Ratio: 1 ~ 5 ratio
- Backlash: 3 ~ 9 arcmin
- Size: 065, 090, 110, 140, 170, 210
- Noise: 68 ~ 80 dB
- Life: 30,000 hrs.

RA-SL/SR-S series

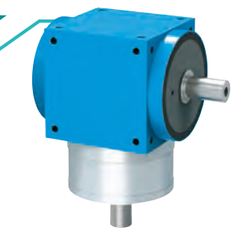

- Output: Single solid shaft
- Input: Solid shaft
- Ratio: 1 ~ 5 ratio
- Backlash: 3 ~ 9 arcmin
- Size: 065, 090, 110, 140, 170, 210
- Noise: 68 ~ 80 dB
- Life: 30,000 hrs.

RA-HT-S series

- Output: Hollow shaft with keyway
- Input: Solid shaft
- Ratio: 1 ~ 5 ratio
- Backlash: 3 ~ 9 arcmin
- Size: 065, 090, 110, 140, 170, 210
- Noise: 68 ~ 80 dB
- Life: 30,000 hrs.

RA-CT-S series

- Output: Keyless bushing
- Input: Solid shaft
- Ratio: 1 ~ 5 ratio
- Backlash: 3 ~ 9 arcmin
- Size: 065, 090, 110, 140, 170, 210
- Noise: 68 ~ 80 dB
- Life: 30,000 hrs.

RA-ST-S0S0 series

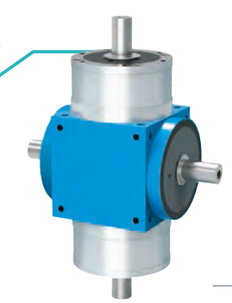

- Output: Double solid shaft
- Input: Double solid shaft
- Ratio: 1 ~ 5 ratio
- Backlash: 3 ~ 9 arcmin
- Size: 065, 090, 110, 140, 170, 210
- Noise: 68 ~ 80 dB
- Life: 30,000 hrs.

RA series
Summary Table

RA-SL/SR-S0S0 series

- Output: Single solid shaft
- Input: Double solid shaft
- Ratio: 1 ~ 5 ratio
- Backlash: 3 ~ 9 arcmin
- Size: 065, 090, 110, 140, 170, 210
- Noise: 68 ~ 80 dB
- Life: 30,000 hrs.

RA-ST-F series

- Output: Double solid shaft
- Input: Flange type
- Ratio: 1 ~ 5 ratio
- Backlash: 3 ~ 9 arcmin
- Size: 065, 090, 110, 140, 170, 210
- Noise: 68 ~ 80 dB
- Life: 30,000 hrs.

RA-SL/SR-F series

- Output: Single solid shaft
- Input: Flange type
- Ratio: 1 ~ 5 ratio
- Backlash: 3 ~ 9 arcmin
- Size: 065, 090, 110, 140, 170, 210
- Noise: 68 ~ 80 dB
- Life: 30,000 hrs.

RA-HT-F series

- Output: Hollow shaft with keyway
- Input: Flange type
- Ratio: 1 ~ 5 ratio
- Backlash: 3 ~ 9 arcmin
- Size: 065, 090, 110, 140, 170, 210
- Noise: 68 ~ 80 dB
- Life: 30,000 hrs.

RA-CT-F series

- Output: Keyless bushing
- Input: Flange type
- Ratio: 1 ~ 5 ratio
- Backlash: 3 ~ 9 arcmin
- Size: 065, 090, 110, 140, 170, 210
- Noise: 68 ~ 80 dB
- Life: 30,000 hrs.

RA-ST-G series

- Output: Double solid shaft
- Input: Reducer
- Ratio: 6 ~ 500 ratio
- Backlash: 5 ~ 11 arcmin
- Size: 065, 090, 110, 140, 170, 210
- Noise: 8 ~ 80 dB
- Life: 30,000 hrs.

RA-SL/SR-G series

- Output: Single solid shaft
- Input: Reducer
- Ratio: 6 ~ 500 ratio
- Backlash: 5 ~ 11 arcmin
- Size: 065, 090, 110, 140, 170, 210
- Noise: 68 ~ 80 dB
- Life: 30,000 hrs.

RA-HT-G series

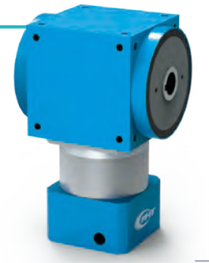

- Output: Hollow shaft with keyway
- Input: Reducer
- Ratio: 6 ~ 500 ratio
- Backlash: 5 ~ 11 arcmin
- Size: 065, 090, 110, 140, 170, 210
- Noise: 68 ~ 80 dB
- Life: 30,000 hrs.

RA-CT-G series

- Output: Keyless bushing
- Input: Reducer
- Ratio: 6 ~ 500 ratio
- Backlash: 5 ~ 11 arcmin
- Size: 065, 090, 110, 140, 170, 210
- Noise: 68 ~ 80 dB
- Life: 30,000 hrs.

RA-S/F series

Single-stage Reducer / Technical Information

Specification	Ratio	065	090	110	140	170	210
Rated output torque (Nm)	1	25	78	150	360	585	1,300
	2	24	68	150	330	544	1,220
	3	18	54	120	270	450	1,020
	4	13	48	100	224	376	860
	5	12	40	85	196	320	740
Instant maximum output torque (Nm)	1~5	3 times rated output torque					
Backlash (arc min)	P0	≤4	≤3	≤3	≤3	≤3	≤3
	P1[S]	≤6	≤6	≤6	≤6	≤6	≤6
	P2	≤9	≤9	≤9	≤9	≤9	≤9
Maximum input speed (RPM)	1~5	7500	5500	4500	3500	3000	2200
Allowable radial force-ball bearing(N)	1~5	450	850	1350	2400	3300	5750
Allowable axial force-ball bearing(N)	1~5	225	425	675	1200	1650	2875
Allowable radial force-tapered roller bearing(N)[S]	1~5	900	1700	2700	4800	6600	11500
Allowable axial force-tapered roller bearing(N)[S]	1~5	450	850	1350	2400	3300	5750
Noise value (dB) [A]	1~5	≤68	≤74	≤76	≤76	≤78	≤80
Service life (hrs) [B]	1~5	30000					
Use efficiency at full load (%)	1~5	≥98%					
Operating temperature range (°C)	1~5	-15°C ~ +90°C					
Lubricating oil	1~5	Synthetic lubricating oil					
Moment of inertia (kg x cm²)	1	0.51	3.16	7.70	23.6	59.0	195
	2	0.44	2.70	6.31	17.8	45.4	140
	3	0.43	2.66	6.17	17.2	44.0	135
	4	0.43	2.65	6.13	17.1	43.7	134
	5	0.30	2.65	6.12	17.0	43.6	133

A. The smaller the reduction ratio or the higher the speed, the greater the noise value. (1500RPM, no load, reduction ratio=5)
B. The service life of continuous operation is 15,000 hours. S. Standard

RA-G series

Two-stage Reducer / Technical Information

Specification	Ratio	065	090	110	140	170	210
Rated output torque (Nm)	10	24	68	150	330	544	1,220
	15	18	54	120	270	450	1,020
	20	24	68	150	330	544	1,220
	25	12	40	85	196	320	740
	30	18	54	120	270	450	1,020
	40	13	48	100	224	376	860
	50	12	40	85	196	320	740
Instant maximum output torque (Nm)	10~50	3 times rated output torque					
Backlash (arc min)	P0	≤6	≤5	≤5	≤5	≤5	≤5
	P1[S]	≤8	≤8	≤8	≤8	≤8	≤8
	P2	≤11	≤11	≤11	≤11	≤11	≤11
Maximum input speed (RPM)	10~50	8000	6000	6000	6000	6000	4800
Allowable radial force-ball bearing(N)	10~50	450	850	1350	2400	3300	5750
Allowable axial force-ball bearing(N)	10~50	225	425	675	1200	1650	2875
Allowable radial force-tapered roller bearing(N)[S]	10~50	900	1700	2700	4800	6600	11500
Allowable axial force-tapered roller bearing(N)[S]	10~50	450	850	1350	2400	3300	5750
Noise value (dB) [A]	10~50	≤68	≤74	≤76	≤76	≤78	≤80
Service life (hrs) [B]	10~50	30000					
Use efficiency at full load (%)	10~50	90%~94%					
Operating temperature range (°C)	10~50	-15°C ~ +90°C					
Lubricating oil	10~50	Synthetic lubricating oil					
Moment of inertia (kg x cm²)	10	0.18	0.55	0.74	1.18	4.52	13.0
	15	0.18	0.55	0.74	1.16	4.47	12.8
	20	0.18	0.55	0.74	1.15	4.46	12.8
	25	0.17	0.55	0.73	1.15	4.45	12.8
	30	0.13	0.47	0.50	0.61	3.01	8.38
	40	0.13	0.47	0.50	0.61	3.01	8.37
	50	0.13	0.47	0.50	0.61	3.01	8.36

A. The smaller the reduction ratio or the higher the speed, the greater the noise value. (1500RPM, no load, reduction ratio=50)
B. The service life of continuous operation is 15,000 hours. S. Standard
Note 1: This table only lists commonly used ratios. If you have other needs, please contact our sales representatives.

Spiral Bevel Gear Reducer

RA-ST-S series

Double Solid Shaft Output / Solid Shaft Input

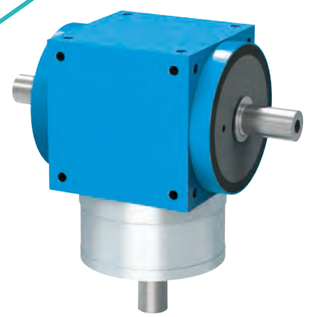

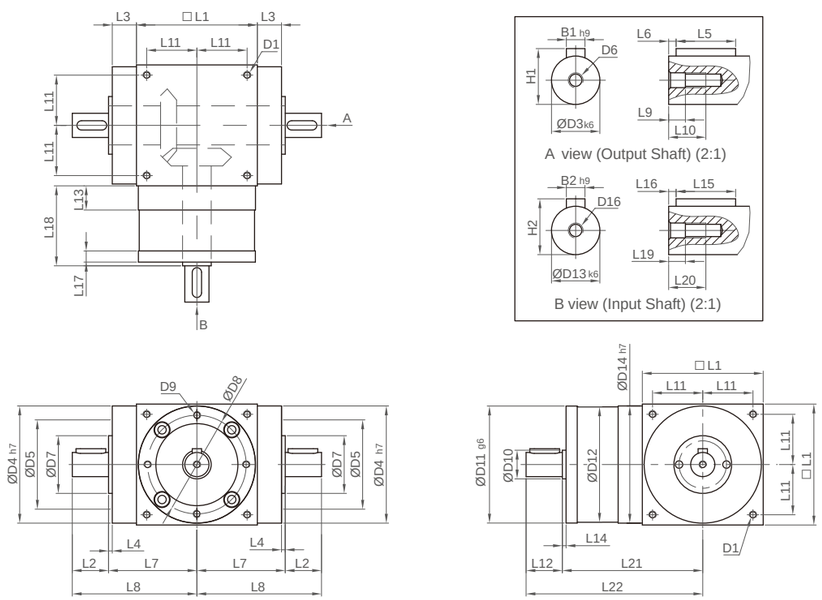

Unit: mm

Size	RA065	RA090	RA110	RA140	RA170	RA210
D1	M4	M6	M8	M10	M12	M16
D3 k6	13	18	22	32	40	50
D4 h7	63	88	108	135	165	205
D5	48	60	90	110	122	130
D6	M4	M5	M8	M12	M16	M16
D7	21	28	33	47	55	75
D8	53	76	95	92	114	142
D9	4 x M4 x L10	4 x M5 x L12.5	6 x M6 x L15	6 x M6 x L15	6 x M8 x L20	6 x M8 x L20
D10	15.4	25.8	35.8	49	59.3	79.3
D11 g6	62.9	87	107	103	127	158
D12	62	86	106	104	128	160
D13 k6	13	18	22	32	40	50
D14 h7	63	88	108	135	165	205
D16	M4	M5	M8	M12	M16	M16
L1	65	90	110	140	170	210
L2	19.5	35	40	50	60	75
L3	13	15	15	15	15	20
L4	2	2	2	2	2	2
L5	16	28	32	45	50	70
L6	2	3.5	4	2.5	5	2.5
L7	47.5	62	72	87	102	127
L8	67	97	112	137	162	202
L9	4.5	4.8	7.2	10	12	12
L10	10	12.5	20	30	40	40
L11	27	36	44	55	67	85
L12	19.5	35	40	50	60	75
L13	13	15	15	15	15	20
L14	2	2	2	2	2	2
L15	16	28	32	45	50	70
L16	2	3.5	4	2.5	5	2.5
L17	6	8	8	10	10	10
L18	43	55	60	60	70	90
L19	4.5	4.8	7.2	10	12	12
L20	10	12.5	20	30	40	40
L21	75.5	100	115	130	155	195
L22	95	135	155	180	215	270
B1 h9	5	6	6	10	12	14
B2 h9	5	6	6	10	12	14
H1	15	20.5	24.5	35	43	53.5
H2	15	20.5	24.5	35	43	53.5

Note: The output/input shaft size can be custom designed. Please contact the sales representative.

Spiral Bevel Gear Reducer

RA-SL/SR-S series

Single Solid Shaft Output / Solid Shaft Input

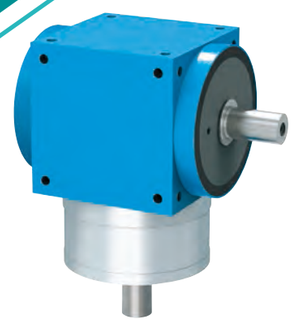

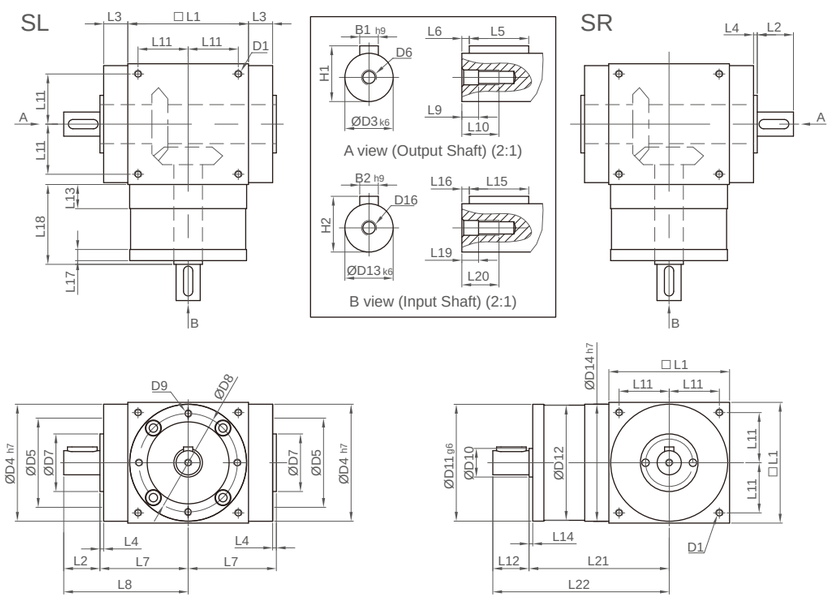

Unit: mm

Size	RA065	RA090	RA110	RA140	RA170	RA210
D1	M4	M6	M8	M10	M12	M16
D3 k6	13	18	22	32	40	50
D4 h7	63	88	108	135	165	205
D5	48	60	90	110	122	130
D6	M4	M5	M8	M12	M16	M16
D7	21	28	33	47	55	75
D8	53	76	95	92	114	142
D9	4 x M4 x L10	4 x M5 x L12.5	6 x M6 x L15	6 x M6 x L15	6 x M8 x L20	6 x M8 x L20
D10	15.4	25.8	35.8	49	59.3	79.3
D11 g6	62.9	87	107	103	127	158
D12	62	86	106	104	128	160
D13 k6	13	18	22	32	40	50
D14 h7	63	88	108	135	165	205
D16	M4	M5	M8	M12	M16	M16
L1	65	90	110	140	170	210
L2	19.5	35	40	50	60	75
L3	13	15	15	15	15	20
L4	2	2	2	2	2	2
L5	16	28	32	45	50	70
L6	2	3.5	4	2.5	5	2.5
L7	47.5	62	72	87	102	127
L8	67	97	112	137	162	202
L9	4.5	4.8	7.2	10	12	12
L10	10	12.5	20	30	40	40
L11	27	36	44	55	67	85
L12	19.5	35	40	50	60	75
L13	13	15	15	15	15	20
L14	2	2	2	2	2	2
L15	16	28	32	45	50	70
L16	2	3.5	4	2.5	5	2.5
L17	6	8	8	10	10	10
L18	43	55	60	60	70	90
L19	4.5	4.8	7.2	10	12	12
L20	10	12.5	20	30	40	40
L21	75.5	100	115	130	155	195
L22	95	135	155	180	215	270
B1 h9	5	6	6	10	12	14
B2 h9	5	6	6	10	12	14
H1	15	20.5	24.5	35	43	53.5
H2	15	20.5	24.5	35	43	53.5

Note: The output/input shaft size can be custom designed. Please contact the sales representative.

Spiral Bevel Gear Reducer

RA-HT-S series

Hollow Shaft Output with Keyway / Solid Shaft Input

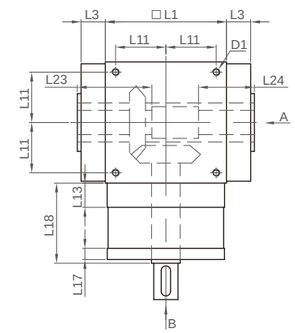

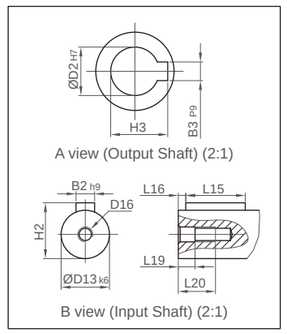

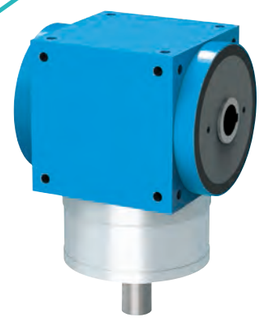

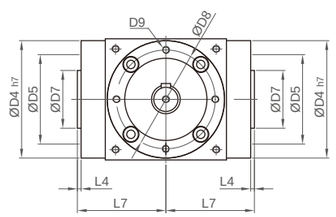

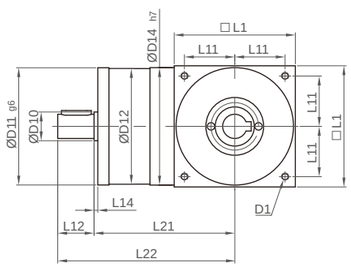

Unit: mm

Size	RA065	RA090	RA110	RA140	RA170	RA210
D1	M4	M6	M8	M10	M12	M16
D2 H7	13	18	22	32	40	50
D4 h7	63	88	108	135	165	205
D5	48	60	90	110	122	130
D7	21	28	33	47	55	75
D8	53	76	95	92	114	142
D9	4 x M4 x L10	4 x M5 x L12.5	6 x M6 x L15	6 x M6 x L15	6 x M8 x L20	6 x M8 x L20
D10	15.4	25.8	35.8	49	59.3	79.3
D11 g6	62.9	87	107	103	127	158
D12	62	86	106	104	128	160
D13 k6	13	18	22	32	40	50
D14 h7	63	88	108	135	165	205
D16	M4	M5	M8	M12	M16	M16
L1	65	90	110	140	170	210
L3	13	15	15	15	15	20
L4	2	2	2	2	2	2
L7	47.5	62	72	87	102	127
L11	27	36	44	55	67	85
L12	19.5	35	40	50	60	75
L13	13	15	15	15	15	20
L14	2	2	2	2	2	2
L15	16	28	32	45	50	70
L16	2	3.5	4	2.5	5	2.5
L17	6	8	8	10	10	10
L18	43	55	60	60	70	90
L19	4.5	4.8	7.2	10	12	12
L20	10	12.5	20	30	40	40
L21	75.5	100	115	130	155	195
L22	95	135	155	180	215	270
L23	40	52	53	70	80	95
L24	30	35	35	50	55	65
B2 h9	5	6	6	10	12	14
B3 P9	5	6	6	10	12	14
H2	15	20.5	24.5	35	43	53.5
H3	15.3	20.8	24.8	35.3	43.3	53.8

Note: The output/input shaft size can be custom designed. Please contact the sales representative.

Spiral Bevel Gear Reducer

RA-CT-S series

Keyless Bushing Output / Solid Shaft Input

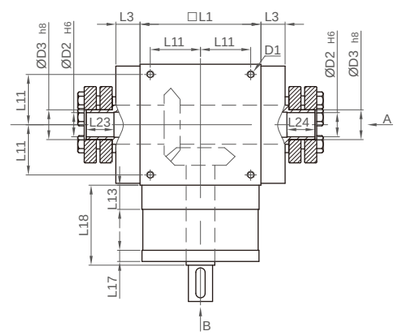

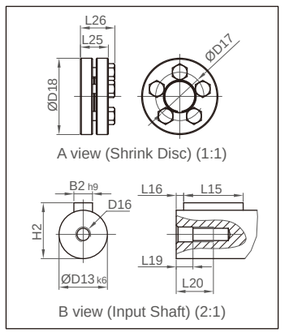

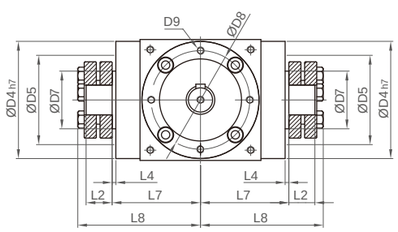

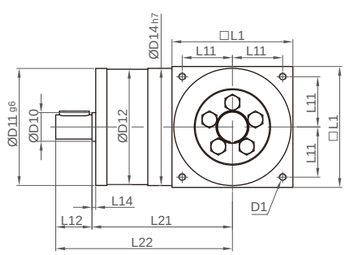

Unit: mm

Size	RA065	RA090	RA110	RA140	RA170	RA210
D1	M4	M6	M8	M10	M12	M16
D2 H6	13	18	22	32	40	50
D3 h8	16	22	25	44	50	62
D4 h7	63	88	108	135	165	205
D5	48	60	90	110	122	130
D7	21	28	33	47	55	75
D8	53	76	95	92	114	142
D9	4 x M4 x L10	4 x M5 x L12.5	6 x M6 x L15	6 x M6 x L15	6 x M8 x L20	6 x M8 x L20
D10	15.4	25.8	35.8	49	59.3	79.3
D11 g6	62.9	87	107	103	127	158
D12	62	86	106	104	128	160
D13 k6	13	18	22	32	40	50
D14 h7	63	88	108	135	165	205
D16	M4	M5	M8	M12	M16	M16
D17	26	36	38	61	70	86
D18	41	50	50	80	90	110
L1	65	90	110	140	170	210
L2	14	18	18	24	26	29
L3	13	15	15	15	15	20
L4	2	2	2	2	2	2
L7	47.5	62	72	87	102	127
L8	66	85	95	116.5	133.5	161.5
L11	27	36	44	55	67	85
L12	19.5	35	40	50	60	75
L13	13	15	15	15	15	20
L14	2	2	2	2	2	2
L15	16	28	32	45	50	70
L16	2	3.5	4	2.5	5	2.5
L17	6	8	8	10	10	10
L18	43	55	60	60	70	90
L19	4.5	4.8	7.2	10	12	12
L20	10	12.5	20	30	40	40
L21	75.5	100	115	130	155	195
L22	95	135	155	180	215	270
L23	15	20	20	26	28	31
L24	15	20	20	26	28	31
L25	15	19.5	19.5	25.5	27.5	30.5
L26	18.5	23	23	29.5	31.5	34.5
B2 h9	5	6	6	10	12	14
H2	15	20.5	24.5	35	43	53.5

Note: The output/input shaft size can be custom designed. Please contact the sales representative.

RA-ST-S0S0 series

Double Solid Shaft Output / Double Solid Shaft Input

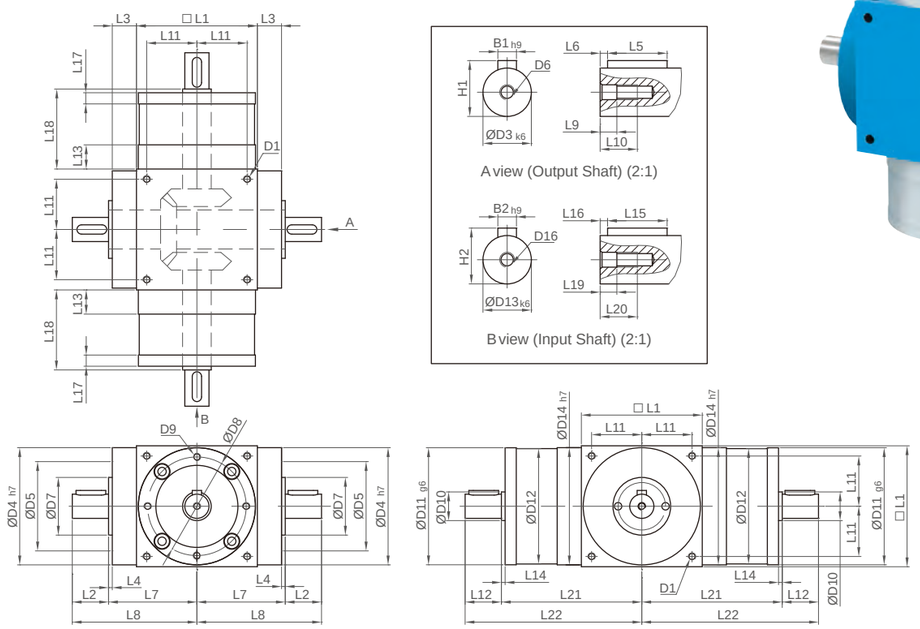

Unit: mm

Size	RA065	RA090	RA110	RA140	RA170	RA210
D1	M4	M6	M8	M10	M12	M16
D3 k6	13	18	22	32	40	50
D4 h7	63	88	108	135	165	205
D5	48	60	90	110	122	130
D6	M4	M5	M8	M12	M16	M16
D7	21	28	33	47	55	75
D8	53	76	95	92	114	142
D9	4 x M4 x L10	4 x M5 x L12.5	6 x M6 x L15	6 x M6 x L15	6 x M8 x L20	6 x M8 x L20
D10	15.4	25.8	35.8	49	59.3	79.3
D11 g6	62.9	87	107	103	127	158
D12	62	86	106	104	128	160
D13 k6	13	18	22	32	40	50
D14 h7	63	88	108	135	165	205
D16	M4	M5	M8	M12	M16	M16
L1	65	90	110	140	170	210
L2	19.5	35	40	50	60	75
L3	13	15	15	15	15	20
L4	2	2	2	2	2	2
L5	16	28	32	45	50	70
L6	2	3.5	4	2.5	5	2.5
L7	47.5	62	72	87	102	127
L8	67	97	112	137	162	202
L9	4.5	4.8	7.2	10	12	12
L10	10	12.5	20	30	40	40
L11	27	36	44	55	67	85
L12	19.5	35	40	50	60	75
L13	13	15	15	15	15	20
L14	2	2	2	2	2	2
L15	16	28	32	45	50	70
L16	2	3.5	4	2.5	5	2.5
L17	6	8	8	10	10	10
L18	43	55	60	60	70	90
L19	4.5	4.8	7.2	10	12	12
L20	10	12.5	20	30	40	40
L21	75.5	100	115	130	155	195
L22	95	135	155	180	215	270
B1 h9	5	6	6	10	12	14
B2 h9	5	6	6	10	12	14
H1	15	20.5	24.5	35	43	53.5
H2	15	20.5	24.5	35	43	53.5

Note: The output/input shaft size can be custom designed. Please contact the sales representative.

RA-SL/SR-S0S0 series

Single Solid Shaft Output / Double Solid Shaft Input

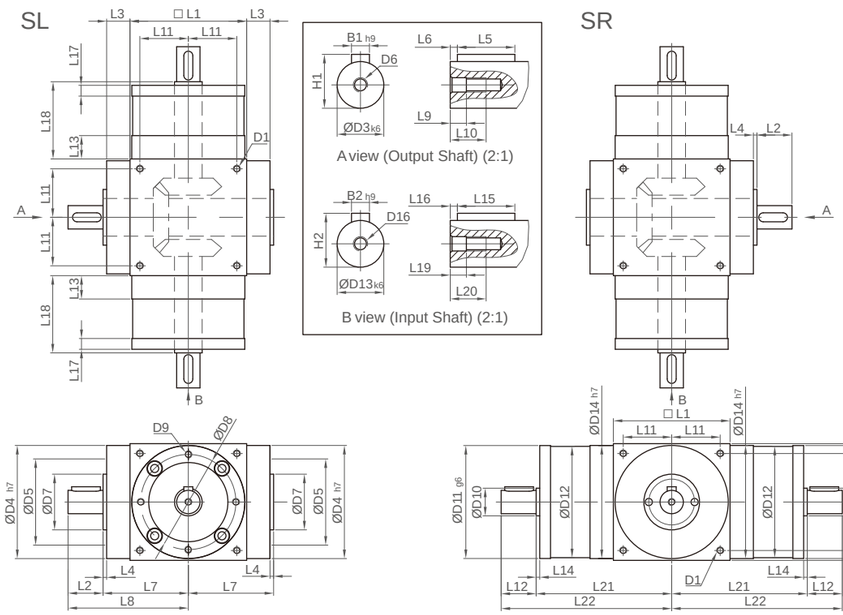

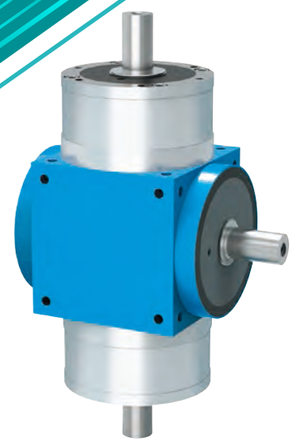

Unit: mm

Size	RA065	RA090	RA110	RA140	RA170	RA210
D1	M4	M6	M8	M10	M12	M16
D3 k6	13	18	22	32	40	50
D4 h7	63	88	108	135	165	205
D5	48	60	90	110	122	130
D6	M4	M5	M8	M12	M16	M16
D7	21	28	33	47	55	75
D8	53	76	95	92	114	142
D9	4 x M4 x L10	4 x M5 x L12.5	6 x M6 x L15	6 x M6 x L15	6 x M8 x L20	6 x M8 x L20
D10	15.4	25.8	35.8	49	59.3	79.3
D11 g6	62.9	87	107	103	127	158
D12	62	86	106	104	128	160
D13 k6	13	18	22	32	40	50
D14 h7	63	88	108	135	165	205
D16	M4	M5	M8	M12	M16	M16
L1	65	90	110	140	170	210
L2	19.5	35	40	50	60	75
L3	13	15	15	15	15	20
L4	2	2	2	2	2	2
L5	16	28	32	45	50	70
L6	2	3.5	4	2.5	5	2.5
L7	47.5	62	72	87	102	127
L8	67	97	112	137	162	202
L9	4.5	4.8	7.2	10	12	12
L10	10	12.5	20	30	40	40
L11	27	36	44	55	67	85
L12	19.5	35	40	50	60	75
L13	13	15	15	15	15	20
L14	2	2	2	2	2	2
L15	16	28	32	45	50	70
L16	2	3.5	4	2.5	5	2.5
L17	6	8	8	10	10	10
L18	43	55	60	60	70	90
L19	4.5	4.8	7.2	10	12	12
L20	10	12.5	20	30	40	40
L21	75.5	100	115	130	155	195
L22	95	135	155	180	215	270
B1 h9	5	6	6	10	12	14
B2 h9	5	6	6	10	12	14
H1	15	20.5	24.5	35	43	53.5
H2	15	20.5	24.5	35	43	53.5

Note: The output/input shaft size can be custom designed. Please contact the sales representative.

Spiral Bevel Gear Reducer

RA-ST-F series

Double Solid Shaft Output / Flange Input

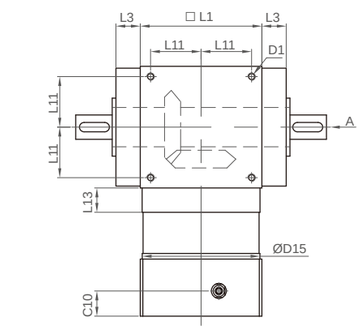

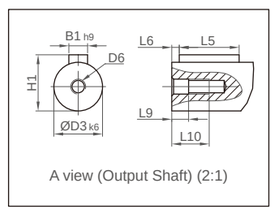

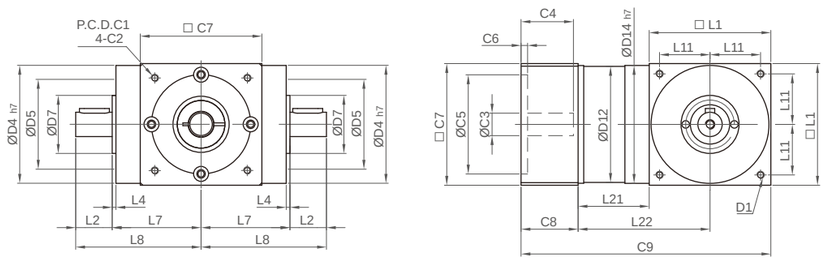

Unit: mm

Size	RA065	RA090	RA110	RA140	RA170	RA210
D1	M4	M6	M8	M10	M12	M16
D3 k6	13	18	22	32	40	50
D4 h7	63	88	108	135	165	205
D5	48	60	90	110	122	130
D6	M4	M5	M8	M12	M16	M16
D7	21	28	33	47	55	75
D12	62	86	106	104	128	160
D14 h7	63	88	108	135	165	205
D15	62.9	87	107	103	127	158
L1	65	90	110	140	170	210
L2	19.5	35	40	50	60	75
L3	13	15	15	15	15	20
L4	2	2	2	2	2	2
L5	16	28	32	45	50	70
L6	2	3.5	4	2.5	5	2.5
L7	47.5	62	72	87	102	127
L8	67	97	112	137	162	202
L9	4.5	4.8	7.2	10	12	12
L10	10	12.5	20	30	40	40
L11	27	36	44	55	67	85
L13	13	15	15	15	15	20
L21	38	49	54	55	63	83
L22	70.5	94	109	125	148	188
C1[1]	70	100	130	130	165	215
C2[1]	M5	M6	M8	M8	M10	M12
C3[1]	≤14	≤24	≤24	≤32	≤38	≤55
C4[1]	≤34	≤40	≤46	≤53	≤66	≤82.5
C5[1]	50	80	80	110	130	180
C6[1]	8	6	10	10	10	11
C7[1]	65	90	110	115	142	190
C8[1]	30.5	31	32.5	50	54.5	76
C9[1]	133.5	170	196.5	245	287.5	369
C10[1]	14.5	17	19	19	23	24
B1 h9	5	6	6	10	12	14
H1	15	20.5	24.5	35	43	53.5

Note 1: The motor size can be modified according to customer needs.
Note 2: The output/input shaft size can be custom designed. Please contact the sales representative.

Spiral Bevel Gear Reducer

RA-SL/SR-F series

Single Solid Shaft Output / Flange Input

SL

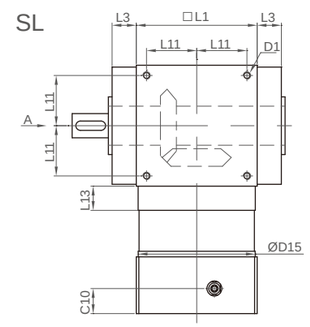

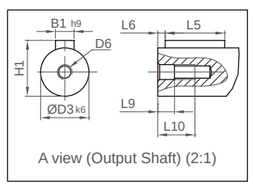

SR

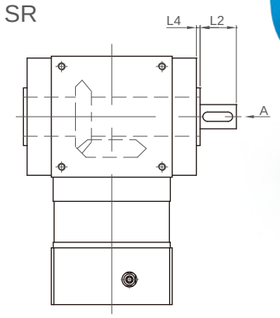

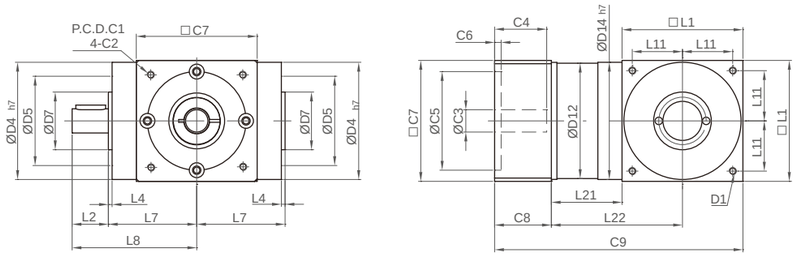

Unit: mm

Size	RA065	RA090	RA110	RA140	RA170	RA210
D1	M4	M6	M8	M10	M12	M16
D3 k6	13	18	22	32	40	50
D4 h7	63	88	108	135	165	205
D5	48	60	90	110	122	130
D6	M4	M5	M8	M12	M16	M16
D7	21	28	33	47	55	75
D12	62	86	106	104	128	160
D14 h7	63	88	108	135	165	205
D15	62.9	87	107	103	127	158
L1	65	90	110	140	170	210
L2	19.5	35	40	50	60	75
L3	13	15	15	15	15	20
L4	2	2	2	2	2	2
L5	16	28	32	45	50	70
L6	2	3.5	4	2.5	5	2.5
L7	47.5	62	72	87	102	127
L8	67	97	112	137	162	202
L9	4.5	4.8	7.2	10	12	12
L10	10	12.5	20	30	40	40
L11	27	36	44	55	67	85
L13	13	15	15	15	15	20
L21	38	49	54	55	63	83
L22	70.5	94	109	125	148	188
C1[1]	70	100	130	130	165	215
C2[1]	M5	M6	M8	M8	M10	M12
C3[1]	≤14	≤24	≤24	≤32	≤38	≤55
C4[1]	≤34	≤40	≤46	≤53	≤66	≤82.5
C5[1]	50	80	80	110	130	180
C6[1]	8	6	10	10	10	11
C7[1]	65	90	110	115	142	190
C8[1]	30.5	31	32.5	50	54.5	76
C9[1]	133.5	170	196.5	245	287.5	369
C10[1]	14.5	17	19	19	23	24
B1 h9	5	6	6	10	12	14
H1	15	20.5	24.5	35	43	53.5

Note 1: The motor size can be modified according to customer needs.
Note 2: The output/input shaft size can be custom designed. Please contact the sales representative.

Spiral Bevel Gear Reducer

RA-HT-F series

Hollow Shaft Output with Key / Flange Input

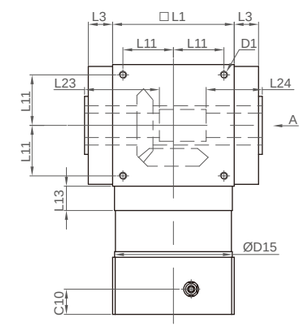

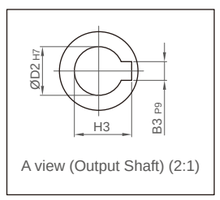

A view (Output Shaft) (2:1)

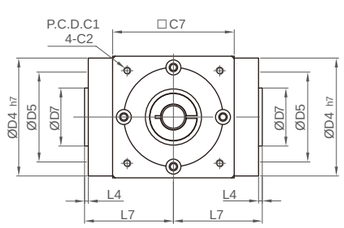

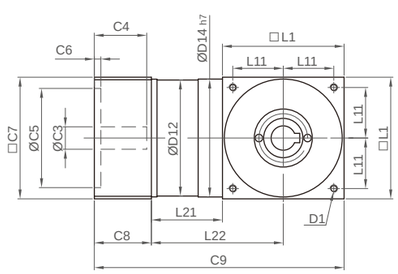

Unit: mm

Size	RA065	RA090	RA110	RA140	RA170	RA210
D1	M4	M6	M8	M10	M12	M16
D2 H7	13	18	22	32	40	50
D4 h7	63	88	108	135	165	205
D5	48	60	90	110	122	130
D7	21	28	33	47	55	75
D12	62	86	106	104	128	160
D14 h7	63	88	108	135	165	205
D15	62.9	87	107	103	127	158
L1	65	90	110	140	170	210
L3	13	15	15	15	15	20
L4	2	2	2	2	2	2
L7	47.5	62	72	87	102	127
L11	27	36	44	55	67	85
L13	13	15	15	15	15	20
L21	38	49	54	55	63	83
L22	70.5	94	109	125	148	188
L23	40	52	53	70	80	95
L24	30	35	35	50	55	65
C1[1]	70	100	130	130	165	215
C2[1]	M5	M6	M8	M8	M10	M12
C3[1]	≤14	≤24	≤24	≤32	≤38	≤55
C4[1]	≤34	≤40	≤46	≤53	≤66	≤82.5
C5[1]	50	80	80	110	130	180
C6[1]	8	6	10	10	10	11
C7[1]	65	90	110	115	142	190
C8[1]	30.5	31	32.5	50	54.5	76
C9[1]	133.5	170	196.5	245	287.5	369
C10[1]	14.5	17	19	19	23	24
B3 P9	5	6	6	10	12	14
H3	15.3	20.8	24.8	35.3	43.3	53.8

Note 1: The motor size can be modified according to customer needs.
Note 2: The output shaft size can be custom designed. Please contact the sales representative.

Spiral Bevel Gear Reducer

RA-CT-F series

Keyless Bushing Output / Flange Input

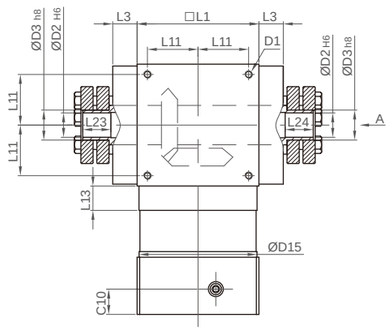

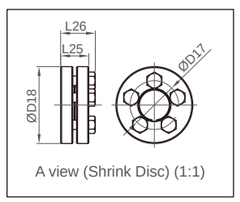

A view (Shrink Disc) (1:1)

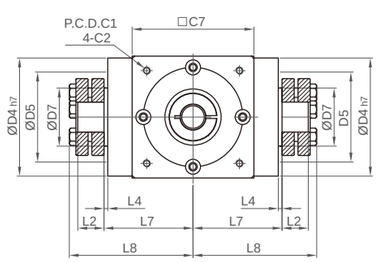

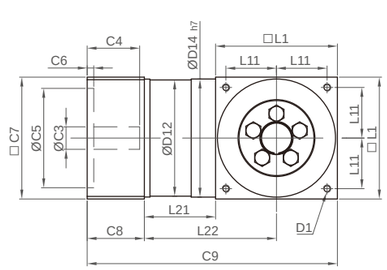

Unit: mm

Size	RA065	RA090	RA110	RA140	RA170	RA210
D1	M4	M6	M8	M10	M12	M16
D2 H6	13	18	22	32	40	50
D3 h8	16	22	25	44	50	62
D4 h7	63	88	108	135	165	205
D5	48	60	90	110	122	130
D7	21	28	33	47	55	75
D12	62	86	106	104	128	160
D14 h7	63	88	108	135	165	205
D15	62.9	87	107	103	127	158
D17	26	36	38	61	70	86
D18	41	50	50	80	90	110
L1	65	90	110	140	170	210
L2	14	18	18	24	26	29
L3	13	15	15	15	15	20
L4	2	2	2	2	2	2
L7	47.5	62	72	87	102	127
L8	66	85	95	116.5	133.5	161.5
L11	27	36	44	55	67	85
L13	13	15	15	15	15	20
L21	38	49	54	55	63	83
L22	70.5	94	109	125	148	188
L23	15	20	20	26	28	31
L24	15	20	20	26	28	31
L25	15	19.5	19.5	25.5	27.5	30.5
L26	18.5	23	23	29.5	31.5	34.5
C1[1]	70	100	130	130	165	215
C2[1]	M5	M6	M8	M8	M10	M12
C3[1]	≤14	≤24	≤24	≤32	≤38	≤55
C4[1]	≤34	≤40	≤46	≤53	≤66	≤82.5
C5[1]	50	80	80	110	130	180
C6[1]	8	6	10	10	10	11
C7[1]	65	90	110	115	142	190
C8[1]	30.5	31	32.5	50	54.5	76
C9[1]	133.5	170	196.5	245	287.5	369
C10[1]	14.5	17	19	19	23	24

Note 1: The motor size can be modified according to customer needs.
Note 2: The output shaft size can be custom designed. Please contact the sales representative.

Spiral Bevel Gear Reducer

RA-ST-G series

Double Solid Shaft Output / Reducer Input

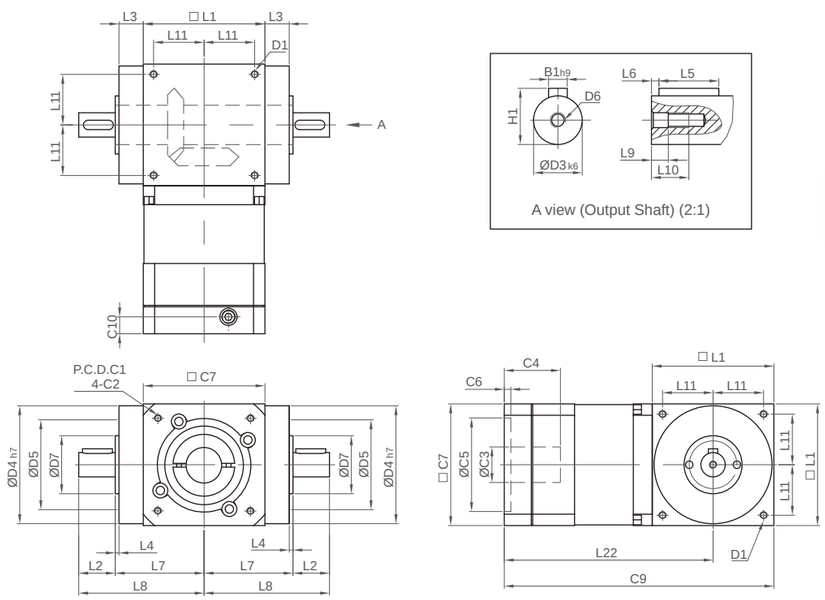

Unit: mm

Size	RA065	RA090	RA110	RA140	RA170	RA210
D1	M4	M6	M8	M10	M12	M16
D3 k6	13	18	22	32	40	50
D4 h7	63	88	108	135	165	205
D5	48	60	90	110	122	130
D6	M4	M5	M8	M12	M16	M16
D7	21	28	33	47	55	75
L1	65	90	110	140	170	210
L2	19.5	35	40	50	60	75
L3	13	15	15	15	15	20
L4	2	2	2	2	2	2
L5	16	28	32	45	50	70
L6	2	3.5	4	2.5	5	2.5
L7	47.5	62	72	87	102	127
L8	67	97	112	137	162	202
L9	4.5	4.8	7.2	10	12	12
L10	10	12.5	20	30	40	40
L11	27	36	44	55	67	85
L22	131.5	165.5	176.5	191.5	233.5	283.5
C1[1]	70	100	100	100	130	165
C2[1]	M5	M6	M6	M6	M8	M10
C3[1]	≤19	≤24	≤24	≤24	≤32	≤38
C4[1]	≤33.5	≤46	≤46	≤46	≤53	≤66
C5[1]	50	80	80	80	110	130
C6[1]	6	10	10	10	10	10
C7[1]	60	90	90	90	115	142
C9[1]	164	210.5	231.5	261.5	318.5	388.5
C10[1]	13	18	18	18	18	22.5
B1 h9	5	6	6	10	12	14
H1	15	20.5	24.5	35	43	53.5

Note 1: The motor size can be modified according to customer needs.
Note 2: The output shaft size can be custom designed. Please contact the sales representative.

Spiral Bevel Gear Reducer

RA-SL/SR-G series

Single Solid Shaft Output / Reducer Input

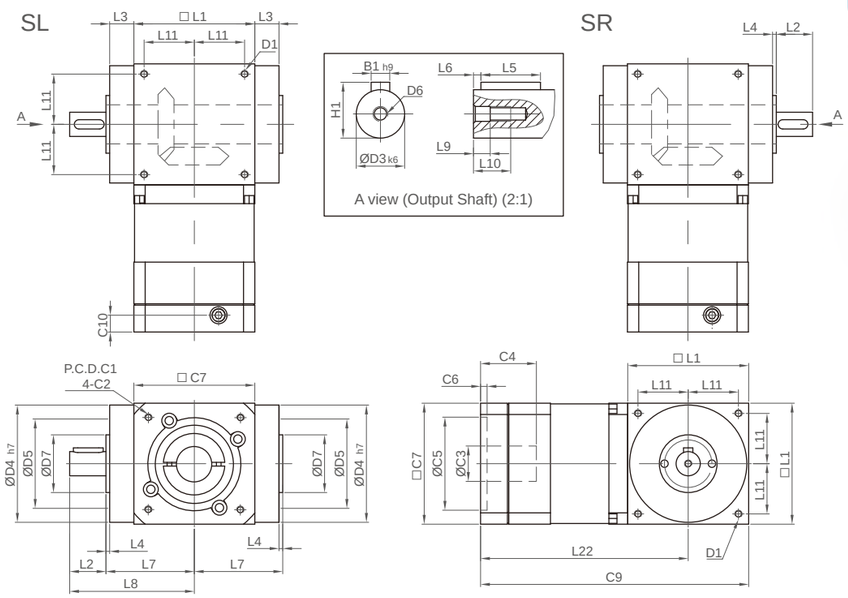

Unit: mm

Size	RA065	RA090	RA110	RA140	RA170	RA210
D1	M4	M6	M8	M10	M12	M16
D3 k6	13	18	22	32	40	50
D4 h7	63	88	108	135	165	205
D5	48	60	90	110	122	130
D6	M4	M5	M8	M12	M16	M16
D7	21	28	33	47	55	75
L1	65	90	110	140	170	210
L2	19.5	35	40	50	60	75
L3	13	15	15	15	15	20
L4	2	2	2	2	2	2
L5	16	28	32	45	50	70
L6	2	3.5	4	2.5	5	2.5
L7	47.5	62	72	87	102	127
L8	67	97	112	137	162	202
L9	4.5	4.8	7.2	10	12	12
L10	10	12.5	20	30	40	40
L11	27	36	44	55	67	85
L22	131.5	160	171	186	231	278
C1[1]	70	100	100	100	130	165
C2[1]	M5	M6	M6	M6	M8	M10
C3[1]	≤19	≤24	≤24	≤24	≤32	≤38
C4[1]	≤33.5	≤40	≤40	≤40	≤50	≤60
C5[1]	50	80	80	80	110	130
C6[1]	6	4	4	4	5	6
C7[1]	60	90	90	90	115	142
C9[1]	164	205	226	256	316	383
C10[1]	13`	12.5	12.5	12.5	14.5	18
B1 h9	5	6	6	10	12	14
H1	15	20.5	24.5	35	43	53.5

Note 1: The motor size can be modified according to customer needs.
Note 2: The output shaft size can be custom designed. Please contact the sales representative.

Spiral Bevel Gear Reducer

RA-HT-G series

Hollow Shaft Output with Key / Reducer Input

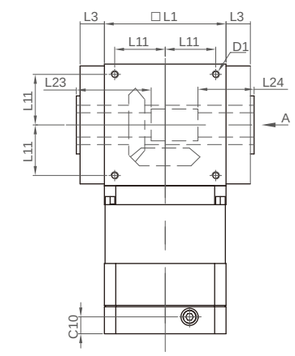

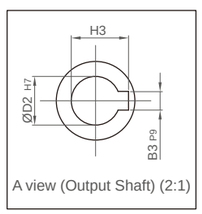

A view (Output Shaft) (2:1)

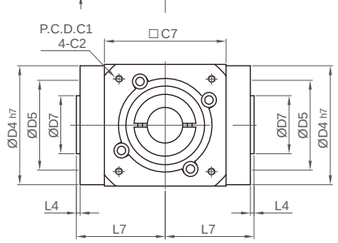

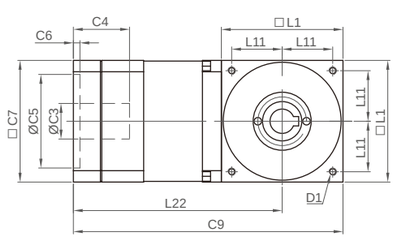

Unit: mm

Size	RA065	RA090	RA110	RA140	RA170	RA210
D1	M4	M6	M8	M10	M12	M16
D2 H7	13	18	22	32	40	50
D4 h7	63	88	108	135	165	205
D5	48	60	90	110	122	130
D7	21	28	33	47	55	75
L1	65	90	110	140	170	210
L3	13	15	15	15	15	20
L4	2	2	2	2	2	2
L7	47.5	62	72	87	102	127
L11	27	36	44	55	67	85
L22	131.5	165.5	176.5	191.5	233.5	283.5
L23	40	52	53	70	80	95
L24	30	35	35	50	55	65
C1[1]	70	100	100	100	130	165
C2[1]	M5	M6	M6	M6	M8	M10
C3[1]	≤19	≤24	≤24	≤24	≤32	≤38
C4[1]	≤33.5	≤46	≤46	≤46	≤53	≤66
C5[1]	50	80	80	80	110	130
C6[1]	6	10	10	10	10	10
C7[1]	60	90	90	90	115	142
C9[1]	164	210.5	231.5	261.5	318.5	388.5
C10[1]	13	18	18	18	18	22.5
B3 P9	5	6	6	10	12	14
H3	15.3	20.8	24.8	35.3	43.3	53.8

Note 1: The motor size can be modified according to customer needs.
Note 2: The output shaft size can be custom designed. Please contact the sales representative.

Spiral Bevel Gear Reducer

RA-CT-G series

Keyless Bushing Output / Reducer Input

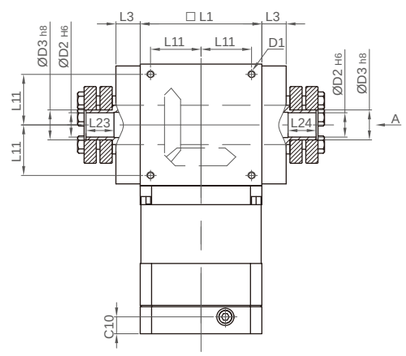

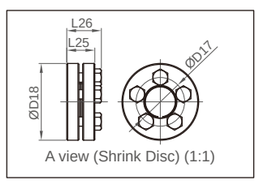

A view (Shrink Disc) (1:1)

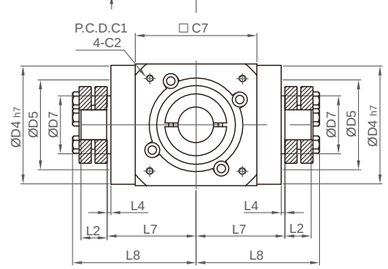

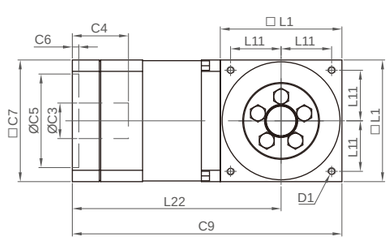

Unit: mm

Size	RA065	RA090	RA110	RA140	RA170	RA210
D1	M4	M6	M8	M10	M12	M16
D2 H6	13	18	22	32	40	50
D3 h8	16	22	25	44	50	62
D4 h7	63	88	108	135	165	205
D5	48	60	90	110	122	130
D7	21	28	33	47	55	75
D17	26	36	38	61	70	86
D18	41	50	50	80	90	110
L1	65	90	110	140	170	210
L2	14	18	18	24	26	29
L3	13	15	15	15	15	20
L4	2	2	2	2	2	2
L7	47.5	62	72	87	102	127
L8	66	85	95	116.5	133.5	161.5
L11	27	36	44	55	67	85
L22	131.5	165.5	176.5	191.5	233.5	283.5
L23	15	20	20	26	28	31
L24	15	20	20	26	28	31
L25	15	19.5	19.5	25.5	27.5	30.5
L26	18.5	23	23	29.5	31.5	34.5
C1[1]	70	100	100	100	130	165
C2[1]	M5	M6	M6	M6	M8	M10
C3[1]	≤19	≤24	≤24	≤24	≤32	≤38
C4[1]	≤33.5	≤46	≤46	≤46	≤53	≤66
C5[1]	50	80	80	80	110	130
C6[1]	6	10	10	10	10	10
C7[1]	60	90	90	90	115	142
C9[1]	164	210.5	231.5	261.5	318.5	388.5
C10[1]	13	18	18	18	18	22.5

Note 1: The motor size can be modified according to customer needs.
Note 2: The output shaft size can be custom designed. Please contact the sales representative.

Spiral Bevel Gear Reducer
(**RAM/RAH** series)

▶ Product Features

- Aluminum alloy material can improve heat dissipation capacity and slow down temperature rise
- Good reciprocating positioning accuracy
- Customized input end, able to work with various motors
- The oil seal adopts a special design, no maintenance or replacement of lubricating oil is required under normal use
- Diversified output shafts can meet the needs in various situations
- Output torque is higher than that of general products

▶ Model Description

RAM	090	Li	10	H	D1-D2-D3-D4 (L1/L2)
Model	Frame Size	Stage	Ratio	Output Shaft Style	Motor Dimensions
RAM RAH	60 / 150 90 / 180 120 / 220	L1: One-stage L2: Two-stage L3: Three-stage		H: Hollow shaft S: Single solid shaft 2S: Double solid shaft D: Clamp-on F: Flange output shaft	

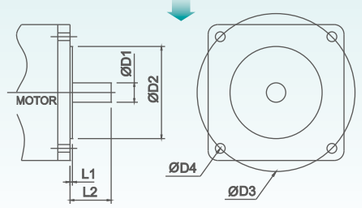

▶ **RAM/RAH** Modularized Bevel Gearhead

Pinhong Spiral Bevel Gear Reducer has diversified output forms of steering heads. There are also pure steering gears available to customers who already have reducers to increase the width of application for the the original products and reduce inventory.

H	S	2S	D	F
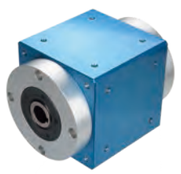	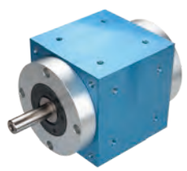	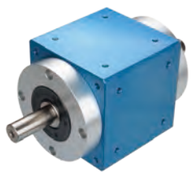	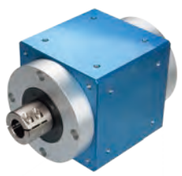	
Hollow shaft	Single solid shaft	Double solid shaft	Clamp-on	Flange type

RAM series
Summary Table

RAM-H series

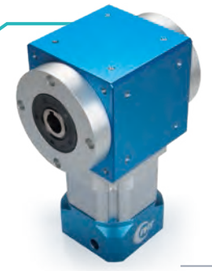

- Grade: Standard accuracy
- Features: Standard type, hollow shaft
- Backlash: 10 ~ 12 arc min
- Size: 60, 90, 120, 150, 180, 220
- Noise: 76 ~ 80 dB
- Life: 30,000 hrs.

RAM-S series

- Grade: Standard accuracy
- Features: Standard type, single solid shaft
- Backlash: 10 ~ 12 arc min
- Size: 60, 90, 120, 150, 180, 220
- Noise: 76 ~ 80 dB
- Life: 30,000 hrs.

RAM-2S series

- Grade: Standard accuracy
- Features: Standard type, dual solid shaft
- Backlash: 10 ~ 12 arc min
- Size: 60, 90, 120, 150
- Noise: 76 ~ 80 dB
- Life: 30,000 hrs.

RAM-D series

- Grade: Standard accuracy
- Features: Standard type, clamp-on
- Backlash: 10 ~ 12 arc min
- Size: 60, 90, 120, 150, 180, 220
- Noise: 76 ~ 80 dB
- Life: 30,000 hrs.

RAM-F series

- Grade: Standard accuracy
- Features: Standard type, flange output shaft
- Backlash: 10 ~ 12 arc min
- Size: 60, 90, 120, 150, 180, 220
- Noise: 76 ~ 80 dB
- Life: 30,000 hrs.

RAH series
Summary Table

RAH-H series

- Grade: General accuracy
- Features: General purpose type, hollow shaft
- Backlash: 13 ~ 15 arc min
- Size: 60, 90, 120, 150
- Noise: 76 ~ 80 dB
- Life: 30,000 hrs.

RAH-S series

- Grade: General accuracy
- Features: General purpose type, single solid shaft
- Backlash: 13 ~ 15 arc min
- Size: 60, 90, 120, 150
- Noise: 76 ~ 80 dB
- Life: 30,000 hrs.

RAH-2S series

- Grade: General accuracy
- Features: General purpose type, dual solid shaft
- Backlash: 13 ~ 15 arc min
- Size: 60, 90, 120, 150
- Noise: 76 ~ 80 dB
- Life: 30,000 hrs.

RAH-D series

- Grade: General accuracy
- Features: General purpose type, clamp-on
- Backlash: 13 ~ 15 arc min
- Size: 60, 90, 120, 150
- Noise: 76 ~ 80 dB
- Life: 30,000 hrs.

RAH-F series

- Grade: General accuracy
- Features: General purpose type, flange output shaft
- Backlash: 13 ~ 15 arc min
- Size: 60, 90, 120, 150
- Noise: 76 ~ 80 dB
- Life: 30,000 hrs.

Spiral Bevel Gear Reducer

RAM series
10 ~ 12 ARC MIN / Technical Information

Specification	Stage	Ratio	RAM060	RAM090	RAM120	RAM150	RAM180	RAM220
Rated output torque (Nm)	1	3	44	168	260	500	880	1390
		4	64	188	265	510	880	1390
		5	60	180	265	510	880	1390
		7	55	176	265	510	880	1390
		10	44	168	260	500	880	1390
	2	9	44	168	260	500	880	1390
		12	44	168	260	500	880	1390
		15	44	168	260	500	880	1390
		16	64	188	265	510	880	1390
		20	64	188	265	510	880	1390
		21	44	168	260	500	880	1390
		25	60	180	265	510	880	1390
		28	55	176	265	510	880	1390
		30	44	168	260	500	880	1390
		35	55	176	265	510	880	1390
		40	64	188	265	510	880	1390
		49	55	176	265	510	880	1390
		50	60	180	265	510	880	1390
		70	55	176	265	510	880	1390
	3	100	60	180	265	510	880	1390
Instant maximum output torque (Nm)	1, 2, 3	3~100	3 times rated output torque					
Backlash (arc min)	1	3~10	≤10	≤10	≤10	≤10	≤10	≤10
	2	9~70	≤12	≤12	≤12	≤12	≤12	≤12
Maximum input speed (RPM)	1	3~10	7500	5500	4500	3500	3000	2200
	2	9~70	8000	6000	6000	6000	6000	4800
Use efficiency at full load (%)	1	3~10	≥94					
	2	9~70	≥92					
Noise value (dB)[A]	1, 2, 3	3~100	76	77	77	78	79	80
Service life (hrs)[B]			30000					
Operating temperature range (℃)			-15°C~+90°C					
Protection level			IP64					
Lubricating oil			Synthetic lubricating oil					

A. The smaller the reduction ratio or the higher the speed, the greater the noise value. (1500RPM, no load, reduction ratio=5)

B. The service life of continuous operation is 15,000 hours.

Note：Ratio100 uses three-stage (L3) style, and the strength is stronger than that at two-stage (L2).

Spiral Bevel
Gear Reducer

RAM series

10 ~ 12 ARC MIN / Technical Information

Specification		Stage	Ratio	RAM060	RAM090	RAM120	RAM150	RAM180	RAM220
Allowable radial force (N)		1, 2, 3	3~100	1600	2700	3100	4800	7000	13000
Allowable axial force (N)				800	1350	1550	2400	3500	6500
Weight (kg)	RAM - H	One-stage		3.5	9.5	13.2	28.4	50.4	51.7
		Two-stage		3.8	10.5	15.2	33.4	65.4	66.7
	RAM - S	One-stage		3.7	10.0	14.3	31.1	55.4	97.4
		Two-stage		4.0	11.0	16.4	36.4	70.4	113.4
	RAM - 2S	One-stage		3.9	10.2	14.6	32.4	-	-
		Two-stage		4.2	11.2	16.7	36.9	-	-
	RAM - D	One-stage		3.6	9.4	13.2	28.5	51.7	83.5
		Two-stage		3.9	10.4	15.3	33.5	66.7	99.5
	RAM - F	One-stage		3.7	9.9	13.5	29.4	51.0	85.8
		Two-stage		4.0	10.9	15.6	34.4	66.0	101.5
Moment of inertia (kg X cm²)		1	3	0.372	2.31	4.74	20.85	62.9	163.2
			4	0.229	1.44	2.98	12.83	38.9	100.3
			5	0.168	1.10	2.29	9.46	28.9	73.9
			7	0.123	0.86	1.80	7.86	24.4	61.4
			10	0.093	0.71	1.49	6.69	21.0	52.5
		2	9	0.175	1.28	2.85	14.59	46.2	114.4
			12	0.160	1.19	2.69	14.23	45.2	111.1
			15	0.150	1.15	2.58	14.03	44.7	110.1
			16	0.109	0.82	1.82	8.83	28.1	69.4
			20	0.091	0.71	1.55	7.81	24.9	61.1
			21	0.309	1.92	3.94	17.30	52.2	135.4
			25	0.089	0.70	1.52	6.78	21.7	52.8
			28	0.084	0.67	1.42	6.47	20.6	50.0
			30	0.075	0.60	1.31	6.11	19.5	47.2
			35	0.082	0.65	1.39	6.38	20.4	49.5
			40	0.075	0.61	1.31	6.11	19.5	47.4
			49	0.082	0.65	1.39	6.38	20.4	49.5
			50	0.074	0.61	1.30	5.91	18.9	45.7
			70	0.073	0.59	1.27	5.84	18.7	45.3
		3	100	0.086	0.69	1.49	6.69	21.4	52.0

Spiral Bevel
Gear Reducer

RAM-H series

Standard Type / Hollow Shaft

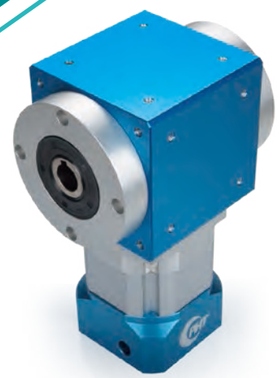

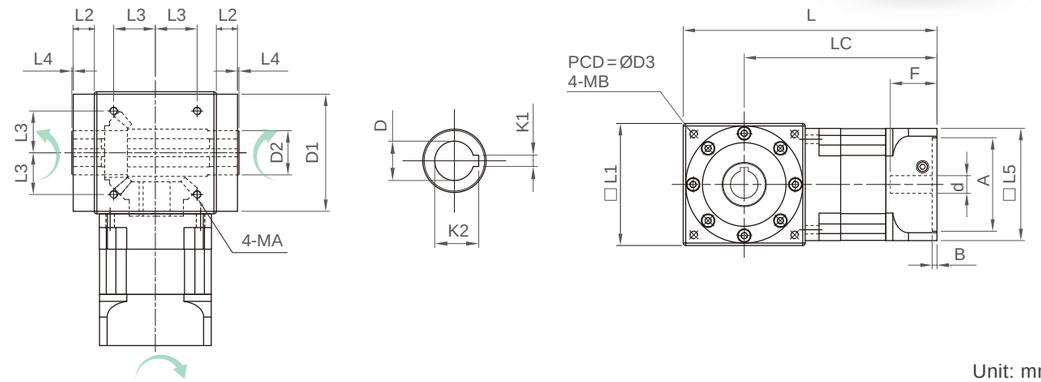

Unit: mm

Size		RAM060-H	RAM090-H	RAM120-H	RAM150-H	RAM180-H	RAM220-H
L1		83	114	124	154	183	220
L2		17	21.5	21.5	19	20	20
L3		28.284	33.587	38.89	45.962	56.569	72.478
MA		M5 x P0.8 x 10	M6 x P1.0 x 12	M8 x P1.25 x 12	M10 x P1.5 x 15	M12 x P1.75 x 18	M16 x P2.0 x 24
L4		1.5	1.5	1.5	1.5	1.5	1.5
L5		60	94	114	142	180	220
LC	One-stage	146.2	187	196.8	282	327	340
	Two-stage	168.2	215.5	224.8	334	409.5	446.5
L	One-stage	187.7	244	258.8	359	418.5	450
	Two-stage	209.7	272.5	286.8	411	501	556.5
D		16	20	28	40	50	75
D1		79	109	119	149	169	217
D2		25	35	45	55	65	105
D3		100	130	145	190	185	240
MB		M5 x P0.8 x 10	M6 x P1.0 x1 2	M8 x P1.25 x 12	M10 x P1.5 x 15	M12 x P1.75 x 18	M16 x P2.0 x 24
K1		5	6	8	12	14	20
K2		18.3	22.8	31.3	43.3	53.8	79.9
d		≤14	≤24	≤28	≤42	≤55	≤65
△ A		30~50	50~80	50~110	95~130	95~150	110~200
B		6	6	5	10	11	12
△ F		≤35	≤47.5	≤47.5	≤66.5	≤82.5	≤88.5

△：The special size indicated by this symbol varies according to customer needs and servo motors.

Note 1：The reverse output direction can be custom designed.
Note 2：Three-stage is not in this table, please contact our sales if it is needed.

Spiral Bevel
Gear Reducer

RAM-S series

Standard Type / Single Solid Shaft

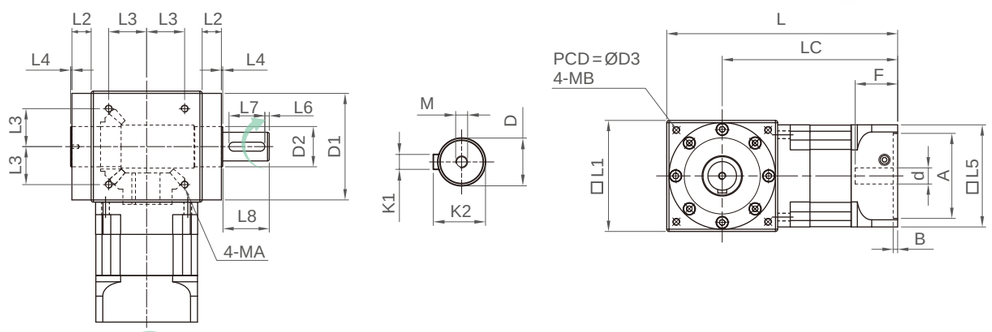

Unit: mm

Size		RAM060-S	RAM090-S	RAM120-S	RAM150-S	RAM180-S	RAM220-S
L1		83	114	124	154	183	220
L2		17	21.5	21.5	19	20	20
L3		28.284	33.587	38.89	45.962	56.569	72.478
MA		M5 x P0.8 x 10	M6 x P1.0 x 12	M8 x P1.25 x 12	M10 x P1.5 x 15	M12 x P1.75 x 18	M16 x P2.0 x 24
L4		1.5	1.5	1.5	1.5	1.5	1.5
L5		60	94	114	142	180	220
L6		3	5	5	5	6	7
L7		20	25	40	45	70	90
L8		27	49	52	67	96	106
LC	One-stage	146.2	187	196.8	282	327	340
	Two-stage	168.2	215.5	224.8	334	409.5	446.5
L	One-stage	187.7	244	258.8	359	418.5	450
	Two-stage	209.7	272.5	286.8	411	501	556.5
※ D		16	20	32	42	55	75
D1		79	109	119	149	169	217
D2		25	35	45	55	65	105
D3		100	130	145	190	185	240
MB		M5 x P0.8 x 10	M6 x P1.0 x 12	M8 x P1.25 x 12	M10 x P1.5 x 15	M12 x P1.75 x 18	M16 x P2.0 x 24
M		M4 x P0.7 x 10	M6 x P1.0 x 15	M8 x P1.25 x 20	M12 x P1.75 x 30	M14 x P2.0 x 35	M14 x P2.0 x 35
K1		5	6	10	12	14	20
K2		18	22.5	35	45	58.5	79.5
d		≤14	≤24	≤28	≤42	≤55	≤65
△ A		30~50	50~80	50~110	95~130	95~150	110~200
B		6	6	5	10	11	12
△ F		≤35	≤47.5	≤47.5	≤66.5	≤82.5	≤88.5

※ : The reducer output shaft can be customized in size and length for customers.

△ : The special size indicated by this symbol varies according to customer needs and servo motors.

Note 1 : The reverse output direction can be custom designed.

Note 2 : Three-stage is not in this table, please contact our sales if it is needed.

Spiral Bevel
Gear Reducer

RAM-2S series

Standard Type / Double Solid Shaft

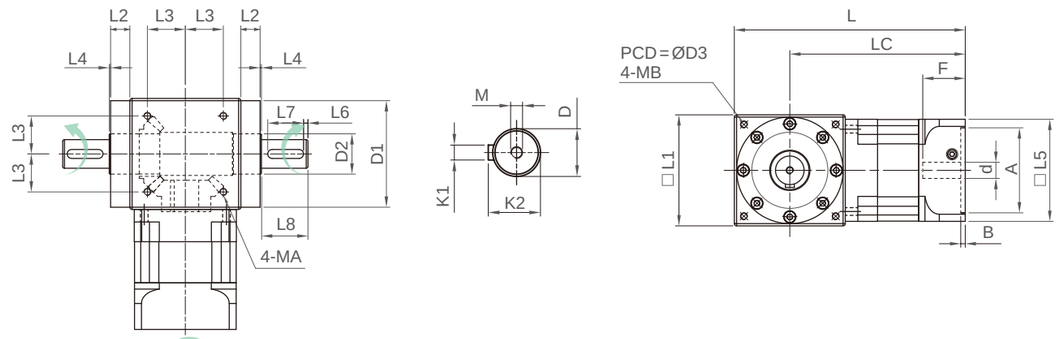

Unit: mm

Size		RAM060-2S	RAM090-2S	RAM120-2S	RAM150-2S
L1		83	114	124	154
L2		17	21.5	21.5	19
L3		28.284	33.587	38.89	45.962
MA		M5 x P0.8 x 10	M6 x P1.0 x 12	M8 x P1.25 x 12	M10 x P1.5 x 15
L4		1.5	1.5	1.5	1.5
L5		60	94	114	142
L6		3	5	5	5
L7		20	25	40	45
L8		27	49	52	67
LC	One-stage	146.2	187	196.8	282
	Two-stage	168.2	215.5	224.8	334
L	One-stage	187.7	244	258.8	359
	Two-stage	209.7	272.5	286.8	411
※ D		16	20	32	42
D1		79	109	119	149
D2		25	35	45	55
D3		100	130	145	190
MB		M5 x P0.8 x 10	M6 x P1.0 x 12	M8 x P1.25 x 12	M10 x P1.5 x 15
M		M4 x P0.7 x 10	M6 x P1.0 x 15	M8 x P1.25 x 20	M12 x P1.75 x 30
K1		5	6	10	12
K2		18	22.5	35	45
d		≤14	≤24	≤28	≤42
△ A		30~50	50~80	50~110	95~130
B		6	6	5	10
△ F		≤35	≤47.5	≤47.5	≤66.5

※ : The reducer output shaft can be customized in size and length for customers.

△ : The special size indicated by this symbol varies according to customer needs and servo motors.

Note 1 : The reverse output direction can be custom designed. (If there is no special notice, make it in the same direction.)

Note 2 : Three-stage is not in this table, please contact our sales if it is needed.

Spiral Bevel
Gear Reducer

RAM-D series

Standard Type / Clamp-on

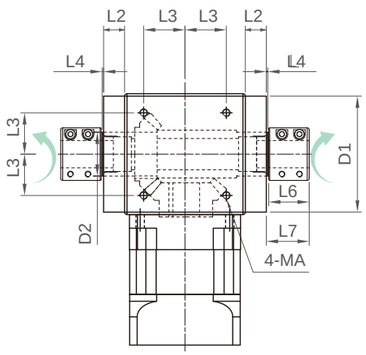

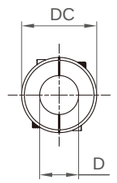

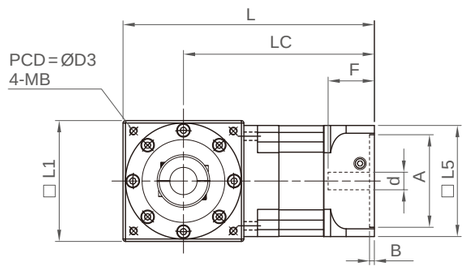

Unit: mm

Size		RAM060-D	RAM090-D	RAM120-D	RAM150-D	RAM180-D	RAM220-D
L1		83	114	124	154	183	220
L2		17	21.5	21.5	19	20	20
L3		28.284	33.587	38.89	45.962	56.569	72.478
MA		M5 x P0.8 x 10	M6 x P1.0 x 12	M8 x P1.25 x 12	M10 x P1.5 x 15	M12 x P1.75 x 18	M16 x P2.0 x 24
L4		1.5	1.5	1.5	1.5	1.5	1.5
L5		60	94	114	142	180	220
L6		33.5	33.5	42.5	42.5	57.5	57.5
L7		35	35	44	44	59	59
LC	One-stage	146.2	187	196.8	282	327	340
	Two-stage	168.2	215.5	224.8	334	409.5	446.5
L	One-stage	187.7	244	258.8	359	418.5	450
	Two-stage	209.7	272.5	286.8	411	501	556.5
DC		30	36	54	66	82	120
※ D		16	20	28	40	50	75
D1		79	109	119	149	169	217
D2		25	35	45	55	65	105
D3		100	130	145	190	185	240
MB		M5 x P0.8 x 10	M6 x P1.0 x 12	M8 x P1.25 x 12	M10 x P1.5 x 15	M12 x P1.75 x 18	M16 x P2.0 x 24
d		≤14	≤24	≤28	≤42	≤55	≤65
△ A		30~50	50~80	50~110	95~130	95~150	110~200
B		6	6	5	10	11	12
△ F		≤35	≤47.5	≤47.5	≤66.5	≤82.5	≤88.5

※ : The reducer output shaft can be customized in size and length for customers.

△ : The special size indicated by this symbol varies according to customer needs and servo motors.

Note 1 : The reverse output direction can be custom designed.

Note 2 : Three-stage is not in this table, please contact our sales if it is needed.

Spiral Bevel
Gear Reducer

RAM-F series

Standard Type / Flange Output Shaft

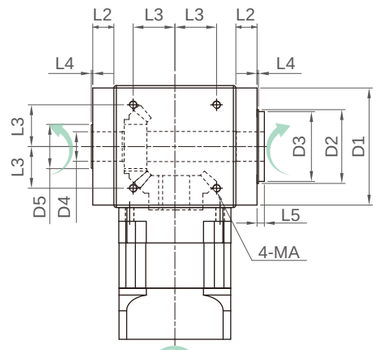

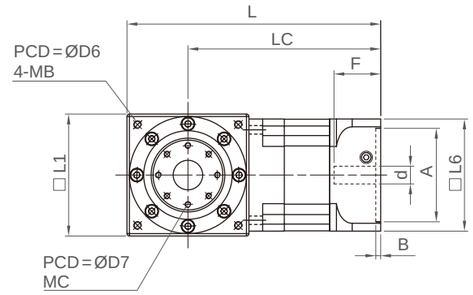

Unit: mm

Size		RAM060-F	RAM090-F	RAM120-F	RAM150-F	RAM180-F	RAM220-F
L1		83	114	124	154	183	220
L2		17	21.5	21.5	19	20	20
L3		28.284	33.587	38.89	45.962	56.569	72.478
MA		M5xP0.8x10	M6xP1.0x12	M8xP1.25x12	M10xP1.5x15	M12xP1.75x18	M16xP2.0x24
L4		1.5	1.5	1.5	1.5	1.5	1.5
L5		7.5	7.5	7.5	7.5	7.5	7.5
L6		60	94	114	142	180	220
LC	One-stage	146.2	187	196.8	282	327	340
	Two-stage	168.2	215.5	224.8	334	409.5	446.5
L	One-stage	187.7	244	258.8	359	418.5	450
	Two-stage	209.7	272.5	286.8	411	501	556.5
D1		79	109	119	149	169	217
D2		45	60	75	80	90	125
D3		44	59	71	79	89	124
D4		15	20	30	35	50	75
D5		25	35	45	55	65	105
D6		100	130	145	190	185	240
MB		M5xP0.8x10	M6xP1.0x12	M8xP1.25x12	M10xP1.5x15	M12xP1.75x18	M16xP2.0x24
※ D7		35	50	60	68	76	111
※ MC		8-M5xP0.8x12	8-M5xP0.8x15	8-M6xP1.0x15	12-M6xP1.0x15	12-M8xP1.25x15	12-M8xP1.25x15
d		≤14	≤24	≤28	≤42	≤55	≤65
△ A		30~50	50~80	50~110	95~130	95~150	110~200
B		6	6	5	10	11	12
△ F		≤35	≤47.5	≤47.5	≤66.5	≤82.5	≤88.5

※ : The reducer output shaft can be customized in size and length for customers.

△ : The special size indicated by this symbol varies according to customer needs and servo motors.

Note 1 : The reverse output direction can be custom designed.

Note 2 : Three-stage is not in this table, please contact our sales if it is needed.

RAH series

13 ~ 15 ARC MIN / Technical Information

Specification	Stage	Ratio	RAH060	RAH090	RAH120	RAH150
Rated output torque (Nm)	1	3	40	140	260	500
		4	50	168	265	510
		5	44	166	265	510
		7	42	155	265	510
		10	40	140	260	500
	2	9	40	140	260	500
		12	40	140	260	500
		15	40	140	260	500
		16	50	168	265	510
		20	50	168	265	510
		21	40	140	260	500
		25	44	166	265	510
		28	42	155	265	510
		30	40	140	260	500
		35	42	155	265	510
		40	50	168	265	510
		49	42	155	265	510
		50	44	166	265	510
		70	42	155	265	510
	3	100	44	166	265	510
Instant maximum output torque (Nm)	1, 2, 3	3~100	3 times rated output torque			
Backlash (arc min)	1	3~10	≤13	≤13	≤13	≤13
	2	9~70	≤15	≤15	≤15	≤15
Maximum input speed (RPM)	1	3~10	7500	5500	4500	3500
	2	9~70	8000	6000	6000	6000
Use efficiency at full load (%)	1	3~10	≥94			
	2	9~70	≥92			
Noise value (dB) A	1, 2, 3	3~100	76	77	77	78
Service life (hrs) B			30000			
Operating temperature range (℃)			-15°C~+90°C			
Protection level			IP64			
Lubricating oil			Synthetic lubricating oil			

A. The smaller the reduction ratio or the higher the speed, the greater the noise value. (1500RPM, no load, reduction ratio=5)

B. The service life of continuous operation is 15,000 hours.

Note：Ratio100 uses three-stage (L3) style, and the strength is stronger than that at two-stage (L2).

Spiral Bevel
Gear Reducer

RAH series

13 ~ 15 ARC MIN / Technical Information

Specification		Stage	Ratio	RAH060	RAH090	RAH120	RAH150
Allowable radial force (N)		1, 2, 3	3~100	1600	2700	3100	4800
Allowable axial force (N)				800	1350	1550	2400
Weight (kg)	RAH - H	One-stage		3.3	9.8	13.2	27.4
		Two-stage		3.6	10.8	15.2	31.6
	RAH - S	One-stage		3.5	10.2	14.3	29.5
		Two-stage		3.8	11.2	16.4	34.4
	RAH - 2S	One-stage		3.5	10.4	14.6	30.4
		Two-stage		3.9	11.4	16.7	35.4
	RAH - D	One-stage		3.4	9.6	13.3	27.4
		Two-stage		3.7	10.6	15.3	31.8
	RAH - F	One-stage		3.5	10.2	13.5	27.9
		Two-stage		3.8	11.2	14.6	32.6
Moment of inertia (kg X cm²)		1	3	0.352	2.04	4.74	19.03
			4	0.215	1.25	2.98	11.66
			5	0.156	0.94	2.29	8.55
			7	0.112	0.71	1.80	7.00
			10	0.084	0.57	1.49	5.90
		2	9	0.155	1.01	2.85	12.79
			12	0.141	0.93	2.69	12.43
			15	0.132	0.90	2.58	12.24
			16	0.096	0.64	1.82	7.71
			20	0.080	0.55	1.55	6.81
			21	0.292	1.69	3.94	15.79
			25	0.078	0.54	1.52	5.91
			28	0.074	0.52	1.42	5.64
			30	0.066	0.47	1.31	5.32
			35	0.071	0.50	1.39	5.55
			40	0.065	0.47	1.31	5.32
			49	0.071	0.50	1.39	5.55
			50	0.064	0.47	1.30	5.14
			70	0.063	0.46	1.27	5.08
		3	100	0.075	0.53	1.49	5.82

Planetary Gear Reducer
Spiral Bevel Gear Reducer
Hollow Rotating Platform
Screw Lifting System

Spiral Bevel
Gear Reducer

RAH-H series

General Purpose Type / Hollow Shaft

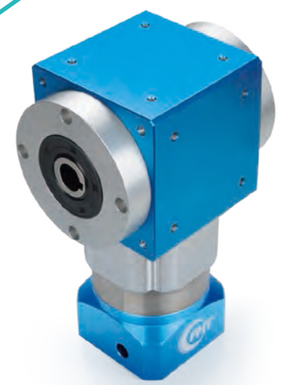

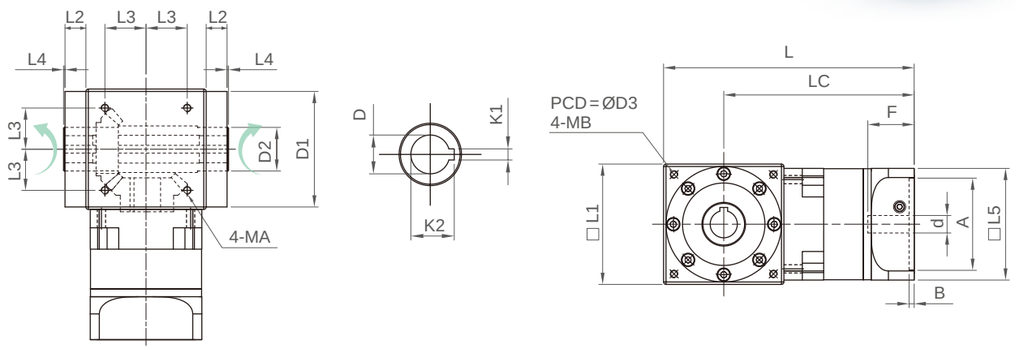

Unit: mm

Size		RAH060-H	RAH090-H	RAH120-H	RAH150-H
L1		83	114	124	154
L2		17	21.5	21.5	19
L3		28.284	33.587	38.89	45.962
MA		M5 x P0.8 x 10	M6 x P1.0 x 12	M8 x P1.25 x 12	M10 x P1.5 x 15
L4		1.5	1.5	1.5	1.5
L5		62	95	115	143
LC	One-stage	136	193.5	196.8	282
	Two-stage	153.5	219.5	224.8	334
L	One-stage	177.5	250.5	258.8	359
	Two-stage	195	276.5	286.8	411
D		16	20	28	40
D1		79	109	119	149
D2		25	35	45	55
D3		100	130	145	190
MB		M5 x P0.8 x 10	M6 x P1.0 x 12	M8 x P1.25 x 12	M10 x P1.5 x 15
K1		5	6	8	12
K2		18.3	22.8	31.3	43.3
d		≤14	≤24	≤28	≤42
△ A		30~50	50~80	50~110	95~130
B		6	8	5	10
△ F		≤32	≤40	≤47.5	≤66.5

△ : The special size indicated by this symbol varies according to customer needs and servo motors.

Note 1 : The reverse output direction can be custom designed.
Note 2 : Three-stage is not in this table, please contact our sales if it is needed.

Spiral Bevel
Gear Reducer

RAH-S series

General Purpose Type / Single Solid Shaft

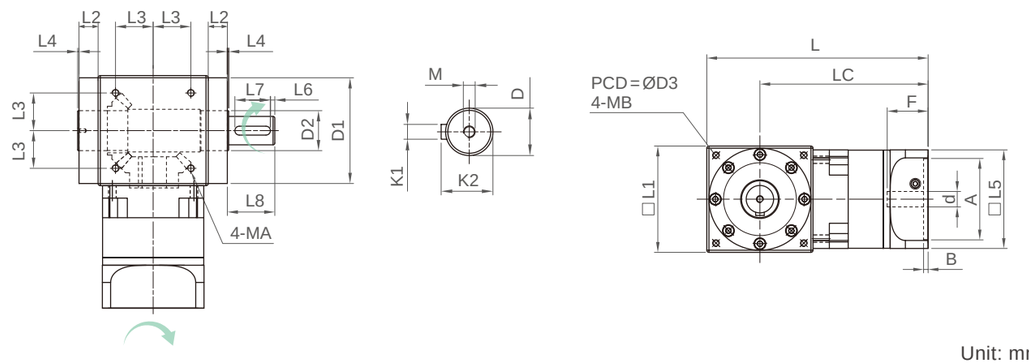

Unit: mm

Size		RAH060-S	RAH090-S	RAH120-S	RAH150-S
L1		83	114	124	154
L2		17	21.5	21.5	19
L3		28.284	33.587	38.89	45.962
MA		M5 x P0.8 x 10	M6 x P1.0 x 12	M8 x P1.25 x 12	M10 x P1.5 x 15
L4		1.5	1.5	1.5	1.5
L5		62	95	115	143
L6		3	5	5	5
L7		20	25	40	45
L8		27	49	52	67
LC	One-stage	136	193.5	196.8	282
	Two-stage	153.5	219.5	224.8	334
L	One-stage	177.5	250.5	258.8	359
	Two-stage	195	276.5	286.8	411
※ D		16	20	32	42
D1		79	109	119	149
D2		25	35	45	55
D3		100	130	145	190
MB		M5 x P0.8 x 10	M6 x P1.0 x 12	M8 x P1.25 x 12	M10 x P1.5 x 15
M		M4 x P0.7 x 10	M6 x P1.0 x 15	M8 x P1.25 x 20	M12 x P1.75 x 30
K1		5	6	10	12
K2		18	22.5	35	45
d		≤14	≤24	≤28	≤42
△ A		30~50	50~80	50~110	95~130
B		6	8	5	10
△ F		≤32	≤40	≤47.5	≤66.5

※ : The reducer output shaft can be customized in size and length for customers.
△ : The special size indicated by this symbol varies according to customer needs and servo motors.

Note 1 : The reverse output direction can be custom designed.
Note 2 : Three-stage is not in this table, please contact our sales if it is needed.

Spiral Bevel
Gear Reducer

RAH-2S series

General Purpose Type / Double Solid Shaft

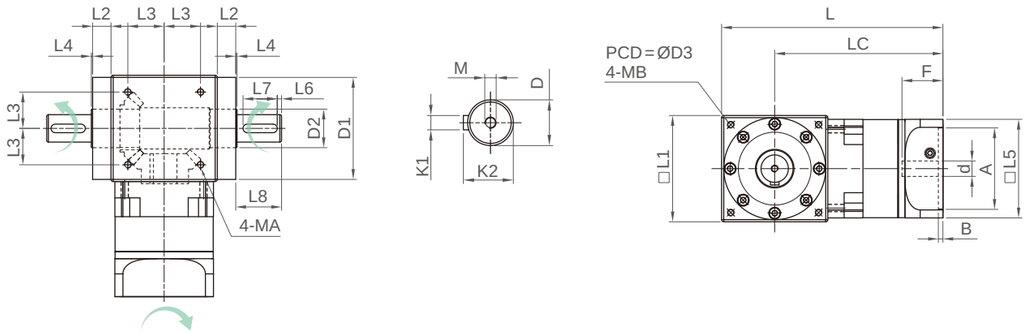

Unit: mm

Size		RAH060-2S	RAH090-2S	RAH120-2S	RAH150-2S
L1		83	114	124	154
L2		17	21.5	21.5	19
L3		28.284	33.587	38.89	45.962
MA		M5 x P0.8 x 10	M6 x P1.0 x 12	M8 x P1.25 x 12	M10 x P1.5 x 15
L4		1.5	1.5	1.5	1.5
L5		62	95	115	142
L6		3	5	5	5
L7		20	25	40	45
L8		27	49	52	67
LC	One-stage	136	193.5	196.8	282
	Two-stage	153.5	219.5	224.8	334
L	One-stage	177.5	250.5	258.8	359
	Two-stage	195	276.5	286.8	411
※ D		16	20	32	42
D1		79	109	119	149
D2		25	35	45	55
D3		100	130	145	190
MB		M5 x P0.8 x 10	M6 x P1.0 x 12	M8 x P1.25 x 12	M10 x P1.5 x 15
M		M4 x P0.7 x 10	M6 x P1.0 x 15	M8 x P1.25 x 20	M12 x P1.75 x 30
K1		5	6	10	12
K2		18	22.5	35	45
d		≤14	≤24	≤28	≤42
△ A		30~50	50~80	50~110	95~130
B		6	8	5	10
△ F		≤32	≤40	≤47.5	≤66.5

※：The reducer output shaft can be customized in size and length for customers.

△：The special size indicated by this symbol varies according to customer needs and servo motors.

Note 1：The reverse output direction can be custom designed. (If there is no special notice, make it in the same direction.)

Note 2：Three-stage is not in this table, please contact our sales if it is needed.

Spiral Bevel
Gear Reducer

RAH-D series

General Purpose Type / Clamp-on

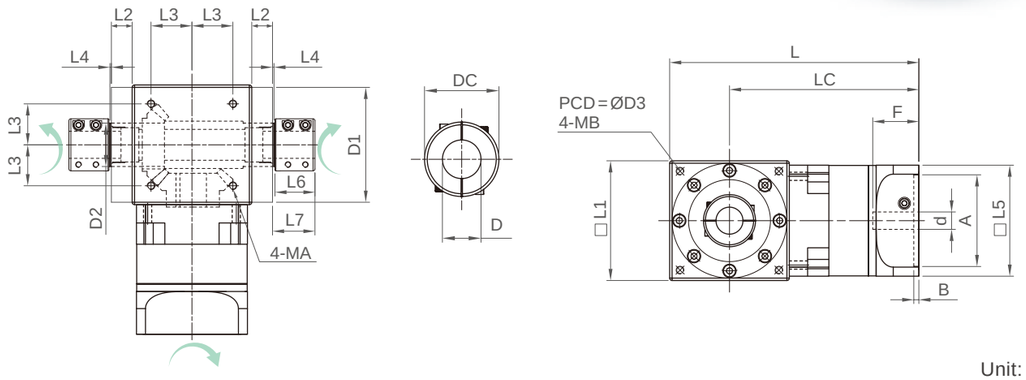

Unit: mm

Size		RAH060-D	RAH090-D	RAH120-D	RAH150-D
L1		83	114	124	154
L2		17	21.5	21.5	19
L3		28.284	33.587	38.89	45.962
MA		M5 x P0.8 x 10	M6 x P1.0 x 12	M8 x P1.25 x 12	M10 x P1.5 x 15
L4		1.5	1.5	1.5	1.5
L5		62	95	115	142
L6		33.5	33.5	42.5	42.5
L7		35	35	44	44
LC	One-stage	136	193.5	196.8	282
	Two-stage	153.5	219.5	224.8	334
L	One-stage	177.5	250.5	258.8	359
	Two-stage	195	276.5	286.8	411
DC		30	36	54	66
※ D		16	20	28	40
D1		79	109	119	149
D2		25	35	45	55
D3		100	130	145	190
MB		M5 x P0.8 x 10	M6 x P1.0 x 12	M8 x P1.25 x 12	M10 x P1.5 x 15
d		≤14	≤24	≤28	≤42
△ A		30~50	50~80	50~110	95~130
B		6	8	5	10
△ F		≤32	≤40	≤47.5	≤66.5

※：The reducer output shaft can be customized in size and length for customers.

△：The special size indicated by this symbol varies according to customer needs and servo motors.

Note 1：The reverse output direction can be custom designed.

Note 2：Three-stage is not in this table, please contact our sales if it is needed.

Spiral Bevel
Gear Reducer

RAH-F series

General Purpose Type / Flange Output Shaft

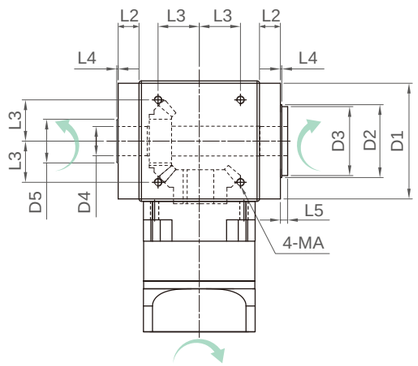

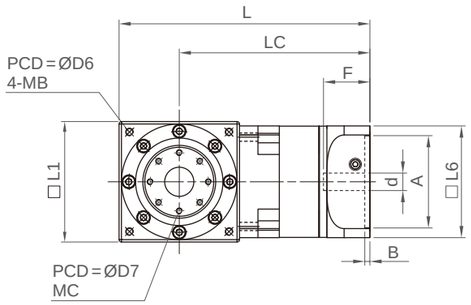

Unit: mm

Size		RAH060-F	RAH090-F	RAH120-F	RAH150-F
L1		83	114	124	154
L2		17	21.5	21.5	19
L3		28.284	33.587	38.89	45.962
MA		M5 x P0.8 x 10	M6 x P1.0 x 12	M8 x P1.25 x 12	M10 x P1.5 x 15
L4		1.5	1.5	1.5	1.5
L5		7.5	7.5	7.5	7.5
L6		62	95	115	142
LC	One-stage	136	193.5	196.8	282
	Two-stage	153.5	219.5	224.8	334
L	One-stage	177.5	250.5	258.8	359
	Two-stage	195	276.5	286.8	411
D1		79	109	119	149
D2		45	60	75	80
D3		44	59	71	79
D4		15	20	30	35
D5		25	35	45	55
D6		100	130	145	190
MB		M5 x P0.8 x 10	M6 x P1.0 x 12	M8 x P1.25 x 12	M10 x P1.5 x 15
※ D7		35	50	60	68
※ MC		8-M5 x P0.8 x 12	8-M5 x P0.8 x 15	8-M6 x P1.0 x 15	12-M6 x P1.0 x 15
d		≤14	≤24	≤28	≤42
△ A		30~50	50~80	50~110	95~130
B		6	6	5	10
△ F		≤32	≤40	≤47.5	≤66.5

※：The reducer output shaft can be customized in size and length for customers.
△：The special size indicated by this symbol varies according to customer needs and servo motors.

Note 1：The reverse output direction can be custom designed.
Note 2：Three-stage is not in this table, please contact our sales if it is needed.

Hollow Rotating Platform

▶ Product Description

This series (Hollow Rotary Platform, HRP) uses a hollow rotating work platform. Large disk equipment or robotic arms can be directly installed on the rotating disk. It has excellent accuracy and its compact structure design allows its installation in any position. It is widely used in sliding tables and mechanism with the need of hollow pipelines. It is suitable for applications in manufacturing, inspection, positioning, research, tracking and medical equipment. Servo motors or stepping motors can be selected based on the application requirements.

HRP series

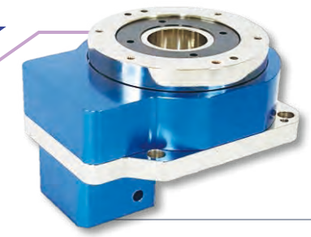

- Features: With deceleration function, it can be directly installed on the motor
- Accuracy: 10 ~ 15 arc sec (Repetition)
  1 arc min (Positioning)
- Size: 60, 100, 130, 200, 275
- Speed: 200 rpm (disk)
- Life: 15,000 ~ 20,000 hrs.

HRP-H series

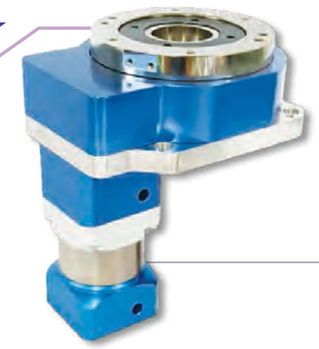

- Features: It can be used with a reducer based on the required reduction ratio, to provide a larger reduction ratio
- Accuracy: 10 ~ 15 arc sec (Repetition)
  1 ~ 2 arc min (Positioning)
- Size: 60, 100, 130, 200, 275
- Speed: 200 rpm (disk)
- Life: 15,000 ~ 20,000 hrs.

▶ Model Description

HRP060	H	15	D1-D2-D3-D4 (L1/L2)
Model	Connection type	Ratio	Motor Dimensions
HRP060 HRP100 HRP130 HRP200 HRP275	H With reducer Blank Without reducer	Demand reduction ratio	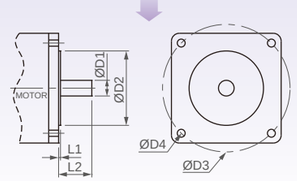

Advantages of Hollow Rotating Platform

HRP-130 series

The hollow rotating platform has a reduction mechanism inside, and each size provides a specific reduction ratio. If a large ratio is required, HRP-H series is available for selection. This series is a combination product of hollow rotating platform and the Planetary Gear Reducer, combining HRP and DH series reducers, to meet the needs of various reduction ratios.

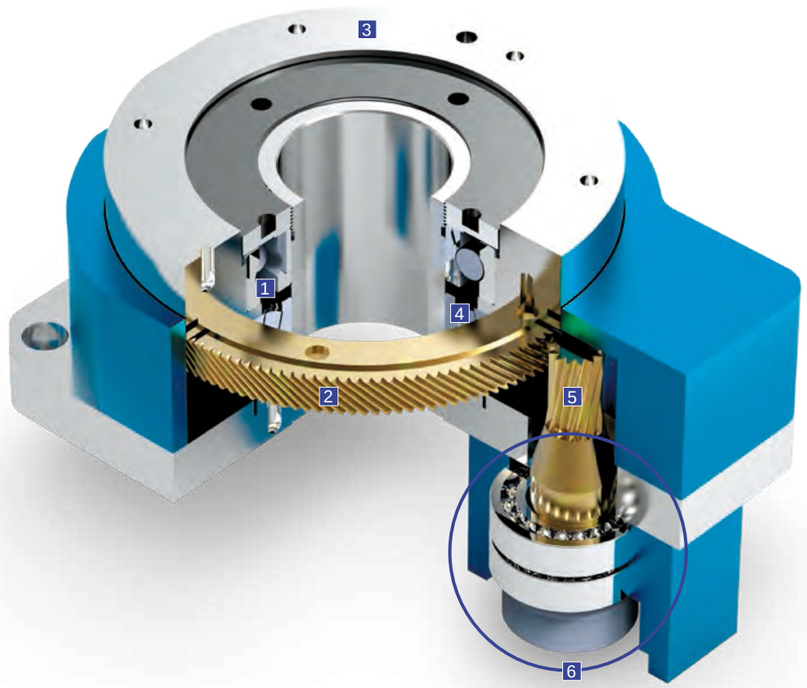

1 Deep groove ball bearing

2 Gear — The deceleration design uses precision gears with a dedicated calibration mechanism to eliminate backlash.

3 Output platform — Helical gear structure inside

4 Tapered roller bearing

5 Pinion

6 Bolted input shaft — The input end is a customized connecting plate

HRP-275 series

Features

- Built-in reduction ratio
- Good positioning accuracy (≤1 arc minute)
- Stable operation and precision positioning under inertial load
- Design of Large Hollow Rotating Disk Surface
- The work platform can match directly to the workpiece to increase convenience
- Easy to install and save space
- Can meet the mechanistic requirements of wiring (pipe)
- Motor or reducer can be used together, providing you with multiple options

Scope of Applications

- Index plate
- Optical inspection equipment
- Applications of bending moment load, such as pick and place system
- High-precision positioning equipment, such as material handling platform

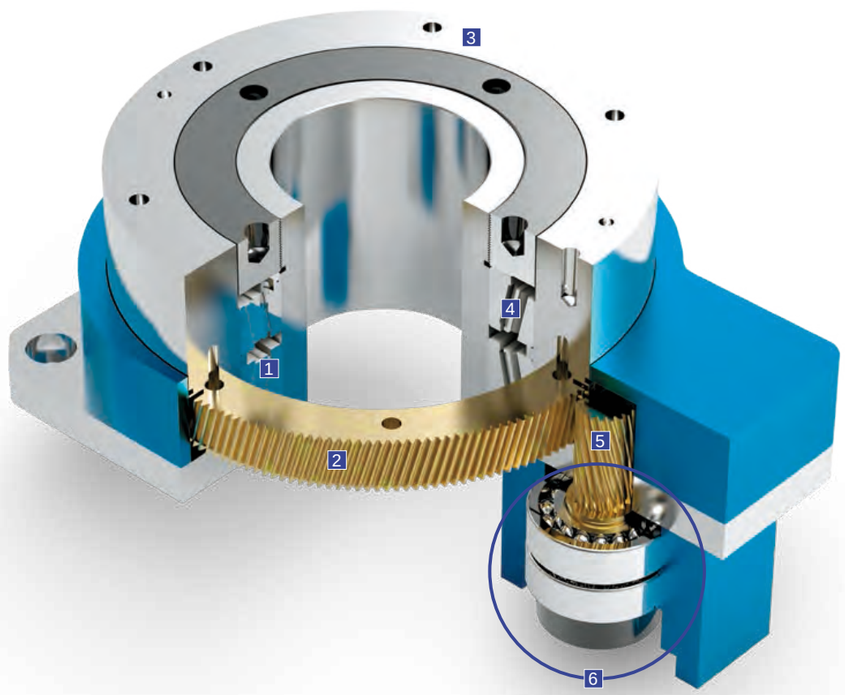

1 Tapered roller bearing

2 Gear — The repetition accuracy is 10-15 arc seconds, and the positioning accuracy can reach 1 arc minute, which is a desirable option for precision positioning applications

3 Output platform — It can be used in the place that needs overpass pipelines, and the plane can be directly combined with various platforms

4 Tapered roller bearing

5 Pinion

6 Bolted input shaft — Servo motor, stepping motor or planetary gear reducer can be installed at the input end

▶ HRP060

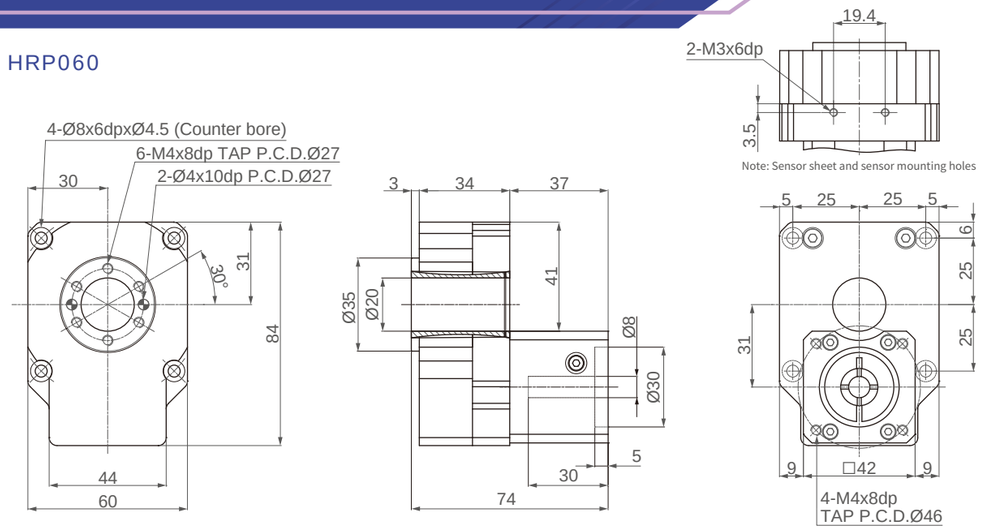

▶ HRP060-H

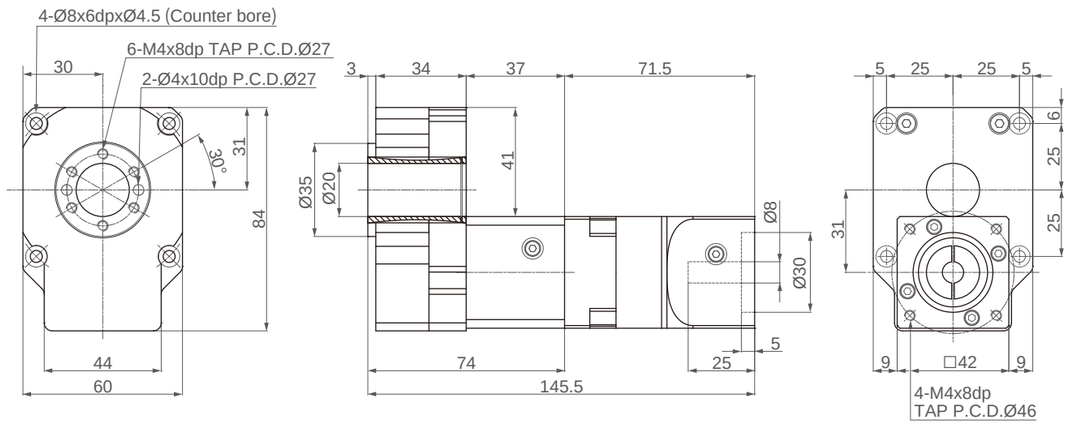

Product model	HRP060	HRP060-H
Rotating platform bearing	◎ Deep groove ball bearing	◎ Thrust roller bearing
Rated output torque (Nm)	5	
Allowable thrust load (kgf)	20	
Accuracy life (hrs.)	15000	
Allowable output speed (RPM)	200 (disk)	
Ratio	5	15, 20, 25, 35, 50
Repetition accuracy (arc sec)	≤15	≤70
Positioning accuracy (arc min)	≤1	≤1
Parallelism of rotating platform (mm)	≤0.02	
Concentricity of rotating platform (mm)	≤0.02	
Protection level	IP40	
Weight (kg)	1	1.4

▶ HRP100

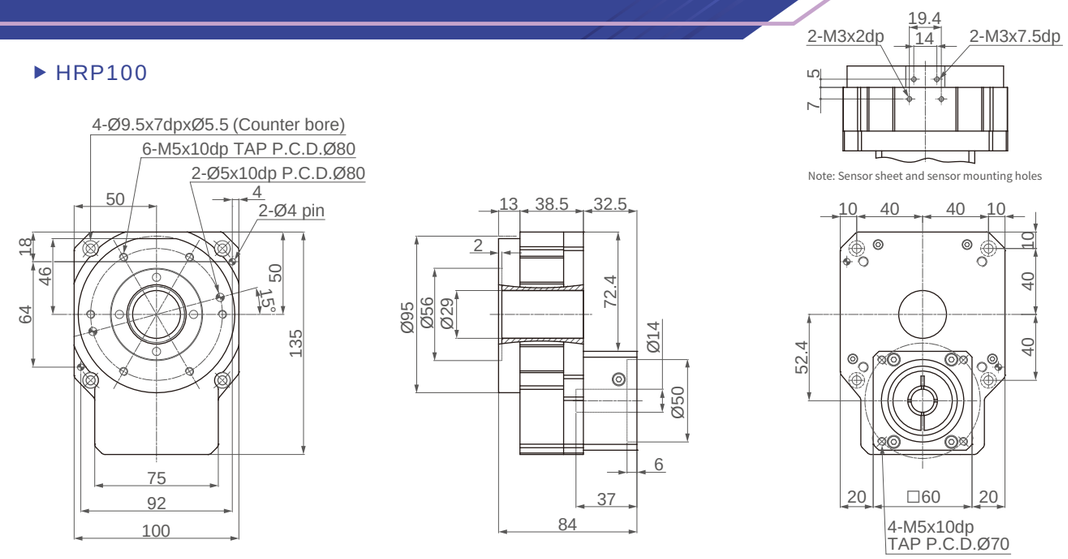

▶ HRP100-H

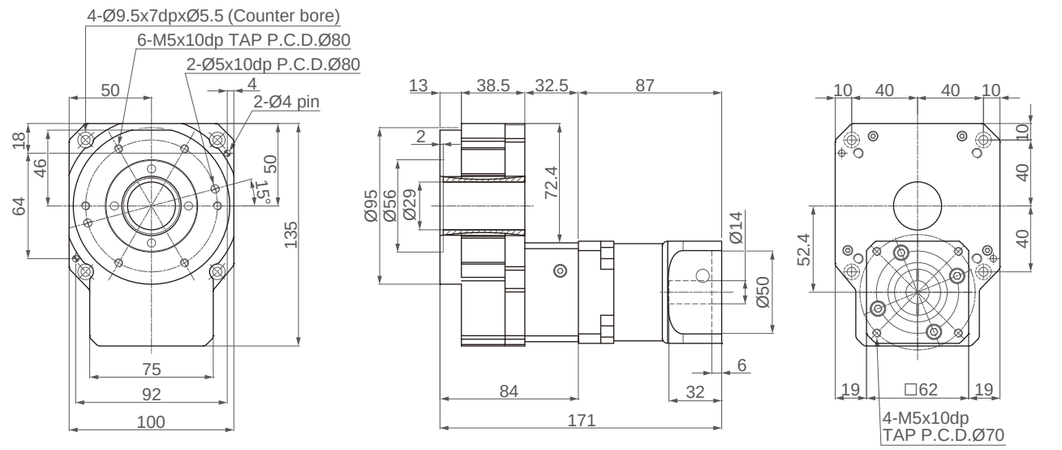

Product model	HRP100	HRP100-H
Rotating platform bearing	◎ Tapered roller bearing	◎ Deep groove ball bearing
Rated output torque (Nm)	45	
Allowable thrust load (kgf)	200	
Accuracy life (hrs.)	20000	
Allowable output speed (RPM)	200 (disk)	
Ratio	8	24, 32, 40, 56, 80
Repetition accuracy (arc sec)	≤10	≤60
Positioning accuracy (arc min)	≤1	≤2
Parallelism of rotating platform (mm)	≤0.02	
Concentricity of rotating platform (mm)	≤0.015	
Protection level	IP40	
Weight (kg)	3	4.3

HRP 130/130-H series

Technical Information

▶ HRP130

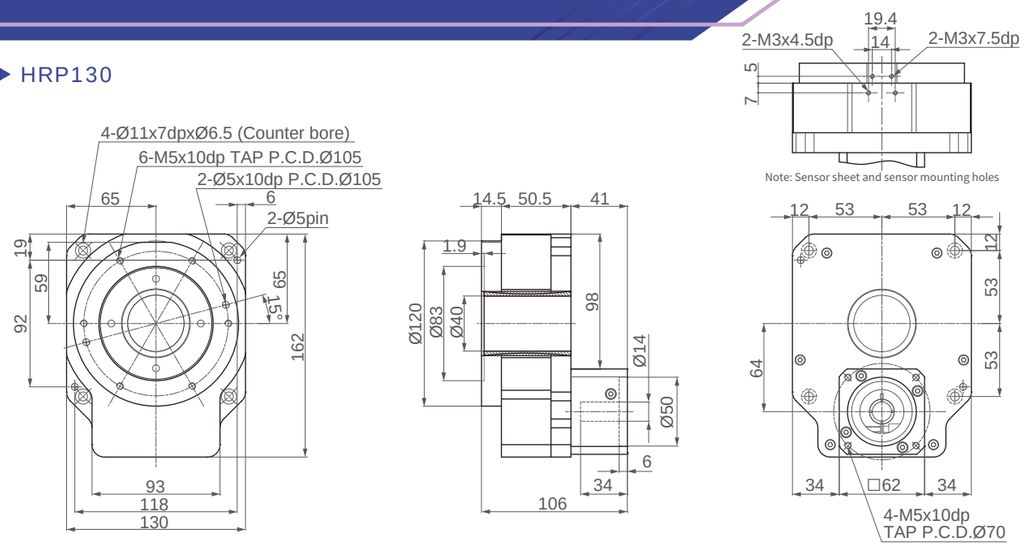

▶ HRP130-H

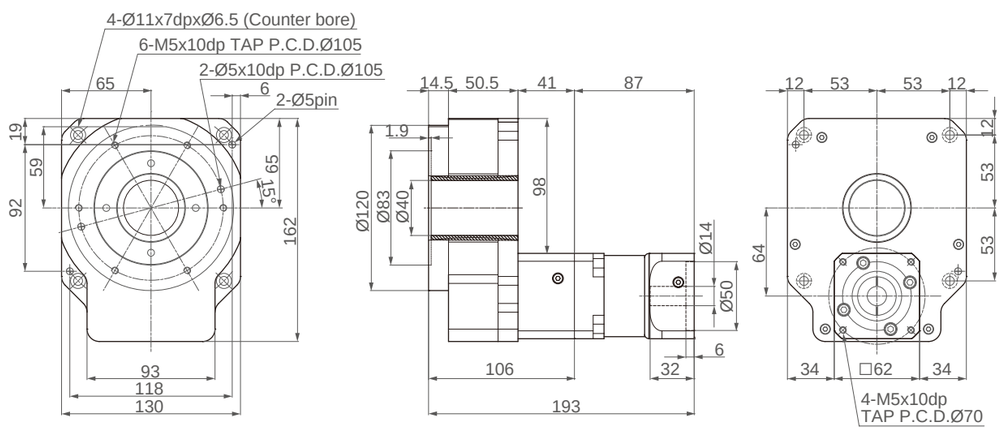

Product model	HRP130	HRP130-H
Rotating platform bearing	◎ Tapered roller bearing	◎ Deep groove ball bearing
Rated output torque (Nm)	45	
Allowable thrust load (kgf)	200	
Accuracy life (hrs.)	20000	
Allowable output speed (RPM)	200 (disk)	
Ratio	10	30, 40, 50, 70, 100
Repetition accuracy (arc sec)	≤10	≤60
Positioning accuracy (arc min)	≤1	≤2
Parallelism of rotating platform (mm)	≤0.02	
Concentricity of rotating platform (mm)	≤0.015	
Protection level	IP40	
Weight (kg)	5.6	6.9

HRP 200/200-H series

Technical Information

▶ HRP200

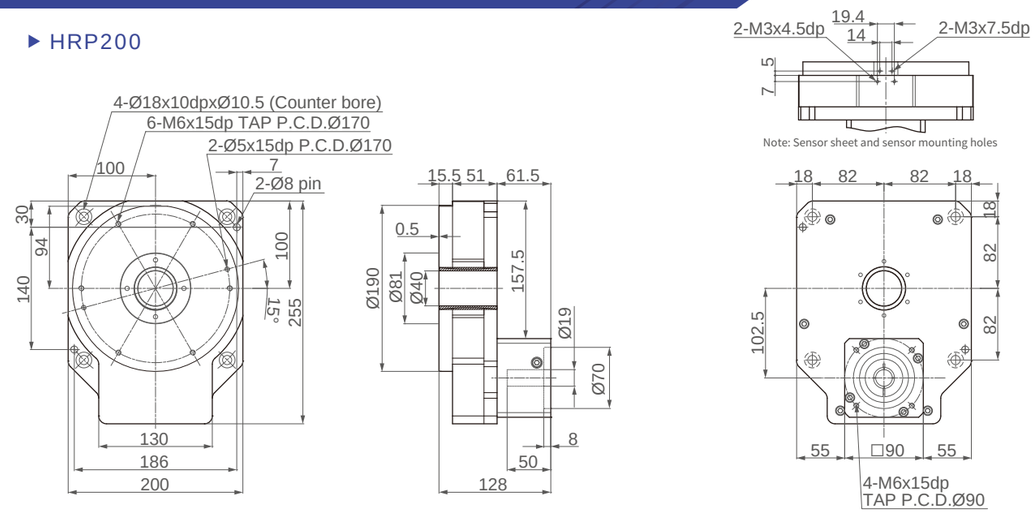

▶ HRP200-H

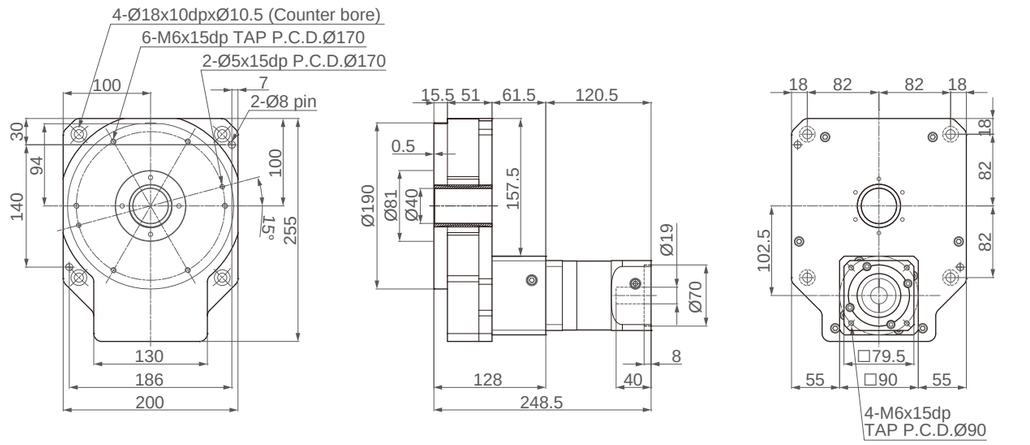

Product model	HRP200	HRP200-H
Rotating platform bearing	◎ Tapered roller bearing	
Rated output torque (Nm)	80	
Allowable thrust load (kgf)	500	
Accuracy life (hrs.)	20000	
Allowable output speed (RPM)	200 (disk)	
Ratio	10	30, 40, 50, 70, 100
Repetition accuracy (arc sec)	≤10	≤60
Positioning accuracy (arc min)	≤1	≤2
Parallelism of rotating platform (mm)	≤0.02	
Concentricity of rotating platform (mm)	≤0.015	
Protection level	IP40	
Weight (kg)	17.1	20.6

▶ HRP275

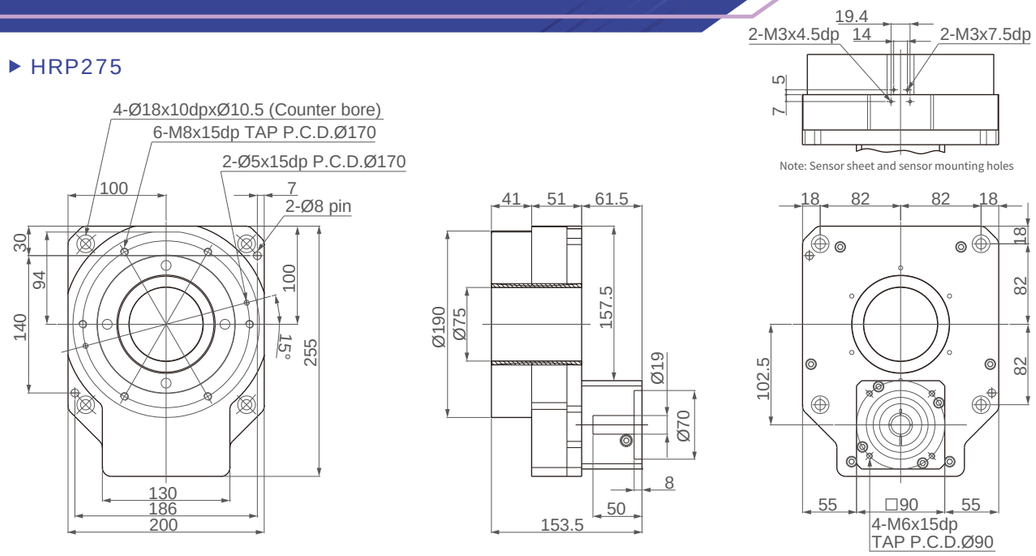

▶ HRP275-H

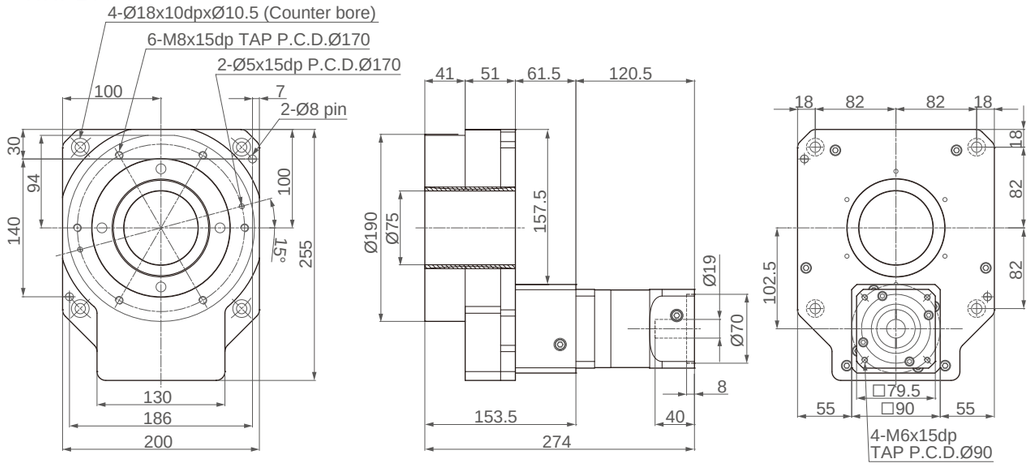

Product model	HRP275	HRP275-H
Rotating platform bearing	◎ Tapered roller bearing	
Rated output torque (Nm)	80	
Allowable thrust load (kgf)	800	
Accuracy life (hrs.)	20000	
Allowable output speed (RPM)	200 (disk)	
Ratio	10	30, 40, 50, 70, 100
Repetition accuracy (arc sec)	≤ 10	≤ 60
Positioning accuracy (arc min)	≤ 1	≤ 2
Parallelism of rotating platform (mm)	≤ 0.02	
Concentricity of rotating platform (mm)	≤ 0.015	
Protection level	IP40	
Weight (kg)	20.5	24

Screw Lifting System

▶ Product Description

This product is suitable for industries with vertical lifting requirements such as chips, panels, warehousing, and return lines. It can replace traditional pneumatic cylinders and worm equipment, while achieving multi-level and precision control; through steering equipment, single-screw products can be expanded to four-screw, six-screw, even eight-screw. Each type can be adjusted based on customer needs, so optimization among space, cost and accuracy can be achieved.

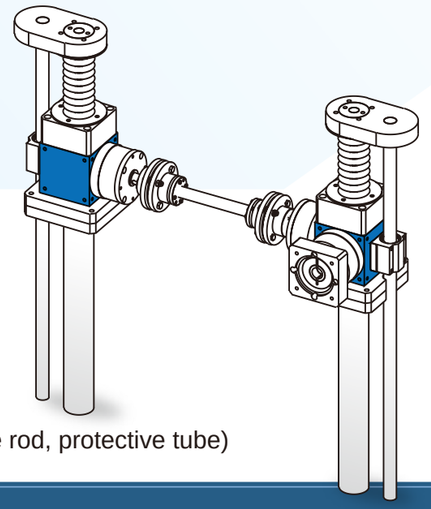

Two-screw

(Optional top plate, linear guide rod, protective tube)

RA110-2-BF-R-B-400-ACD

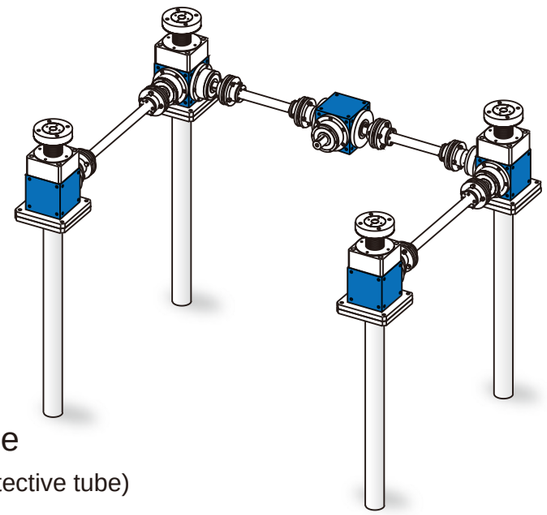

Four-screw U-type

(Optional top plate, protective tube)

RA110-4U-AS-R-B-400-AD

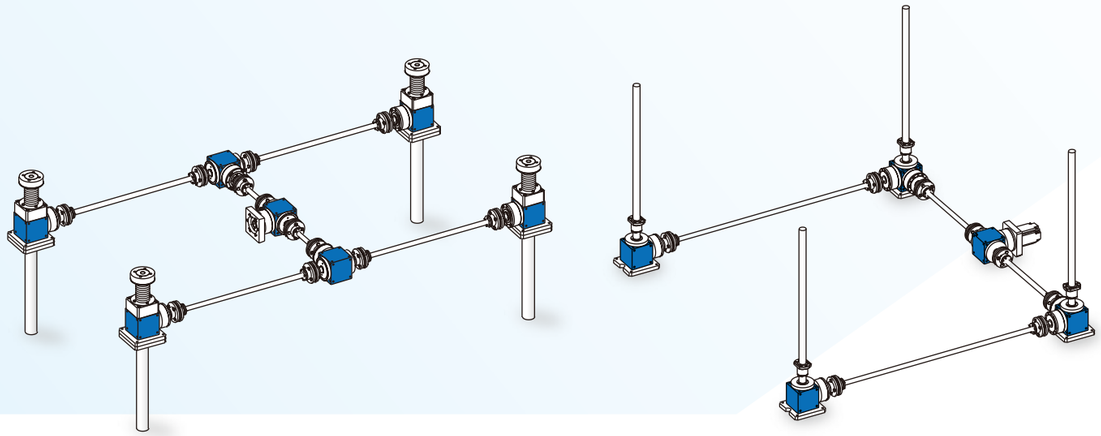

Four-screw H-type
(Optional top plate, protective tube)

RA110-4H-AF-R-B-400-AD

Four-screw U-type
(Travelling nut)

RA110-4U-AF-R-H-0

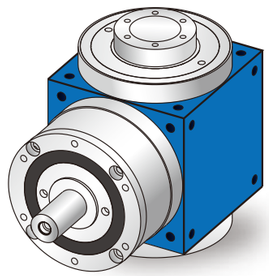

Single-screw
(Travelling screw)

RA110-1-BS-R-B-0

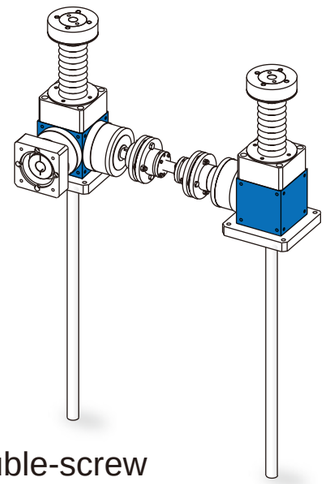

Double-screw
(Optional top plate)

RA110-2B-BF-R-B-400-A

Four-screw U-shaped lift
(Optional top plate,
protective tube, linear guide rod)

RA110-4U-AF-R-B-400-ACD

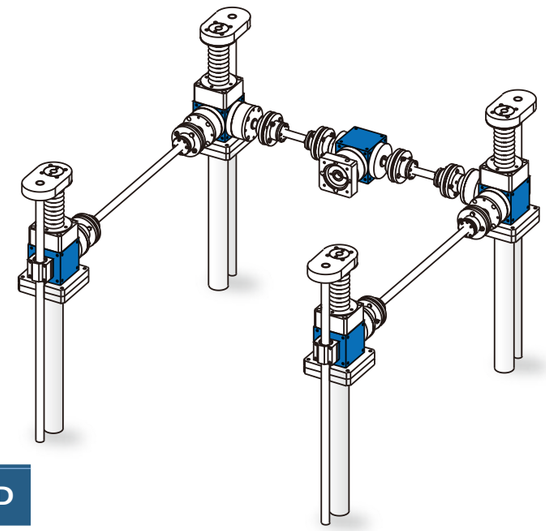

Single-screw lift
(Including top plate)

RA110-1-BG-R-B-400-A

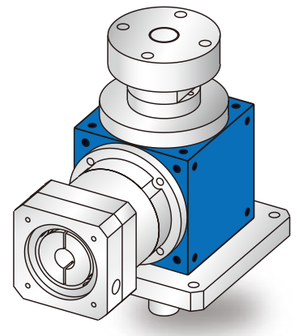

Single-screw lift
(Travelling Nut)

RA110-1-BF-R-H-0

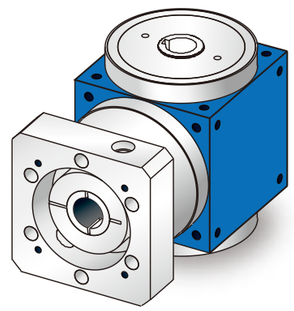

Bevel Gear Screw Lifting System

RA110	4H	BF	10	B	400	ACD	14	50	70	M5
1	23	45	6	7	8	9	10	11	12	13

Model Description

1. Frame size: RA065-RA210
2. Number of screw: 1, 2, 4, 6, 8 screws
3. Configuration style: H-type, U-type (no need to fill in one and two screws)
4. Enter position: Set in the middle (A), Side (B)
5. Input style: Flange type (F), Solid shaft (S), Reducer (G)
6. Ratio: 2~50 ratio
7. Output style: Rotating screw (H), Rotating nut (B)
8. Range of motion: Below 1000mm
9. Accessories: Top plate (A), Linear guide rod (C), Protective tube (D)
10. Motor shaft diameter
11. Motor pilot diameter
12. Motor bolt circle diameter
13. Motor bolt hole diameter

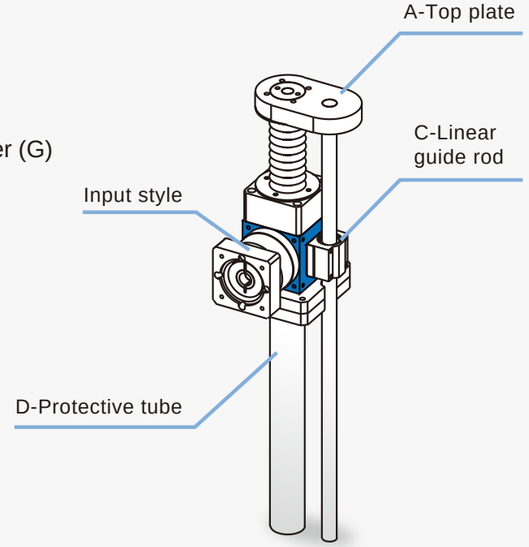

Select Parameters	1.Load : (kg)	2.Range of motion : (mm)
	3.Moving speed : (mm/sec)	4.Center span : (mm)

☐ One-screw ☐ Two-screw ☐ Four-screw (U-type) ☐ Four-screw (H-type)

MEMO

MEMO

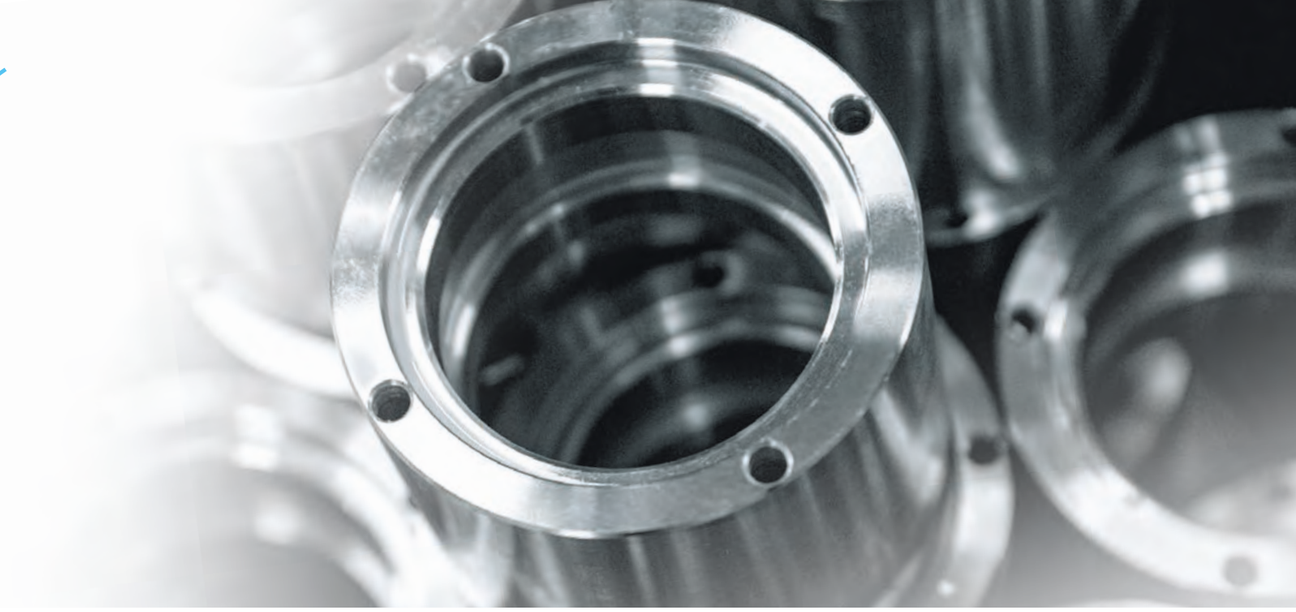

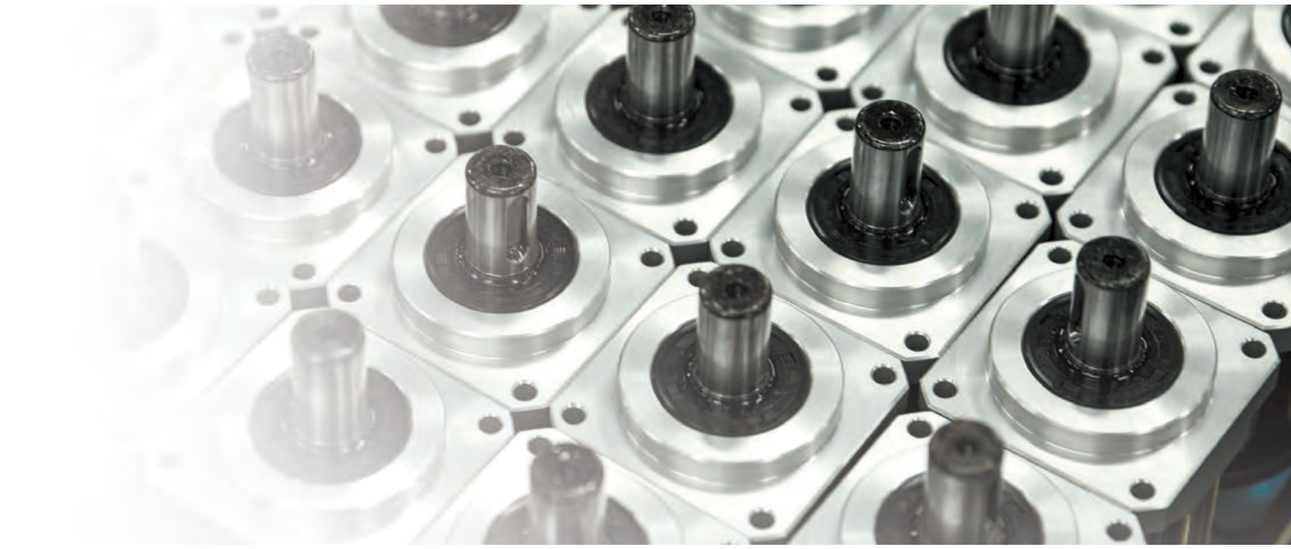

Distributors for Australia & New Zealand

MOTION TECHNOLOGIES PTY LIMITED

24/22-30 Northumberland Road
Caringbah NSW 2229 Australia
Phone: (02) 9524 4782

sales@motiontech.com.au
www.motiontech.com.au

© 10/03/2023